OM-2213 181 254H

February 2001

Processes

Invision 456P:

MIG (GMAW) and Pulsed MIG (GMAW-P) Welding

Flux Cored (FCAW) Welding

Phoenix 456 CC/CV:

Multiprocess Welding

Description

Invision 456P:

3 Phase DC CV

Phoenix 456 CC/CV:

3 Phase DC CC CV

Invision® 456P And Phoenix® 456 CC/CV (230/460 And 575 Volt Models)

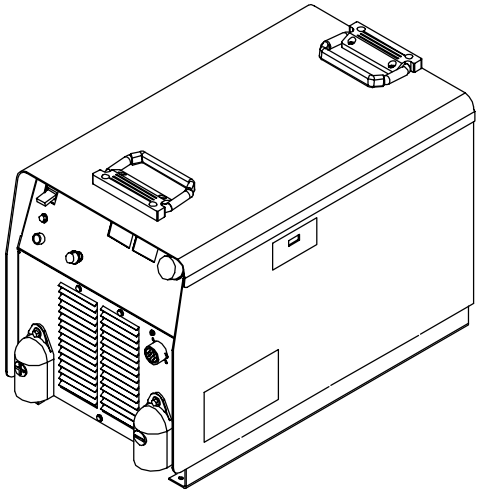

OWNER'S MANUAL

Visit our website at

www.MillerWelds.com

From Miller to You

Thank you and *congratulations* on choosing Miller. Now you can get the job done and get it done right. We know you don't have time to do it any other way.

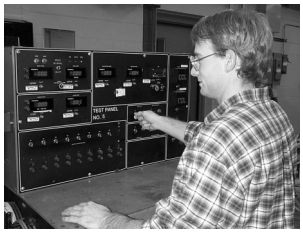

That's why when Niels Miller first started building arc welders in 1929, he made sure his products offered long-lasting value and superior quality. Like you, his customers couldn't afford anything less. Miller products had to be more than the best they could be. They had to be the best you could buy.

Today, the people that build and sell Miller products continue the tradition. They're just as committed to providing equipment and service that meets the high standards of quality and value established in 1929.

This Owner's Manual is designed to help you get the most out of your Miller products. Please take time to read the Safety precautions. They will help you protect yourself against potential hazards on the worksite. We've made installation and operation quick and easy. With Miller you can count on years of reliable service with proper maintenance. And if for some reason the unit needs repair, there's a Troubleshooting section that will help you figure out what the problem is. The parts list will then help you to decide which exact part you may need to fix the problem. Warranty and service information for your particular model are also provided.

ISO 9001 REGISTERED QUALITY SYSTEM

Miller is the first welding equipment manufacturer in the U.S.A. to be registered to the ISO 9001 Quality System Standard.

TRUE BLUE® WARRANTY

Working as hard as you do – every power source from Miller is backed by the most hassle-free warranty in the business.

Miller offers a Technical Manual which provides more detailed service and parts information for your unit. To obtain a Technical Manual, contact your local distributor. Your distributor can also supply you with Welding Process Manuals such as SMAW, GTAW, GMAW, and GMAW-P.

Miller Electric manufactures a full line of welders and welding related equipment. For information on other quality Miller products, contact your local Miller distributor to receive the latest full line catalog or individual catalog sheets. **To locate your nearest distributor or service agency call 1-800-4-A-Miller, or visit us at www.MillerWelds.com on the web.**

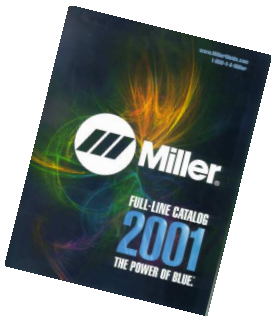

Miller
The Power of Blue.

TABLE OF CONTENTS

SECTION 1 – SAFETY PRECAUTIONS - READ BEFORE USING 1
1-1. Symbol Usage 1
1-2. Arc Welding Hazards 1
1-3. Additional Symbols for Installation, Operation, and Maintenance 3
1-4. Principal Safety Standards 3
1-5. EMF Information 4
SECTION 1 – SAFETY PRECAUTIONS - READ BEFORE USING 1
1-1. Symbol Usage 1
1-2. Arc Welding Hazards 1
1-3. Additional Symbols For Installation, Operation, And Maintenance 3
1-4. Principal Safety Standards 3
1-5. EMF Information 4
SECTION 1 – CONSIGNES DE SECURITE – LIRE AVANT UTILISATION 5
1-1. Signification des symboles 5
1-2. Dangers relatifs au soudage à l'arc 5
1-3. Dangers supplémentaires en relation avec l'installation, le fonctionnement et la maintenance 7
1-4. Principales normes de sécurité 8
1-5. Information sur les champs électromagnétiques 8
SECTION 2 – INSTALLATION 9
2-1. Specifications 9
2-2. Duty Cycle and Overheating 9
2-3. Volt-Ampere Curves 10
2-4. Dimensions And Weight 10
2-5. Selecting a Location 11
2-6. Weld Output Terminals and Selecting Cable Sizes 11
2-7. Remote 14 Receptacle Information 12
2-8. 115 Volts AC Duplex Receptacle And Circuit Breakers 13
2-9. Electrical Service Guide 13
2-10. Selecting Input Voltage (230/460 Volt Models Only) 14
2-11. Connecting Input Power 15
SECTION 3 – OPERATION 16
3-1. Front Panel Controls For Invision 456P 16
3-2. Mode and Voltage Control For Invision 456P 16
3-3. Meter Functions For Invision 456P 17
3-4. Front Panel Controls For Phoenix 456 CC/CV 17
3-5. Meter Functions For Phoenix 456 CC/CV 18
3-6. Mode Switch Settings For Phoenix 456 CC/CV 18
3-7. Lift-Arc TIG Procedure For Phoenix 456 CC/CV 19
SECTION 4 – MAINTENANCE AND TROUBLESHOOTING 20
4-1. Routine Maintenance 20
4-2. Blowing Out Inside of Unit 20
4-3. Removing Right Side Panel and Measuring Input Capacitor Voltage In 230/460 Volt Models 21
4-4. Removing Right Side Panel and Measuring Input Capacitor Voltage in 575 Volt Models . . . 22
4-5. Voltmeter/Ammeter Help Displays 23
4-6. Troubleshooting 24
SECTION 5 – ELECTRICAL DIAGRAM 26
SECTION 6 – PARTS LIST 30

⚠ WARNING

This product, when used for welding or cutting, produces fumes or gases which contain chemicals known to the State of California to cause birth defects and, in some cases, cancer. (California Health & Safety Code Section 25249.5 et seq.)

SECTION 1 – SAFETY PRECAUTIONS - READ BEFORE USING

1-1. Symbol Usage

Means Warning! Watch Out! There are possible hazards with this procedure! The possible hazards are shown in the adjoining symbols.

▲ **Marks a special safety message.**

☞ *Means "Note"; not safety related.*

This group of symbols means Warning! Watch Out! possible ELECTRIC SHOCK, MOVING PARTS, and HOT PARTS hazards. Consult symbols and related instructions below for necessary actions to avoid the hazards.

1-2. Arc Welding Hazards

▲ **The symbols shown below are used throughout this manual to call attention to and identify possible hazards. When you see the symbol, watch out, and follow the related instructions to avoid the hazard. The safety information given below is only a summary of the more complete safety information found in the Safety Standards listed in Section 1-4. Read and follow all Safety Standards.**

▲ **Only qualified persons should install, operate, maintain, and repair this unit.**

▲ **During operation, keep everybody, especially children, away.**

ELECTRIC SHOCK can kill.

Touching live electrical parts can cause fatal shocks or severe burns. The electrode and work circuit is electrically live whenever the output is on. The input power circuit and machine internal circuits are also live when power is on. In semiautomatic or automatic wire welding, the wire, wire reel, drive roll housing, and all metal parts touching the welding wire are electrically live. Incorrectly installed or improperly grounded equipment is a hazard.

- Do not touch live electrical parts.
- Wear dry, hole-free insulating gloves and body protection.
- Insulate yourself from work and ground using dry insulating mats or covers big enough to prevent any physical contact with the work or ground.
- Do not use AC output in damp areas, if movement is confined, or if there is a danger of falling.
- Use AC output ONLY if required for the welding process.
- If AC output is required, use remote output control if present on unit.
- Disconnect input power or stop engine before installing or servicing this equipment. Lockout/tagout input power according to OSHA 29 CFR 1910.147 (see Safety Standards).
- Properly install and ground this equipment according to its Owner's Manual and national, state, and local codes.
- Always verify the supply ground – check and be sure that input power cord ground wire is properly connected to ground terminal in disconnect box or that cord plug is connected to a properly grounded receptacle outlet.
- When making input connections, attach proper grounding conductor first – double-check connections.
- Frequently inspect input power cord for damage or bare wiring – replace cord immediately if damaged – bare wiring can kill.
- Turn off all equipment when not in use.
- Do not use worn, damaged, undersized, or poorly spliced cables.
- Do not drape cables over your body.
- If earth grounding of the workpiece is required, ground it directly with a separate cable.
- Do not touch electrode if you are in contact with the work, ground, or another electrode from a different machine.
- Use only well-maintained equipment. Repair or replace damaged parts at once. Maintain unit according to manual.
- Wear a safety harness if working above floor level.
- Keep all panels and covers securely in place.
- Clamp work cable with good metal-to-metal contact to workpiece or worktable as near the weld as practical.
- Insulate work clamp when not connected to workpiece to prevent contact with any metal object.
- Do not connect more than one electrode or work cable to any single weld output terminal.

SIGNIFICANT DC VOLTAGE exists after removal of input power on inverters.

- Turn Off inverter, disconnect input power, and discharge input capacitors according to instructions in Maintenance Section before touching any parts.

FUMES AND GASES can be hazardous.

Welding produces fumes and gases. Breathing these fumes and gases can be hazardous to your health.

- Keep your head out of the fumes. Do not breathe the fumes.
- If inside, ventilate the area and/or use exhaust at the arc to remove welding fumes and gases.
- If ventilation is poor, use an approved air-supplied respirator.
- Read the Material Safety Data Sheets (MSDSs) and the manufacturer's instructions for metals, consumables, coatings, cleaners, and degreasers.
- Work in a confined space only if it is well ventilated, or while wearing an air-supplied respirator. Always have a trained watchperson nearby. Welding fumes and gases can displace air and lower the oxygen level causing injury or death. Be sure the breathing air is safe.
- Do not weld in locations near degreasing, cleaning, or spraying operations. The heat and rays of the arc can react with vapors to form highly toxic and irritating gases.
- Do not weld on coated metals, such as galvanized, lead, or cadmium plated steel, unless the coating is removed from the weld area, the area is well ventilated, and if necessary, while wearing an air-supplied respirator. The coatings and any metals containing these elements can give off toxic fumes if welded.

ARC RAYS can burn eyes and skin.

Arc rays from the welding process produce intense visible and invisible (ultraviolet and infrared) rays that can burn eyes and skin. Sparks fly off from the weld.

- Wear a welding helmet fitted with a proper shade of filter to protect your face and eyes when welding or watching (see ANSI Z49.1 and Z87.1 listed in Safety Standards).
- Wear approved safety glasses with side shields under your helmet.
- Use protective screens or barriers to protect others from flash and glare; warn others not to watch the arc.
- Wear protective clothing made from durable, flame-resistant material (leather and wool) and foot protection.

WELDING can cause fire or explosion.

Welding on closed containers, such as tanks, drums, or pipes, can cause them to blow up. Sparks can fly off from the welding arc. The flying sparks, hot workpiece, and hot equipment can cause fires and burns. Accidental contact of electrode to metal objects can cause sparks, explosion, overheating, or fire. Check and be sure the area is safe before doing any welding.

- Protect yourself and others from flying sparks and hot metal.
- Do not weld where flying sparks can strike flammable material.
- Remove all flammables within 35 ft (10.7 m) of the welding arc. If this is not possible, tightly cover them with approved covers.
- Be alert that welding sparks and hot materials from welding can easily go through small cracks and openings to adjacent areas.
- Watch for fire, and keep a fire extinguisher nearby.
- Be aware that welding on a ceiling, floor, bulkhead, or partition can cause fire on the hidden side.
- Do not weld on closed containers such as tanks, drums, or pipes, unless they are properly prepared according to AWS F4.1 (see Safety Standards).
- Connect work cable to the work as close to the welding area as practical to prevent welding current from traveling long, possibly unknown paths and causing electric shock and fire hazards.
- Do not use welder to thaw frozen pipes.
- Remove stick electrode from holder or cut off welding wire at contact tip when not in use.
- Wear oil-free protective garments such as leather gloves, heavy shirt, cuffless trousers, high shoes, and a cap.
- Remove any combustibles, such as a butane lighter or matches, from your person before doing any welding.

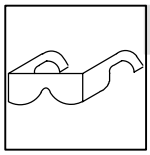

FLYING METAL can injure eyes.

- Welding, chipping, wire brushing, and grinding cause sparks and flying metal. As welds cool, they can throw off slag.
- Wear approved safety glasses with side shields even under your welding helmet.

BUILDUP OF GAS can injure or kill.

- Shut off shielding gas supply when not in use.
- Always ventilate confined spaces or use approved air-supplied respirator.

HOT PARTS can cause severe burns.

- Do not touch hot parts bare handed.
- Allow cooling period before working on gun or torch.

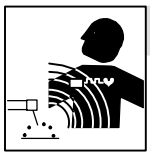

MAGNETIC FIELDS can affect pacemakers.

- Pacemaker wearers keep away.
- Wearers should consult their doctor before going near arc welding, gouging, or spot welding operations.

NOISE can damage hearing.

Noise from some processes or equipment can damage hearing.

- Wear approved ear protection if noise level is high.

CYLINDERS can explode if damaged.

Shielding gas cylinders contain gas under high pressure. If damaged, a cylinder can explode. Since gas cylinders are normally part of the welding process, be sure to treat them carefully.

- Protect compressed gas cylinders from excessive heat, mechanical shocks, slag, open flames, sparks, and arcs.
- Install cylinders in an upright position by securing to a stationary support or cylinder rack to prevent falling or tipping.
- Keep cylinders away from any welding or other electrical circuits.
- Never drape a welding torch over a gas cylinder.
- Never allow a welding electrode to touch any cylinder.
- Never weld on a pressurized cylinder – explosion will result.
- Use only correct shielding gas cylinders, regulators, hoses, and fittings designed for the specific application; maintain them and associated parts in good condition.
- Turn face away from valve outlet when opening cylinder valve.
- Keep protective cap in place over valve except when cylinder is in use or connected for use.
- Read and follow instructions on compressed gas cylinders, associated equipment, and CGA publication P-1 listed in Safety Standards.

1-3. Additional Symbols For Installation, Operation, And Maintenance

FIRE OR EXPLOSION hazard.

- Do not install or place unit on, over, or near combustible surfaces.
- Do not install unit near flammables.
- Do not overload building wiring – be sure power supply system is properly sized, rated, and protected to handle this unit.

FALLING UNIT can cause injury.

- Use lifting eye to lift unit only, NOT running gear, gas cylinders, or any other accessories.
- Use equipment of adequate capacity to lift and support unit.
- If using lift forks to move unit, be sure forks are long enough to extend beyond opposite side of unit.

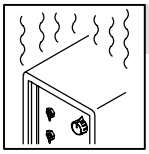

OVERUSE can cause OVERHEATING

- Allow cooling period; follow rated duty cycle.
- Reduce current or reduce duty cycle before starting to weld again.
- Do not block or filter airflow to unit.

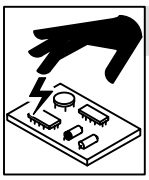

STATIC (ESD) can damage PC boards.

- Put on grounded wrist strap BEFORE handling boards or parts.
- Use proper static-proof bags and boxes to store, move, or ship PC boards.

MOVING PARTS can cause injury.

- Keep away from moving parts.
- Keep away from pinch points such as drive rolls.

WELDING WIRE can cause injury.

- Do not press gun trigger until instructed to do so.
- Do not point gun toward any part of the body, other people, or any metal when threading welding wire.

MOVING PARTS can cause injury.

- Keep away from moving parts such as fans.
- Keep all doors, panels, covers, and guards closed and securely in place.

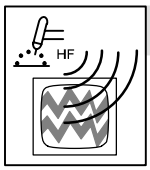

H.F. RADIATION can cause interference.

- High-frequency (H.F.) can interfere with radio navigation, safety services, computers, and communications equipment.
- Have only qualified persons familiar with electronic equipment perform this installation.
- The user is responsible for having a qualified electrician promptly correct any interference problem resulting from the installation.
- If notified by the FCC about interference, stop using the equipment at once.
- Have the installation regularly checked and maintained.
- Keep high-frequency source doors and panels tightly shut, keep spark gaps at correct setting, and use grounding and shielding to minimize the possibility of interference.

ARC WELDING can cause interference.

- Electromagnetic energy can interfere with sensitive electronic equipment such as computers and computer-driven equipment such as robots.
- Be sure all equipment in the welding area is electromagnetically compatible.
- To reduce possible interference, keep weld cables as short as possible, close together, and down low, such as on the floor.
- Locate welding operation 100 meters from any sensitive electronic equipment.
- Be sure this welding machine is installed and grounded according to this manual.
- If interference still occurs, the user must take extra measures such as moving the welding machine, using shielded cables, using line filters, or shielding the work area.

1-4. Principal Safety Standards

Safety in Welding and Cutting, ANSI Standard Z49.1, from American Welding Society, 550 N.W. LeJeune Rd, Miami FL 33126

Safety and Health Standards, OSHA 29 CFR 1910, from Superintendent of Documents, U.S. Government Printing Office, Washington, D.C. 20402.

Recommended Safe Practices for the Preparation for Welding and Cutting of Containers That Have Held Hazardous Substances, American Welding Society Standard AWS F4.1, from American Welding Society, 550 N.W. LeJeune Rd, Miami, FL 33126

National Electrical Code, NFPA Standard 70, from National Fire Protection Association, Batterymarch Park, Quincy, MA 02269.

Safe Handling of Compressed Gases in Cylinders, CGA Pamphlet P-1, from Compressed Gas Association, 1235 Jefferson Davis Highway, Suite 501, Arlington, VA 22202.

Code for Safety in Welding and Cutting, CSA Standard W117.2, from Canadian Standards Association, Standards Sales, 178 Rexdale Boulevard, Rexdale, Ontario, Canada M9W 1R3.

Safe Practices For Occupation And Educational Eye And Face Protection, ANSI Standard Z87.1, from American National Standards Institute, 1430 Broadway, New York, NY 10018.

Cutting And Welding Processes, NFPA Standard 51B, from National Fire Protection Association, Batterymarch Park, Quincy, MA 02269.

1-5. EMF Information

Considerations About Welding And The Effects Of Low Frequency Electric And Magnetic Fields

Welding current, as it flows through welding cables, will cause electromagnetic fields. There has been and still is some concern about such fields. However, after examining more than 500 studies spanning 17 years of research, a special blue ribbon committee of the National Research Council concluded that: “The body of evidence, in the committee’s judgment, has not demonstrated that exposure to power-frequency electric and magnetic fields is a human-health hazard.” However, studies are still going forth and evidence continues to be examined. Until the final conclusions of the research are reached, you may wish to minimize your exposure to electromagnetic fields when welding or cutting.

To reduce magnetic fields in the workplace, use the following procedures:

1. Keep cables close together by twisting or taping them.
2. Arrange cables to one side and away from the operator.
3. Do not coil or drape cables around your body.
4. Keep welding power source and cables as far away from operator as practical.
5. Connect work clamp to workpiece as close to the weld as possible.

About Pacemakers:

Pacemaker wearers consult your doctor first. If cleared by your doctor, then following the above procedures is recommended.

SECTION 1 – CONSIGNES DE SECURITE – LIRE AVANT UTILISATION

1-1. Signification des symboles

Signifie Mise en garde ! Soyez vigilant ! Cette procédure présente des risques de danger ! Ceux-ci sont identifiés par des symboles adjacents aux directives.

▲ **Identifie un message de sécurité particulier.**

☞ *Signifie NOTA ; n'est pas relatif à la sécurité.*

Ce groupe de symboles signifie Mise en garde ! Soyez vigilant ! Il y a des risques de danger reliés aux CHOCS ÉLECTRIQUES, aux PIÈCES EN MOUVEMENT et aux PIÈCES CHAUDES. Reportez-vous aux symboles et aux directives ci-dessous afin de connaître les mesures à prendre pour éviter tout danger.

1-2. Dangers relatifs au soudage à l'arc

▲ **Les symboles présentés ci-après sont utilisés tout au long du présent manuel pour attirer votre attention et identifier les risques de danger. Lorsque vous voyez un symbole, soyez vigilant et suivez les directives mentionnées afin d'éviter tout danger. Les consignes de sécurité présentées ci-après ne font que résumer l'information contenue dans les normes de sécurité énumérées à la section 1-4. Veuillez lire et respecter toutes ces normes de sécurité.**

▲ **L'installation, l'utilisation, l'entretien et les réparations ne doivent être confiés qu'à des personnes qualifiées.**

▲ **Au cours de l'utilisation, tenir toute personne à l'écart et plus particulièrement les enfants.**

UN CHOC ÉLECTRIQUE peut tuer.

Un simple contact avec des pièces électriques peut provoquer une électrocution ou des blessures graves. L'électrode et le circuit de soudage sont sous tension dès que l'appareil est sur ON. Le circuit d'entrée et les circuits internes de l'appareil sont également sous tension à ce moment-là. En soudage semi-automatique ou automatique, le fil, le dévidoir, le logement des galets d'entraînement et les pièces métalliques en contact avec le fil de soudage sont sous tension. Des matériels mal installés ou mal mis à la terre présentent un danger.

- Ne jamais toucher les pièces électriques sous tension.
- Porter des gants et des vêtements de protection secs ne comportant pas de trous.
- S'isoler de la pièce et de la terre au moyen de tapis ou d'autres moyens isolants suffisamment grands pour empêcher le contact physique éventuel avec la pièce ou la terre.
- Ne pas se servir de source électrique àcourant électrique dans les zones humides, dans les endroits confinés ou là où on risque de tomber.
- Se servir d'une source électrique àcourant électrique UNIQUEMENT si le procédé de soudage le demande.
- Si l'utilisation d'une source électrique àcourant électrique s'avère nécessaire, se servir de la fonction de télécommande si l'appareil en est équipé.
- Couper l'alimentation ou arrêter le moteur avant de procéder à l'installation, à la réparation ou à l'entretien de l'appareil. Déverrouiller l'alimentation selon la norme OSHA 29 CFR 1910.147 (voir normes de sécurité).
- Installer et mettre à la terre correctement cet appareil conformément à son manuel d'utilisation et aux codes nationaux, provinciaux et municipaux.
- Toujours vérifier la terre du cordon d'alimentation – Vérifier et s'assurer que le fil de terre du cordon d'alimentation est bien raccordé à la borne de terre du sectionneur ou que la fiche du cordon est raccordée à une prise correctement mise à la terre.
- En effectuant les raccordements d'entrée fixer d'abord le conducteur de mise à la terre approprié et contre-vérifier les connexions.
- Vérifier fréquemment le cordon d'alimentation pour voir s'il n'est pas endommagé ou dénudé – remplacer le cordon immédiatement s'il est endommagé – un câble dénudé peut provoquer une électrocution.
- Mettre l'appareil hors tension quand on ne l'utilise pas.
- Ne pas utiliser des câbles usés, endommagés, de grosseur insuffisante ou mal épissés.
- Ne pas enrouler les câbles autour du corps.
- Si la pièce soudée doit être mise à la terre, le faire directement avec un câble distinct.
- Ne pas toucher l'électrode quand on est en contact avec la pièce, la terre ou une électrode provenant d'une autre machine.
- N'utiliser qu'un matériel en bon état. Réparer ou remplacer sur-le-champ les pièces endommagées. Entretenir l'appareil conformément à ce manuel.
- Porter un harnais de sécurité quand on travaille en hauteur.
- Maintenir solidement en place tous les panneaux et capots.
- Fixer le câble de retour de façon à obtenir un bon contact métal-métal avec la pièce à souder ou la table de travail, le plus près possible de la soudure.
- Isoler la pince de masse quand pas mis à la pièce pour éviter le contact avec tout objet métallique.

Il y a DU COURANT CONTINU IMPORTANT dans les convertisseurs après la suppression de l'alimentation électrique.

- Arrêter les convertisseurs, débrancher le courant électrique, et décharger les condensateurs d'alimentation selon les instructions indiquées dans la partie entretien avant de toucher les pièces.

LES FUMÉES ET LES GAZ peuvent être dangereux.

Le soudage génère des fumées et des gaz. Leur inhalation peut être dangereux pour votre santé.

- Eloigner votre tête des fumées. Ne pas respirer les fumées.
- A l'intérieur, ventiler la zone et/ou utiliser un échappement au niveau de l'arc pour l'évacuation des fumées et des gaz de soudage.
- Si la ventilation est insuffisante, utiliser un respirateur à alimentation d'air homologué.
- Lire les spécifications de sécurité des matériaux (MSDSs) et les instructions du fabricant concernant les métaux, les consommables, les revêtements, les nettoyants et les dégraisseurs.
- Travailler dans un espace fermé seulement s'il est bien ventilé ou en portant un respirateur à alimentation d'air. Demander toujours à un surveillant dûment formé de se tenir à proximité. Des fumées et des gaz de soudage peuvent déplacer l'air et abaisser le niveau d'oxygène provoquant des blessures ou des accidents mortels. S'assurer que l'air de respiration ne présente aucun danger.
- Ne pas souder dans des endroits situés à proximité d'opérations de dégraissage, de nettoyage ou de pulvérisation. La chaleur et les rayons de l'arc peuvent réagir en présence de vapeurs et former des gaz hautement toxiques et irritants.
- Ne pas souder des métaux munis d'un revêtement, tels que l'acier galvanisé, plaqué en plomb ou au cadmium à moins que le revêtement n'ait été enlevé dans la zone de soudure, que l'endroit soit bien ventilé, et si nécessaire, en portant un respirateur à alimentation d'air. Les revêtements et tous les métaux renfermant ces éléments peuvent dégager des fumées toxiques en cas de soudage.

LES RAYONS DE L'ARC peuvent provoquer des brûlures dans les yeux et sur la peau.

Le rayonnement de l'arc du procédé de soudage génère des rayons visibles et invisibles intenses (ultraviolets et infrarouges) susceptibles de provoquer des brûlures dans les yeux et sur la peau. Des étincelles sont projetées pendant le soudage.

- Porter un casque de soudage muni d'un écran de filtre approprié pour protéger votre visage et vos yeux pendant le soudage ou pour regarder (voir ANSI Z49.1 et Z87.1 énuméré dans les normes de sécurité).
- Porter des protections approuvés pour les oreilles si le niveau sondre est trop élevé.
- Utiliser des écrans ou des barrières pour protéger des tiers de l'éclair et de l'éblouissement; demander aux autres personnes de ne pas regarder l'arc.
- Porter des vêtements de protection constitué dans une matière durable, résistant au feu (cuir ou laine) et une protection des pieds.

LE SOUDAGE peut provoquer un incendie ou une explosion.

Le soudage effectué sur des conteneurs fermés tels que des réservoirs, tambours ou des conduites peut provoquer leur éclatement. Des étincelles peuvent être projetées de l'arc de soudure. La projection d'étincelles, des pièces chaudes et des équipements chauds peut provoquer des incendies et des brûlures. Le contact accidentel de l'électrode avec des objets métalliques peut provoquer des étincelles, une explosion, un surchauffement ou un incendie. Avant de commencer le soudage, vérifier et s'assurer que l'endroit ne présente pas de danger.

- Se protéger et d'autres personnes de la projection d'étincelles et de métal chaud.
- Ne pas souder dans un endroit là où des étincelles peuvent tomber sur des substances inflammables.
- Déplacer toutes les substances inflammables à une distance de 10,7 m de l'arc de soudage. En cas d'impossibilité les recouvrir soigneusement avec des protections homologués.
- Des étincelles et des matériaux chauds du soudage peuvent facilement passer dans d'autres zones en traversant de petites fissures et des ouvertures.
- Surveiller tout déclenchement d'incendie et tenir un extincteur à proximité.
- Le soudage effectué sur un plafond, plancher, paroi ou séparation peut déclencher un incendie de l'autre côté.
- Ne pas effectuer le soudage sur des conteneurs fermés tels que des réservoirs, tambours, ou conduites, à moins qu'ils n'aient été préparés correctement conformément à AWS F4.1 (voir les normes de sécurité).
- Brancher le câble sur la pièce le plus près possible de la zone de soudage pour éviter le transport du courant sur une longue distance par des chemins inconnus éventuels en provoquant des risques d'électrocution et d'incendie.
- Ne pas utiliser le poste de soudage pour dégeler des conduites gelées.
- En cas de non utilisation, enlever la baguette d'électrode du porte-électrode ou couper le fil à la pointe de contact.
- Porter des vêtements de protection dépourvus d'huile tels que des gants en cuir, une chemise en matériau lourd, des pantalons sans revers, des chaussures hautes et un couvre chef.
- Avant de souder, retirer toute substance combustible de vos poches telles qu'un allumeur au butane ou des allumettes.

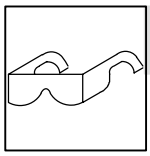

DES PARTICULES VOLANTES peuvent blesser les yeux.

- Le soudage, l'écaillement, le passage de la pièce à la brosse en fil de fer, et le meulage génèrent des étincelles et des particules métalliques volantes. Pendant la période de refroidissement des soudures, elles risquent de projeter du laitier.
- Porter des lunettes de sécurité avec écrans latéraux ou un écran facial.

LES ACCUMULATIONS DE GAZ risquent de provoquer des blessures ou même la mort.

- Fermer l'alimentation du gaz protecteur en cas de non utilisation.
- Veiller toujours à bien aérer les espaces confinés ou se servir d'un respirateur d'adduction d'air homologué.

DES PIÈCES CHAUDES peuvent provoquer des brûlures graves.

- Ne pas toucher des parties chaudes à mains nues
- Prévoir une période de refroidissement avant d'utiliser le pistolet ou la torche.

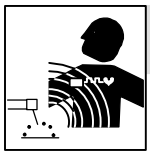

LES CHAMPS MAGNÉTIQUES peuvent affecter les stimulateurs cardiaques.

- Porteurs de stimulateur cardiaque, restez à distance.
- Les porteurs d'un stimulateur cardiaque doivent d'abord consulter leur médecin avant de s'approcher des opérations de soudage à l'arc, de gougeage ou de soudage par points.

LE BRUIT peut affecter l'ouïe.

Le bruit des processus et des équipements peut affecter l'ouïe.

- Porter des protections approuvés pour les oreilles si le niveau sondre est trop élevé.

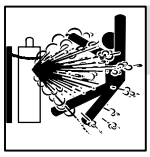

Si des BOUTEILLES sont endommagées, elles pourront exploser.

Des bouteilles de gaz protecteur contiennent du gaz sous haute pression. Si une bouteille est endommagée, elle peut exploser. Du fait que les bouteilles de gaz font normalement partie du procédé de soudage, les manipuler avec précaution.

- Protéger les bouteilles de gaz comprimé d'une chaleur excessive, des chocs mécaniques, du laitier, des flammes ouvertes, des étincelles et des arcs.
- Placer les bouteilles debout en les fixant dans un support stationnaire ou dans un porte-bouteilles pour les empêcher de tomber ou de se renverser.
- Tenir les bouteilles éloignées des circuits de soudage ou autres circuits électriques.
- Ne jamais placer une torche de soudage sur une bouteille à gaz.
- Une électrode de soudage ne doit jamais entrer en contact avec une bouteille.
- Ne jamais souder une bouteille pressurisée – risque d'explosion.
- Utiliser seulement des bouteilles de gaz protecteur, régulateurs, tuyaux et raccords convenables pour cette application spécifique; les maintenir ainsi que les éléments associés en bon état.
- Ne pas tenir la tête en face de la sortie en ouvrant la soupape de la bouteille.
- Maintenir le chapeau de protection sur la soupape, sauf en cas d'utilisation ou de branchement de la bouteille.
- Lire et suivre les instructions concernant les bouteilles de gaz comprimé, les équipements associés et les publications P-1 CGA énumérées dans les normes de sécurité.

1-3. Dangers supplémentaires en relation avec l'installation, le fonctionnement et la maintenance

Risque D'INCENDIE OU D'EXPLOSION.

- Ne pas placer l'appareil sur, au-dessus ou à proximité de surfaces infllammables.
- Ne pas installer l'appareil à proximité de produits inflammables
- Ne pas surcharger l'installation électrique – s"assurer que l'alimentation est correctement dimensionné et protégé avant de mettre l'appareil en service.

LA CHUTE DE L'APPAREIL peut blesser.

- Utiliser l'anneau de levage uniquement pour soulever l'appareil, NON PAS les chariot, les bouteilles de gaz ou tout autre accessoire.
- Utiliser un engin d'une capacité appropriée pour soulever l'appareil.
- En utilisant des fourches de levage pour déplacer l'unité, s'assurer que les fourches sont suffisamment longues pour dépasser du côté opposé de l'appareil.

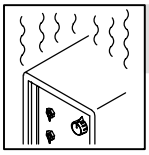

L'EMPLOI EXCESSIF peut SURCHAUFFER L'ÉQUIPEMENT.

- Prévoir une période de refroidissement, respecter le cycle opératoire nominal.
- Réduire le courant ou le cycle opératoire avant de recommancer le soudage.
- Ne pas obstruer les passages d'air du poste.

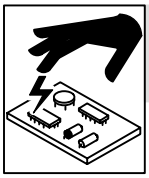

LES CHARGES ÉLECTROSTATIQUES peuvent endommager les circuits imprimés.

- Établir la connexion avec la barrette de terre avant de manipuler des cartes ou des pièces.
- Utiliser des pochettes et des boîtes antistatiques pour stocker, déplacer ou expédier des cartes de circuits imprimes.

DES ORGANES MOBILES peuvent provoquer des blessures.

- Ne pas s'approcher des organes mobiles.
- Ne pas s'approcher des points de coincement tels que des rouleaux de commande.

LES FILS DE SOUDAGE peuvent provoquer des blessures.

- Ne pas appuyer sur la gachette avant d'en avoir reçu l'instruction.
- Ne pas diriger le pistolet vers soi, d'autres personnes ou toute pièce mécanique en engageant le fil de soudage.

DES ORGANES MOBILES peuvent provoquer des blessures.

- Rester à l'écart des organes mobiles comme le ventilateur.
- Maintenir fermés et fixement en place les portes, panneaux, recouvrements et dispositifs de protection.

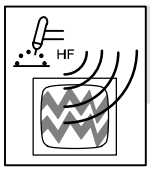

LE RAYONNEMENT HAUTE FRÉQUENCE (H.F.) risque de provoquer des interférences.

- Le rayonnement haute frequence peut provoquer des interférences avec les équipements de radio–navigation et de communication, les services de sécurité et les ordinateurs.
- Demander seulement à des personnes qualifiées familiarisées avec des équipements électroniques de faire fonctionner l'installation.
- L'utilisateur est tenu de faire corriger rapidement par un électricien qualifié les interférences résultant de l'installation.
- Si le FCC signale des interférences, arrêter immédiatement l'appareil.
- Effectuer régulièrement le contrôle et l'entretien de l'installation.
- Maintenir soigneusement fermés les portes et les panneaux des sources de haute fréquence, maintenir les éclateurs à une distance correcte et utiliser une terre et et un blindage pour réduire les interférences éventuelles.

LE SOUDAGE À L'ARC risque de provoquer des interférences.

- L'énergie électromagnétique risque de provoquer des interférences pour l'équipement électronique sensible tel que les ordinateurs et l'équipement commandé par ordinateur tel que les robots.
- Veiller à ce que tout l'équipement de la zone de soudage soit compatible électromagnétiquement.
- Pour réduire la possibilité d'interférence, maintenir les câbles de soudage aussi courts que possible, les grouper, et les poser aussi bas que possible (ex. par terre).
- Veiller à souder à une distance de 100 mètres de tout équipement électronique sensible.
- Veiller à ce que ce poste de soudage soit posé et mis à la terre conformément à ce mode d'emploi.
- En cas d'interférences après avoir pris les mesures précédentes, il incombe à l'utilisateur de prendre des mesures supplémentaires telles que le déplacement du poste, l'utilisation de câbles blindés, l'utilisation de filtres de ligne ou la pose de protecteurs dans la zone de travail.

LES CHAMPS MAGNÉTIQUES peuvent affecter les stimulateurs cardiaques.

- Porteurs de stimulateur cardiaque, restez à distance.
- Les porteurs d'un stimulateur cardiaque doivent d'abord consulter leur médecin avant de s'approcher des opérations de soudage à l'arc, de gougeage ou de soudage par points.

1-4. Principales normes de sécurité

Safety in Welding and Cutting, norme ANSI Z49.1, de l'American Welding Society, 550 N.W. Lejeune Rd, Miami FL 33126

Safety and Health Sandards, OSHA 29 CFR 1910, du Superintendent of Documents, U.S. Government Printing Office, Washington, D.C. 20402.

Recommended Safe Practice for the Preparation for Welding and Cutting of Containers That Have Held Hazardous Substances, norme AWS F4.1, de l'American Welding Society, 550 N.W. Lejeune Rd, Miami FL 33126

National Electrical Code, NFPA Standard 70, de la National Fire Protection Association, Batterymarch Park, Quincy, MA 02269.

Safe Handling of Compressed Gases in Cylinders, CGA Pamphlet P-1, de la Compressed Gas Association, 1235 Jefferson Davis Highway, Suite 501, Arlington, VA 22202.

Règles de sécurité en soudage, coupage et procédés connexes, norme CSA W117.2, de l'Association canadienne de normalisation, vente de normes, 178 Rexdale Boulevard, Rexdale (Ontario) Canada M9W 1R3.

Safe Practices For Occupation And Educational Eye And Face Protection, norme ANSI Z87.1, de l'American National Standards Institute, 1430 Broadway, New York, NY 10018.

Cutting and Welding Processes, norme NFPA 51B, de la National Fire Protection Association, Batterymarch Park, Quincy, MA 02269.

1-5. Information sur les champs électromagnétiques

Données sur le soudage électrique et sur les effets, pour l'organisme, des champs magnétiques basse fréquence

Le courant de soudage, pendant son passage dans les câbles de soudage, causera des champs électromagnétiques. Il y a eu et il y a encore un certain souci à propos de tels champs. Cependant, après avoir examiné plus de 500 études qui ont été faites pendant une période de recherche de 17 ans, un comité spécial ruban bleu du National Research Council a conclu: "L'accumulation de preuves, suivant le jugement du comité, n'a pas démontré que l'exposition aux champs magnétiques et champs électriques à haute fréquence représente un risque à la santé humaine". Toutefois, des études sont toujours en cours et les preuves continuent à être examinées. En attendant que les conclusions finales de la recherche soient établies, il vous serait souhaitable de réduire votre exposition aux champs électromagnétiques pendant le soudage ou le coupage.

Afin de réduire les champs électromagnétiques dans l'environnement de travail, respecter les consignes suivantes :

1 Garder les câbles ensembles en les torsadant ou en les attachant avec du ruban adhésif.
2 Mettre tous les câbles du côté opposé de l'opérateur.
3 Ne pas courber pas et ne pas entourer pas les câbles autour de votre corps.
4 Garder le poste de soudage et les câbles le plus loin possible de vous.
5 Relier la pince de masse le plus près possible de la zone de soudure.

Consignes relatives aux stimulateurs cardiaques :

Les personnes qui portent un stimulateur cardiaque doivent avant tout consulter leur docteur. Si vous êtes déclaré apte par votre docteur, il est alors recommandé de respecter les consignes ci–dessus.

SECTION 2 – INSTALLATION

NOTE ☞

Unless otherwise noted, the Invision 456P is shown throughout this manual. When information does not apply to both models, the applicable model is specified.

2-1. Specifications

Input Power	Rated Welding Output	Amperage Range (Phoenix 456 CC/CV Only)	Voltage Range	Maximum Open-Circuit Voltage DC	Amperes Input At Rated Load Output 60 Hz, Three-Phase			KVA		KW	
					230 V	460 V	575 V	230/460	575	230/460	575
Three Phase	450 A @ 38 Volts DC, 100% Duty Cycle; 565 A @ 43 Volts DC, 60% Duty Cycle	5 – 600	10 – 38	95	50.8 (0.14*)	27.8 (0.09*)	24.4 (0.12*)	21.2 (0.06*)	24.3 (0.12*)	19.2 (0.04*)	19.0 (0.07*)
*While idling											

2-2. Duty Cycle and Overheating

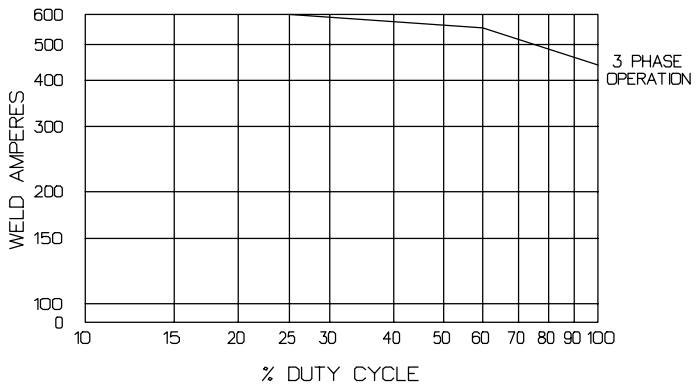

Duty Cycle is percentage of 10 minutes that unit can weld at rated load without overheating.

If unit overheats, thermostat(s) opens, output stops, and cooling fan runs. Wait fifteen minutes for unit to cool. Reduce amperage or duty cycle before welding.

▲ **Exceeding duty cycle can damage unit and void warranty.**

100% Duty Cycle At 450 Amperes

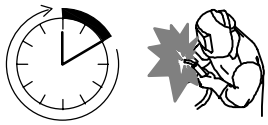

Continuous Welding

60% Duty Cycle At 565 Amperes

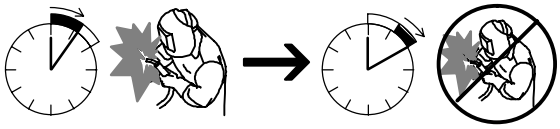

6 Minutes Welding

4 Minutes Resting

Overheating

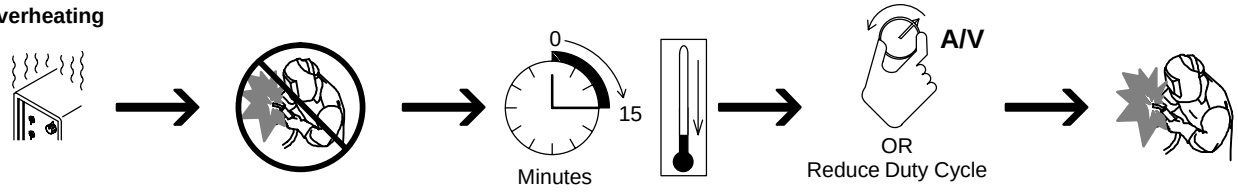

duty1 4/95 – SA-181 560

2-3. Volt-Ampere Curves

Volt-ampere curves show minimum and maximum voltage and amperage output capabilities of unit. Curves of other settings fall between curves shown.

Invision 456P and Phoenix 456 (CV Only)

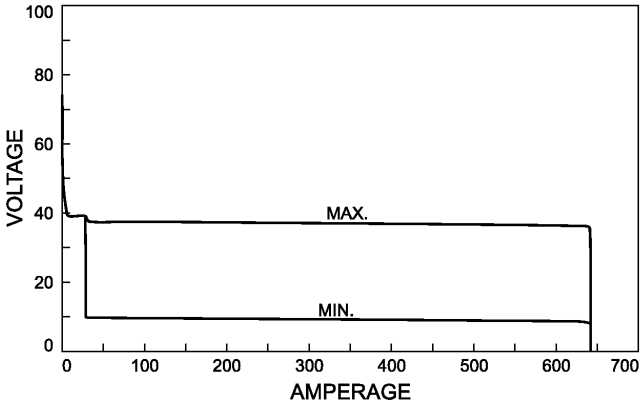

Phoenix 456 (CC Only)

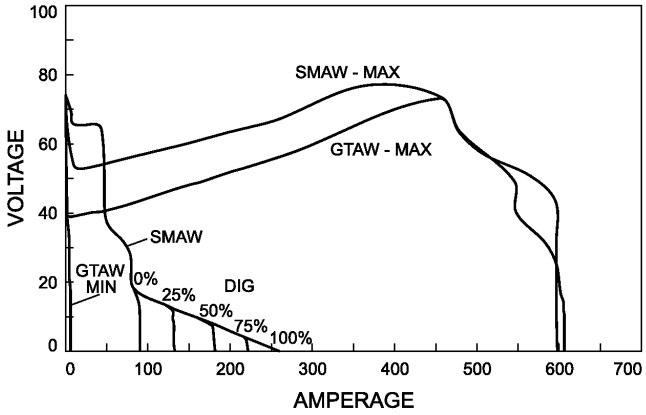

va_curve1 4/95 – SA-181 562 / SA-181 561

2-4. Dimensions And Weight

Hole Layout Dimensions	
A	14-21/64 in (363.9 mm)
B	20-3/4 in (527.1 mm)
C	23-27/64 in (594.9 mm)
D	24-31/32 in (634.2 mm)
E	12-3/8 in (314.3 mm)
F	9/32 in (7.1 mm) Dia.
Weight	
118 lb (53.5 kg)	

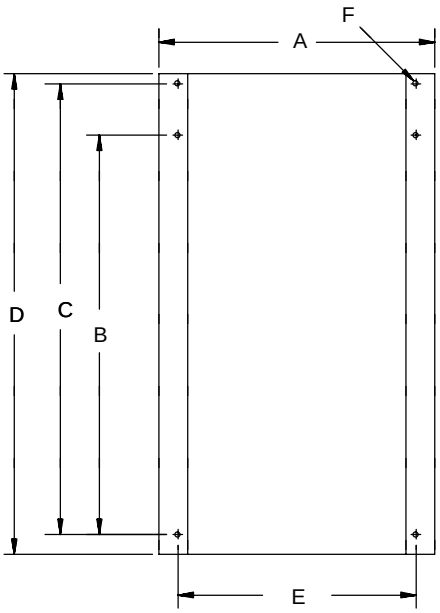

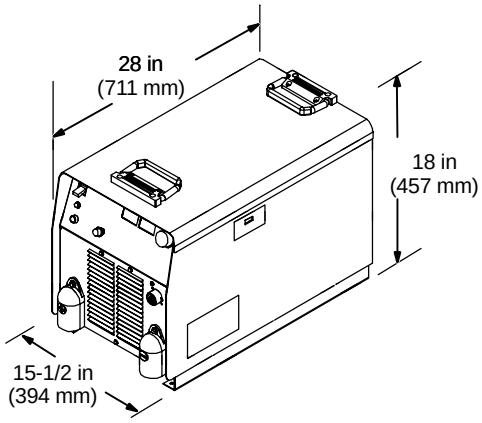

2-5. Selecting a Location

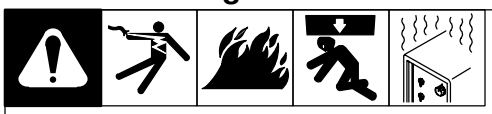

Movement

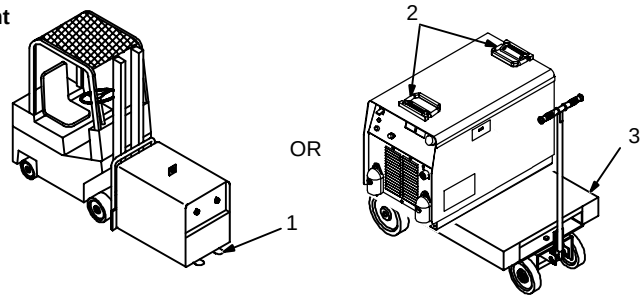

Tipping

▲ **Do not move or operate unit where it could tip.**

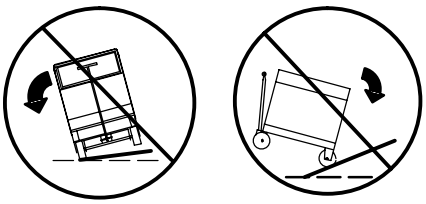

Location

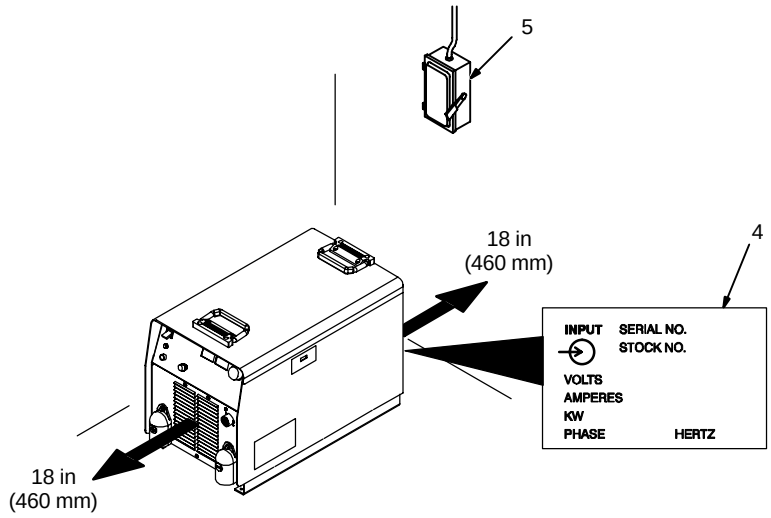

1 Lifting Forks

Use lifting forks to move unit.

Extend forks beyond opposite side of unit.

2 Lifting Handles

Use handles to lift unit.

3 Hand Cart

Use cart or similar device to move unit.

4 Rating Label

Use rating label to determine input power needs.

5 Line Disconnect Device

Locate unit near correct input power supply.

▲ **Special installation may be required where gasoline or volatile liquids are present – see NEC Article 511 or CEC Section 20.**

loc_2 3/96 - Ref. ST-151 556 / ST-800 611 / ST-801 718

2-6. Weld Output Terminals and Selecting Cable Sizes

Weld Output Terminals	Welding Amperes	Total Cable (Copper) Length In Weld Circuit Not Exceeding							
		100 ft (30 m) Or Less		150 ft (45 m)	200 ft (60 m)	250 ft (70 m)	300 ft (90 m)	350 ft (105 m)	400 ft (120 m)
		10 – 60% Duty Cycle	60 – 100% Duty Cycle	10 – 100% Duty Cycle					
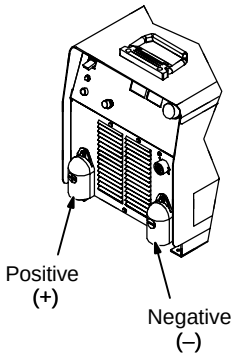	100	4	4	4	3	2	1	1/0	1/0
	150	3	3	2	1	1/0	2/0	3/0	3/0
	200	3	2	1	1/0	2/0	3/0	4/0	4/0
	250	2	1	1/0	2/0	3/0	4/0	2-2/0	2-2/0
	300	1	1/0	2/0	3/0	4/0	2-2/0	2-3/0	2-3/0
	350	1/0	2/0	3/0	4/0	2-2/0	2-3/0	2-3/0	2-4/0
	400	1/0	2/0	3/0	4/0	2-2/0	2-3/0	2-4/0	2-4/0
	500	2/0	3/0	4/0	2-2/0	2-3/0	2-4/0	3-3/0	3-3/0
	600	3/0	4/0	2-2/0	2-3/0	2-4/0	3-3/0	3-4/0	3-4/0

Weld cable size (AWG) is based on either a 4 volts or less drop or a current density of at least 300 circular mils per ampere. S-0007-D

2-7. Remote 14 Receptacle Information

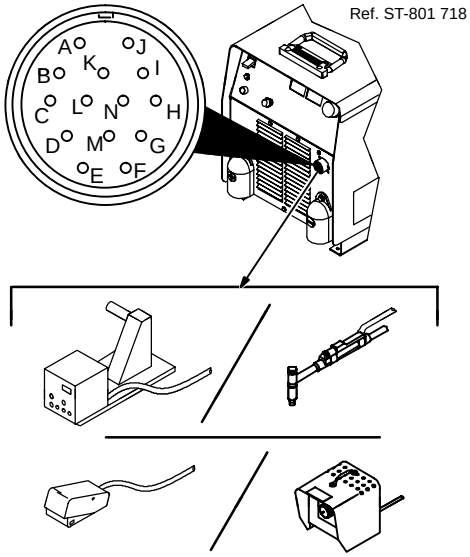

REMOTE 14	Socket*	Socket Information
24 VOLTS AC OUTPUT (CONTACTOR)	A	24 volts ac. Protected by circuit breaker CB2.
	B	Contact closure to A completes 24 volts ac contactor control circuit.
115 VOLTS AC OUTPUT (CONTACTOR)	I	115 volts ac. Protected by circuit breaker CB1.
	J	Contact closure to I completes 115 volts ac contactor control circuit.
REMOTE CONTROL	C	Output to remote control; +10 volts dc in MIG mode. For Phoenix 456 only: 0 to +10 volts dc in other modes.
	D	Remote control circuit common.
	E	0 to +10 volts dc input command signal from remote control.
	M	Mode select.
	N	Remote inductance control.
A/V AMPERAGE VOLTAGE	F	Current feedback; +1 volt dc per 100 amperes.
	H	Voltage feedback; +1 volt dc per 10 arc volts.
GND	G	Circuit common for 24 and 115 volts ac circuits.
	K	Chassis common.

*The remaining sockets are not used.

2-8. 115 Volts AC Duplex Receptacle And Circuit Breakers

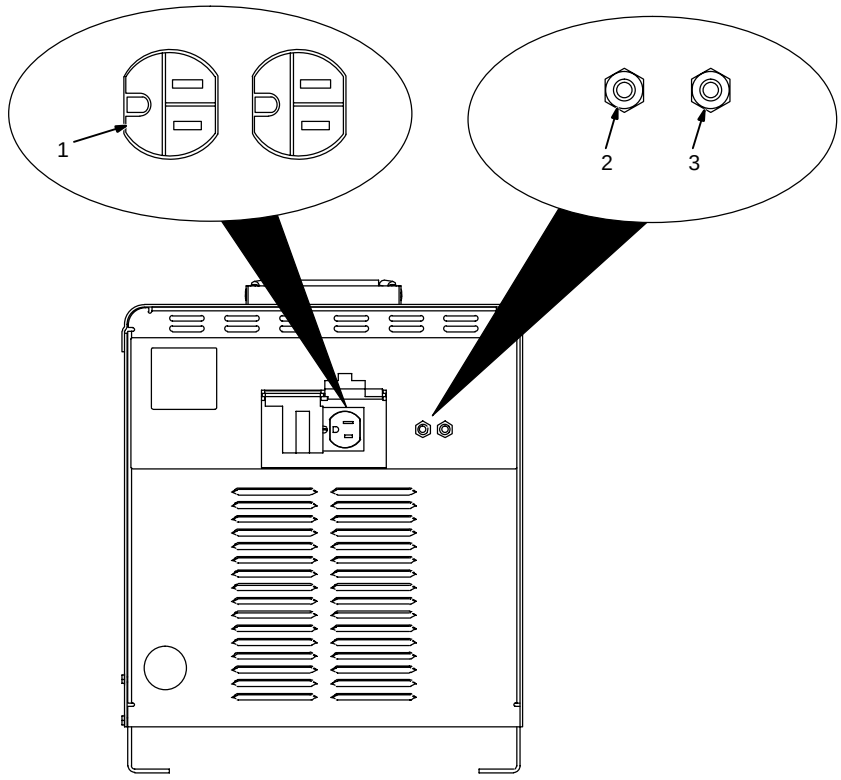

1 115 V 10 A AC Receptacle

Power is shared between duplex receptacle and Remote 14 receptacle (see Section 2-7).

2 Circuit Breaker CB1

3 Circuit Breaker CB2

CB1 protects duplex receptacle and 115 volts ac portion of Remote 14 receptacle from overload.

CB2 protects 24 volts ac portion of Remote 14 receptacle from overload.

Press button to reset breaker.

ST-801 524-B

2-9. Electrical Service Guide

	Three-Phase		
Input Voltage	230	460	575
Input Amperes At Rated Output	50.8	27.8	24.4
Max Recommended Standard Fuse Or Circuit Breaker Rating In Amperes	80	40	35
Min Input Conductor Size In AWG/Kcmil	6	10	10
Max Recommended Input Conductor Length In Feet (Meters)	138 (42)	233 (71)	371 (113)
Min Grounding Conductor Size In AWG/Kcmil	8	10	10
Reference: 1993 National Electrical Code (NEC).			S-0092J

2-10. Selecting Input Voltage (230/460 Volt Models Only)

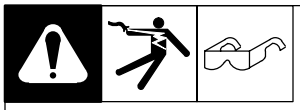

☞ *Be sure to reinstall all four screws securing relinking board in place.*

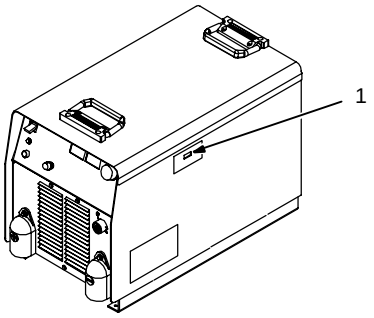

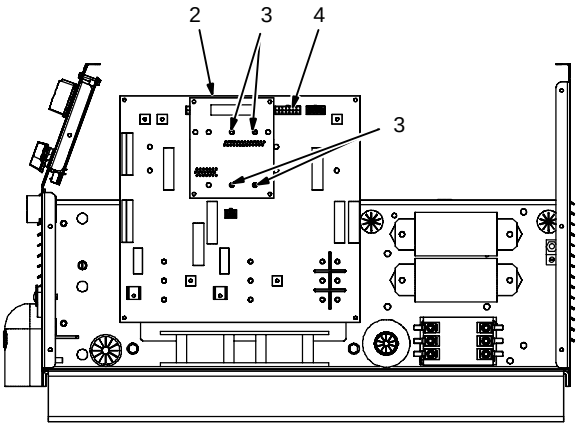

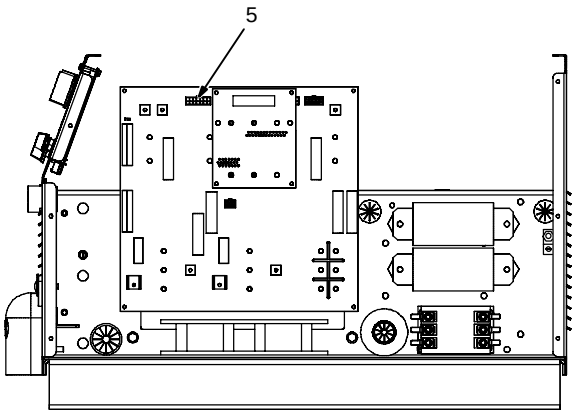

Tools Needed:

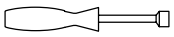

5/16 in

▲ **Turn Off welding power source, disconnect input power, and check voltage on input capacitors according to Section 4-3 before proceeding.**

Check input voltage available at site.

1 Voltage Selection View Window

Check voltage selected in unit. Changing selection is only necessary if selected value does not match available input voltage.

2 Relinking Board PC6

3 Mounting Screws

4 Receptacle RC8 (Connection For 230 VAC Input Power)

5 Receptacle RC7 (Connection For 460 VAC Input Power)

Move relinking board as needed and connect plug PLG4 (in unit) to RC8 or RC7 according to input power voltage.

ST-801 718 / ST-801 536-B

2-11. Connecting Input Power

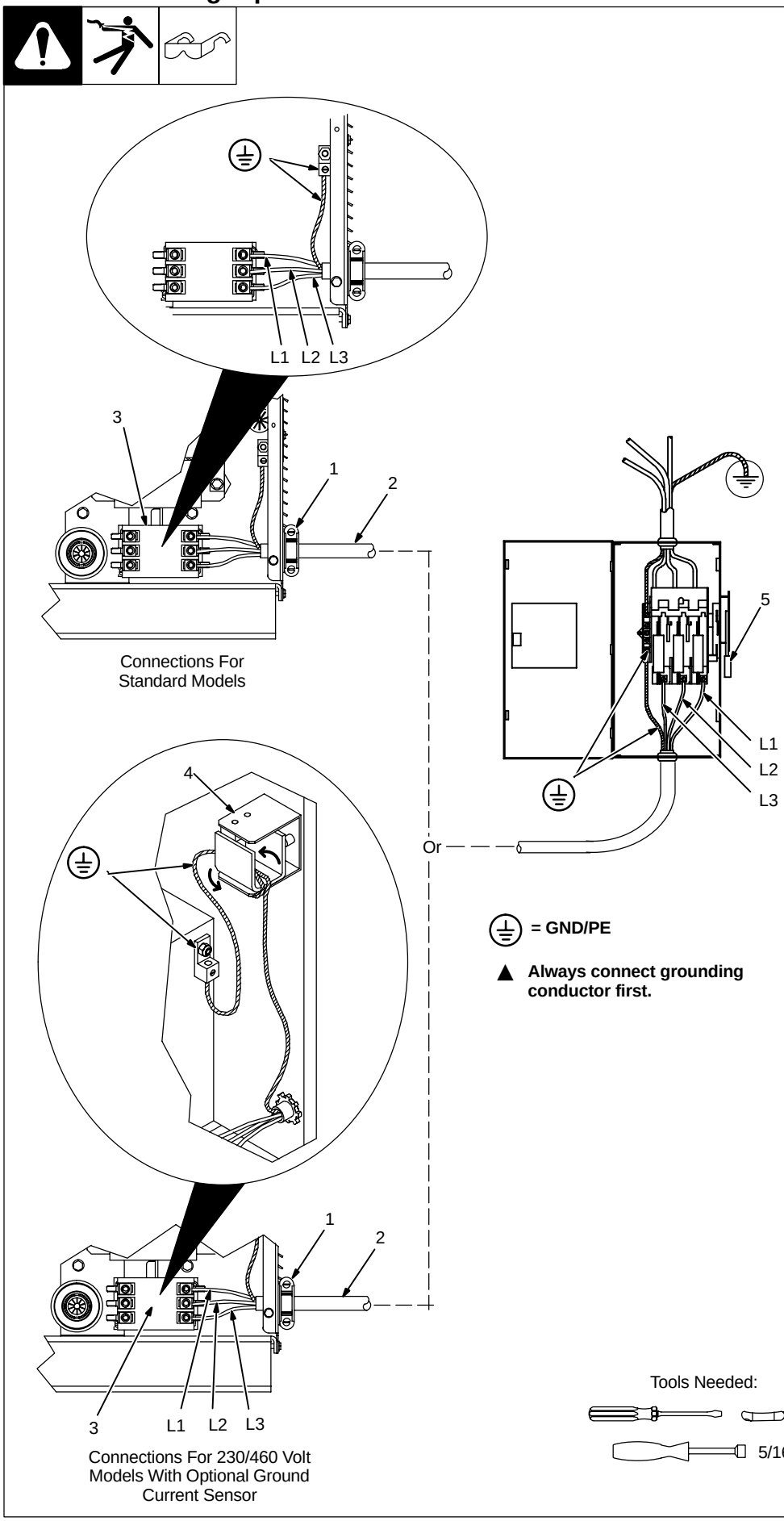

▲ **Turn Off welding power source, and check voltage on input capacitors according to Sections 4-3 or 4-4, as applicable, before proceeding.**

1 Strain Relief Connector Clamp

Obtain and install proper connector.

2 Input And Grounding Conductors

3 Contactor W1

Select size and length using Section 2-9. Connect as shown in illustration.

For 230/460 Volt Models With Optional Ground Current Sensor:

4 Ground Current Sensor

When cutting input and ground conductors to length, ground conductor must be 26 inches (660 mm) long to wrap around ground current sensor. Note that ground conductor must be insulated between strain relief and ground terminal.

Insert input and grounding conductors through strain relief. Route grounding conductor through reed switch from right side of unit, under switch, and through reed switch again (two turns total) before connecting to ground terminal.

For All Models:

5 Line Disconnect Device

See Section 2-9.

Reinstall right side panel.

▲ **Always connect grounding conductor first.**

Tools Needed:

5/16 in

801 535-B / 801 822-A

SECTION 3 – OPERATION

3-1. Front Panel Controls For Invision 456P

1 Power Switch

☞ *The fan motor is thermostatically controlled and only runs when cooling is needed.*

2 Voltmeter (see Section 3-3)

3 Ammeter (see Section 3-3)

4 Voltage Adjustment Control

5 Inductance Control

Inductance determines the “wetness” of the weld puddle. When set higher, “wetness” (puddle fluidity) increases.

6 Remote On/Off Receptacle (An Option On 230/460 Volt Models)

Sockets 1 and 2 are connected in parallel with the Power switch. For remote On/Off control, connect a suitable plug from a remote switch to the receptacle and place front panel Power switch in Off position. Unit can then be turned On and Off through the use of the remote switch.

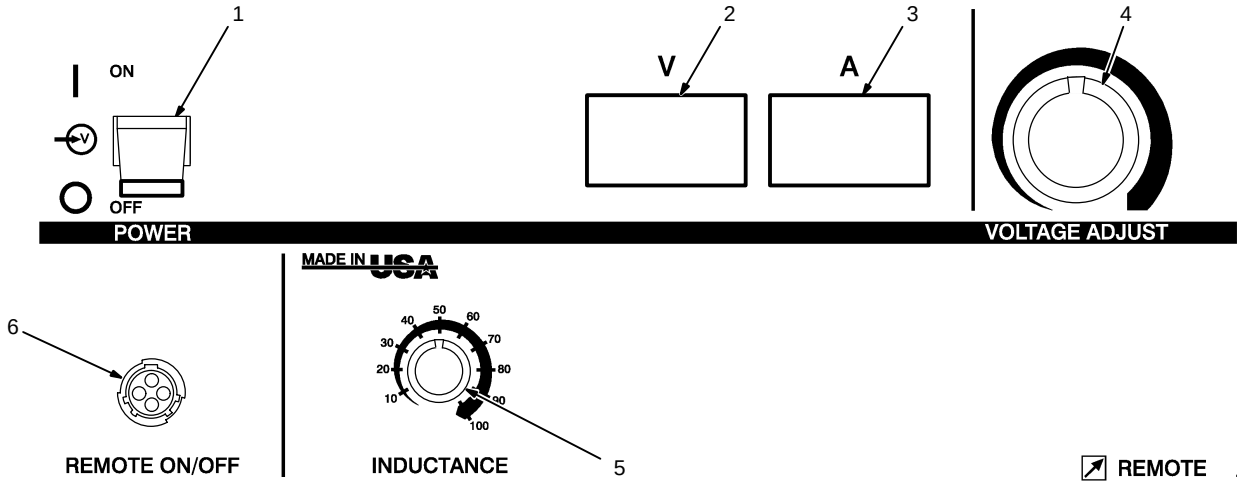

ST-180 311-C

3-2. Mode and Voltage Control For Invision 456P

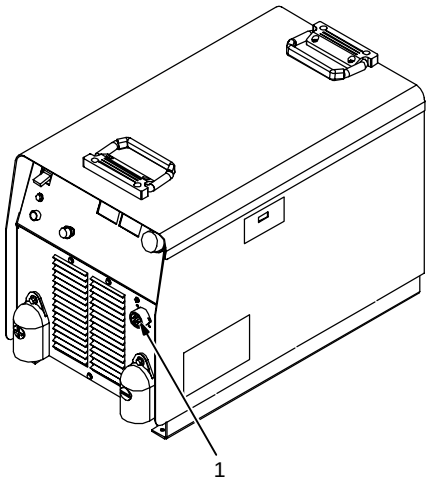

1 Remote 14 Receptacle

Mode Control

The unit defaults to standard MIG mode. When a suitable external pulsing control is attached to the Remote 14 receptacle, the remote pendant controls whether the unit is in standard MIG or pulsed MIG mode. When the pulsing control is disconnected, the unit returns to standard MIG operation.

Voltage Control

The unit defaults to Panel control of output voltage. When a suitable remote voltage control or pulsing control is attached to the Remote 14 receptacle, the remote device assumes control of output voltage.

To return to Panel control of voltage, disconnect or disable any remote devices that send an input to pin E.

ST-801 192

3-3. Meter Functions For Invision 456P

NOTE ☞	*The meters display the actual weld output values for approximately three seconds after the arc is broken.*

Mode	Meter Reading At Idle		Meter Reading While Welding	
	V	A	V	A
MIG	24.5		24.5	250
	Preset Volts	Blank	Actual Volts	Actual Amps
	V	A	V	A
Pulsed MIG	PPP	PPP	24.5	250
	Pulse Display	Pulse Display	Actual Volts	Actual Amps

3-4. Front Panel Controls For Phoenix 456 CC/CV

1 Power Switch

☞ *The fan motor is thermostatically controlled and only runs when cooling is needed.*

2 Voltmeter (see Section 3-5)

3 Ammeter (see Section 3-5)

4 V/A (Voltage/Amperage) Adjust Control

5 Voltage/Amperage Control Switch

For front panel control, place switch in Panel position and use the V/A Adjust control.

For remote control, make connections to Remote 14 receptacle, and place switch in Remote position. In most modes, remote control is a percent of the V/A Adjust control setting. Value selected on V/A Adjust is maximum available on remote. In the MIG mode, remote control provides full range of unit output regardless of V/A Adjust control setting.

6 Mode Switch

The Mode switch setting determines both the process and output On/Off control (see Section 3-6). Source of control (panel or remote) for the amount of output is selected on the V/A Control switch.

For Air Carbon Arc (CAC-A) cutting and gouging, place switch in the Stick position. For best results, place Inductance/Dig control in the maximum position.

7 Inductance/Dig Control

Control adjusts Dig when the Stick or CC mode is selected on the Mode switch. When set towards minimum, short-circuit amperage at low arc voltage is the same as normal welding amperage.

When set towards maximum, short-circuit amperage is increased at low arc voltage to assist with arc starts as well as reduce sticking while welding (see volt-ampere curves in Section 2-3).

Select setting best suited for application.

Control adjusts inductance when MIG position is selected on the Mode switch. Inductance determines the “wetness” of the weld puddle. When set towards maximum, “wetness” (puddle fluidity) increases.

When Pulsed MIG, or one of the TIG modes is selected, this control is not functional.

8 Remote On/Off Receptacle (An Option On 230/460 Volt Models)

Sockets 1 and 2 are connected in parallel with the Power switch. For remote On/Off control, connect a suitable plug from a remote switch to the receptacle and place front panel Power switch in Off position. Unit can then be turned On and Off through the use of the remote switch.

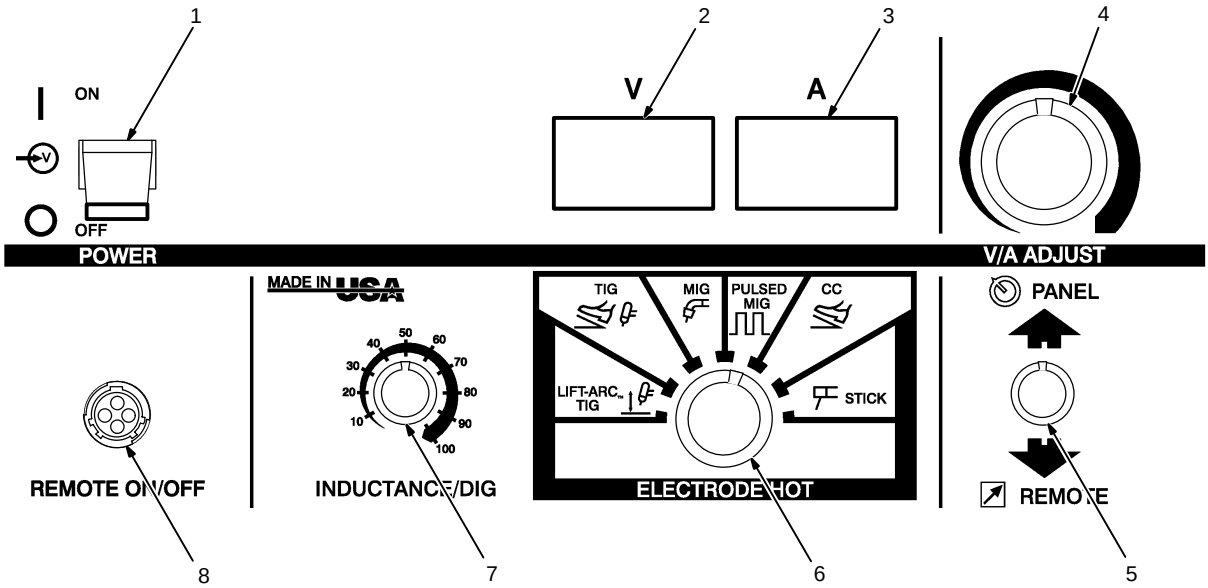

ST-180 310-A

3-5. Meter Functions For Phoenix 456 CC/CV

NOTE ☞ *The meters display the actual weld output values for approximately three seconds after the arc is broken.*

Mode	Meter Reading At Idle		Meter Reading While Welding	
Lift-Arc TIG	V 7.0 Actual Volts	A 85 Preset Amps	V 10.3 Actual Volts	A 85 Actual Amps
TIG	V Blank	A 85 Preset Amps	V 10.3 Actual Volts	A 85 Actual Amps
MIG	V 24.5 Preset Volts	A Blank	V 24.5 Actual Volts	A 250 Actual Amps
Pulsed MIG	V PPP Pulse Display	A PPP Pulse Display	V 24.5 Actual Volts	A 250 Actual Amps
CC	V Blank	A 85 Preset Amps	V 24.5 Actual Volts	A 85 Actual Amps
Stick	V 80.0 Actual Volts (OCV)	A 85 Preset Amps	V 24.5 Actual Volts	A 85 Actual Amps

3-6. Mode Switch Settings For Phoenix 456 CC/CV

NOTE ☞ *The Stick and CC modes provide the* Adaptive Hot Start™ *feature, which automatically increases the output amperage at the start of a weld should the start require it. This eliminates electrode sticking at arc start.*

Mode Switch Setting	Process	Output On/Off Control
Lift-Arc TIG	GTAW – See Section 3-7	Electrode Hot
TIG	GTAW With HF Unit, Pulsing Device, Or Remote Control	At Remote 14
MIG	GMAW	At Remote 14
Pulsed MIG	GMAW-P (Requires an external pulsing device.)	At Remote 14
CC	Stick (SMAW) With Remote On/Off	At Remote 14
Stick	SMAW	Electrode Hot

3-7. Lift-Arc TIG Procedure For Phoenix 456 CC/CV

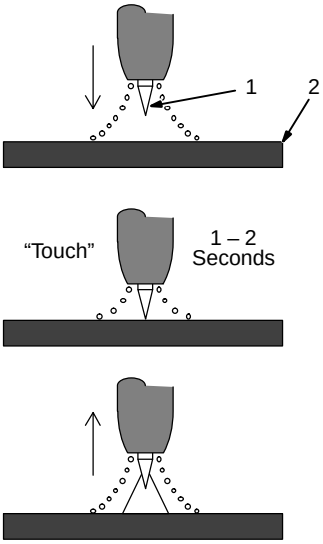

Do NOT Strike Like A Match!

With Mode switch in the Lift-Arc TIG position, start an arc as follows:

1 TIG Electrode

2 Workpiece

Touch tungsten electrode to workpiece at weld start point, **hold electrode to workpiece for 1-2 seconds**, and slowly lift electrode. An arc will form when electrode is lifted.

Normal open-circuit voltage is not present before tungsten electrode touches workpiece; only a low sensing voltage is present between electrode and workpiece. The solid-state output contactor does not energize until after electrode is touching workpiece. This allows electrode to touch workpiece without overheating, sticking, or getting contaminated.

Ref. S-156 279

SECTION 4 – MAINTENANCE AND TROUBLESHOOTING

4-1. Routine Maintenance

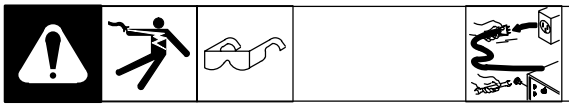

▲ **Disconnect power before maintaining.**

☞ *Maintain more often during severe conditions.*

3 Months

Replace damaged or unreadable label.

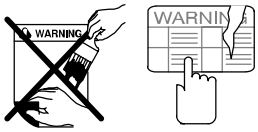

Repair or replace cracked cables.

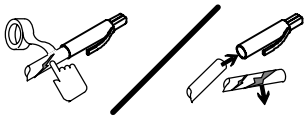

Replace cracked torch body.

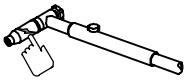

Repair or replace cracked cables and cords.

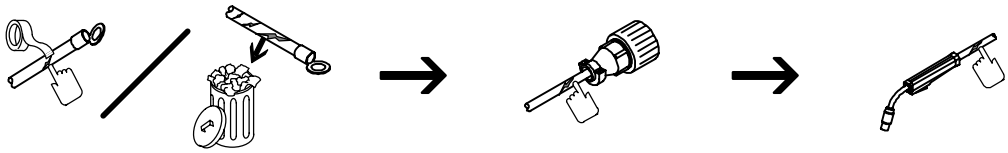

6 Months

Clean and tighten weld terminals.

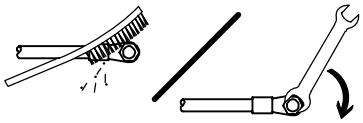

Blow out inside.

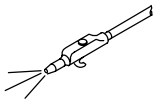

4-2. Blowing Out Inside of Unit

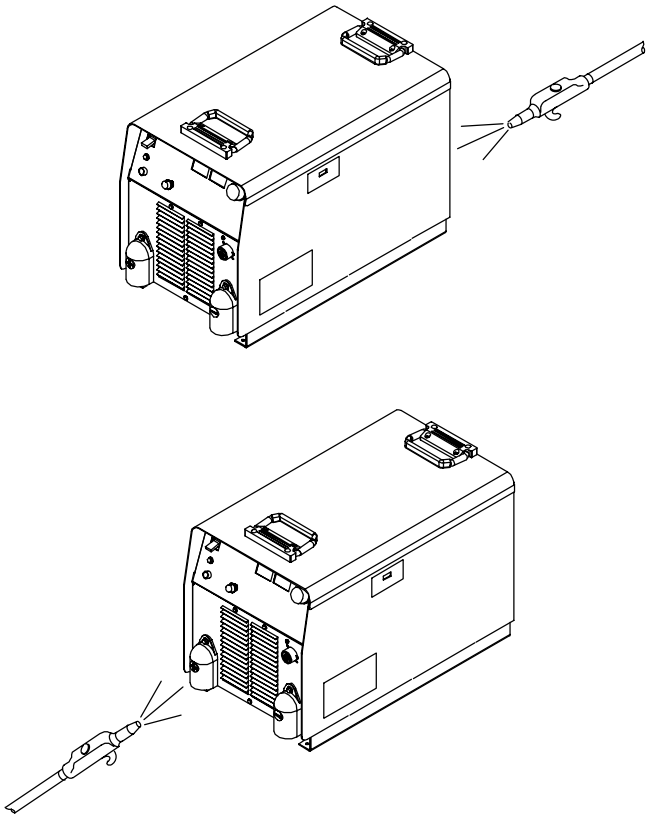

▲ **Do not remove case when blowing out inside of unit.**

To blow out unit, direct airflow through front and back louvers as shown.

ST-801 718

4-3. Removing Right Side Panel and Measuring Input Capacitor Voltage In 230/460 Volt Models

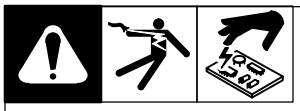

▲ **Significant DC voltage can remain on capacitors after unit is Off. Always check the voltage as shown to be sure the input capacitors have discharged before working on unit.**

Turn Off welding power source, and disconnect input power.

1 Right Side Panel

To remove panel, remove screws securing panel to unit.

2 Relinking Board PC6

3 Voltmeter

Measure the dc voltage across the screw terminals on PC6 as shown until voltage drops to near 0 (zero) volts.

Proceed with job inside unit. Reinstall right side panel when finished.

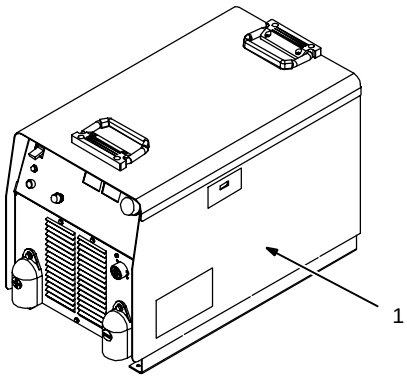

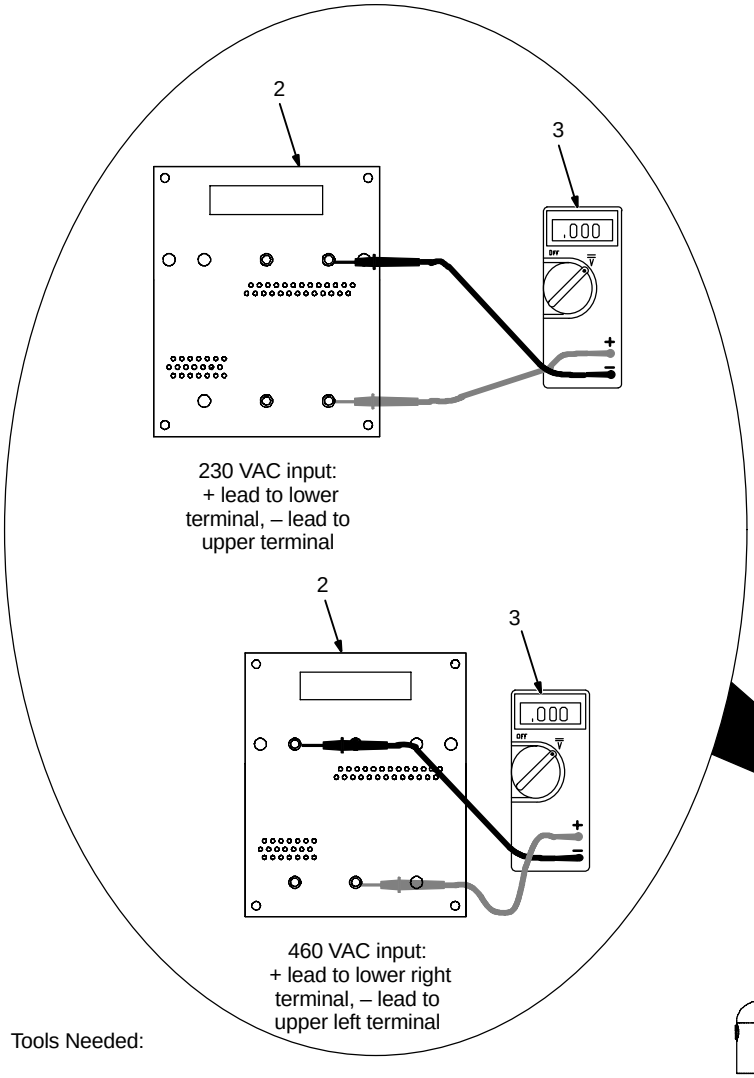

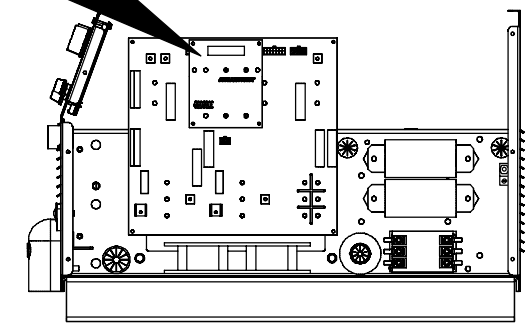

Tools Needed:

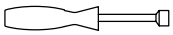

5/16 in

ST-801 718 / ST-801 536-B

4-4. Removing Right Side Panel and Measuring Input Capacitor Voltage in 575 Volt Models

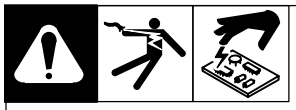

▲ **Significant DC voltage can remain on capacitors after unit is Off. Always check the voltage as shown to be sure the input capacitors have discharged before working on unit.**

Turn Off welding power source, and disconnect input power.

1 Right Side Panel

To remove panel, remove screws securing panel to unit.

2 Interconnect Board PC2

3 Voltmeter

Measure the dc voltage across the screw terminals on PC2 as shown until voltage drops to near 0 (zero) volts.

Proceed with job inside unit. Reinstall right side panel when finished.

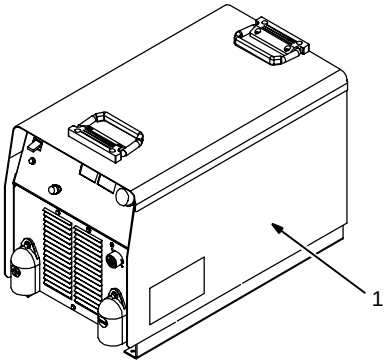

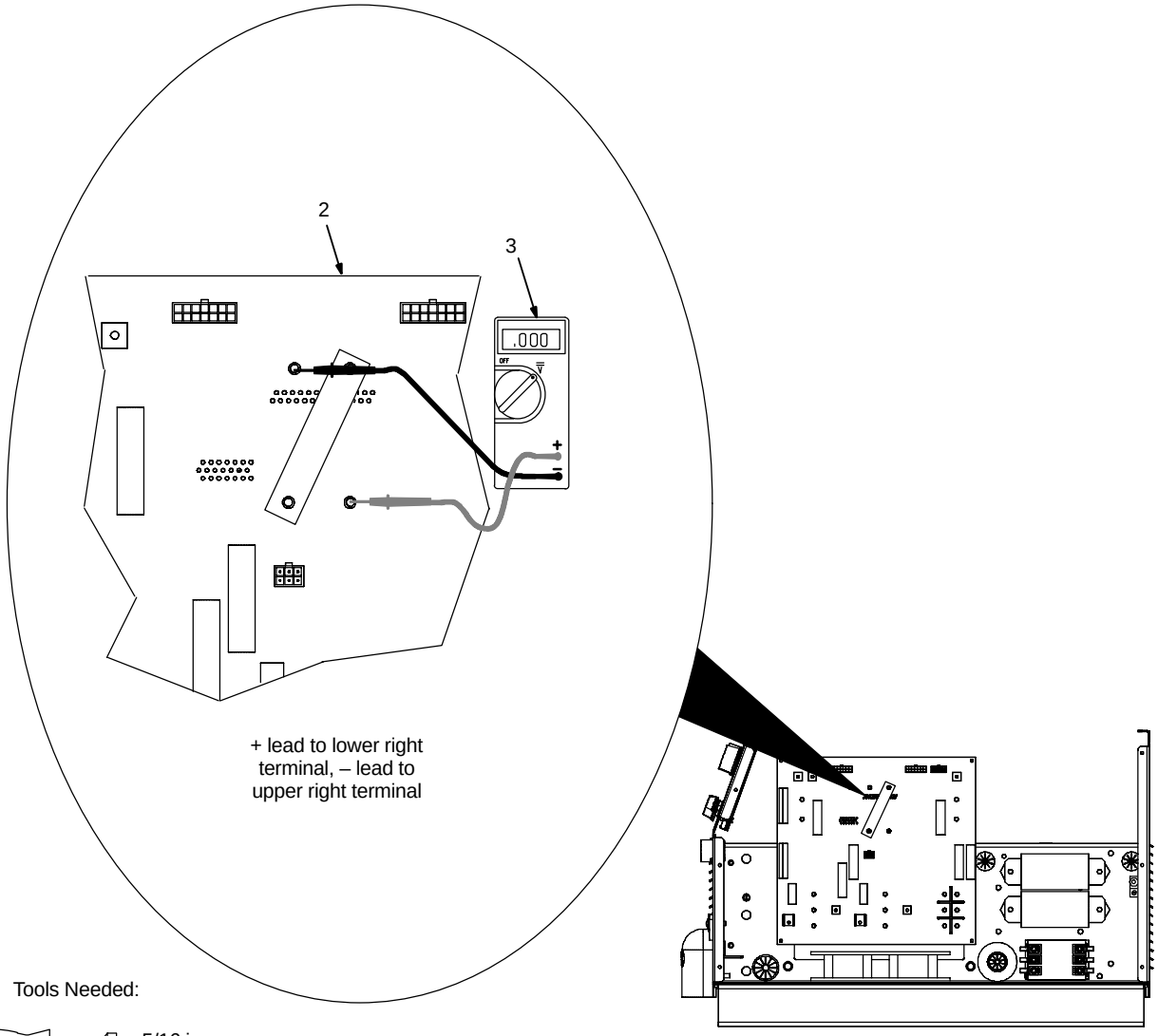

Tools Needed:

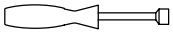

5/16 in

Ref. ST-801 718 / Ref. ST-801 536-A

4-5. Voltmeter/Ammeter Help Displays

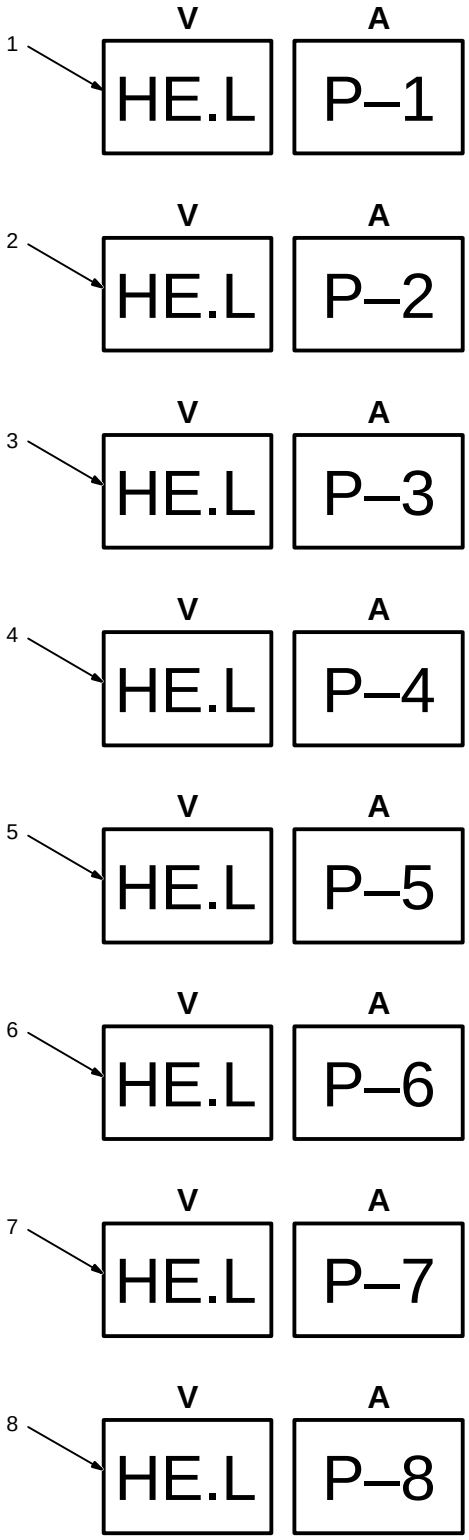

☞ *All directions are in reference to the front of the unit. All circuitry referred to is located inside the unit.*

1 Help 1 Display

Indicates a malfunction in the primary power circuit. If this display is shown, contact a Factory Authorized Service Agent.

2 Help 2 Display

Indicates a malfunction in the thermal protection circuitry located on the left side of the unit. If this display is shown, contact a Factory Authorized Service Agent.

3 Help 3 Display

Indicates the left side of the unit has overheated. The unit has shut down to allow the fan to cool it (see Section 2-2). Operation will continue when the unit has cooled.

4 Help 4 Display

Indicates a malfunction in the thermal protection circuitry located on the right side of the unit. If this display is shown, contact a Factory Authorized Service Agent.

5 Help 5 Display

Indicates the right side of the unit has overheated. The unit has shut down to allow the fan to cool it (see Section 2-2). Operation will continue when the unit has cooled.

6 Help 6 Display

Indicates that the input voltage is too low and the unit has automatically shut down. Operation will continue when the voltage is within ±15% of the operating range. If this display is shown, have an electrician check the input voltage.

7 Help 7 Display

Indicates that the input voltage is too high and the unit has automatically shut down. Operation will continue when the voltage is within ±15% of the operating range. If this display is shown, have an electrician check the input voltage.

8 Help 8 Display

Indicates a malfunction in the secondary power circuit of the unit. If this display is shown, contact a Factory Authorized Service Agent. In addition, when the optional ground current sensor is installed, this display indicates weld current in the ground conductor. When this occurs, have an electrician check the primary and secondary connections.

4-6. Troubleshooting

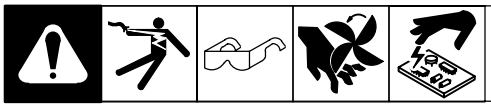

Trouble	Remedy
No weld output; unit completely inoperative.	Place line disconnect switch in On position (see Section 2-11).
	Check and replace line fuse(s), if necessary, or reset circuit breaker (see Section 2-11).
	Check for proper input power connections (see Section 2-11).
No weld output; meter display On.	Check, repair, or replace remote control.
	Unit overheated. Allow unit to cool with fan On (see Section 2-2).
	Check voltmeter/ammeter Help displays.
Erratic or improper weld output.	Use proper size and type of weld cable (see Section 2-9).
	Clean and tighten all weld connections.
No 115 volts ac output at duplex receptacle, Remote 14 receptacle.	Reset circuit breaker CB1 (see Section 2-8).
No 24 volts ac output at Remote 14 receptacle.	Reset circuit breaker CB2 (see Section 2-8).

Notes

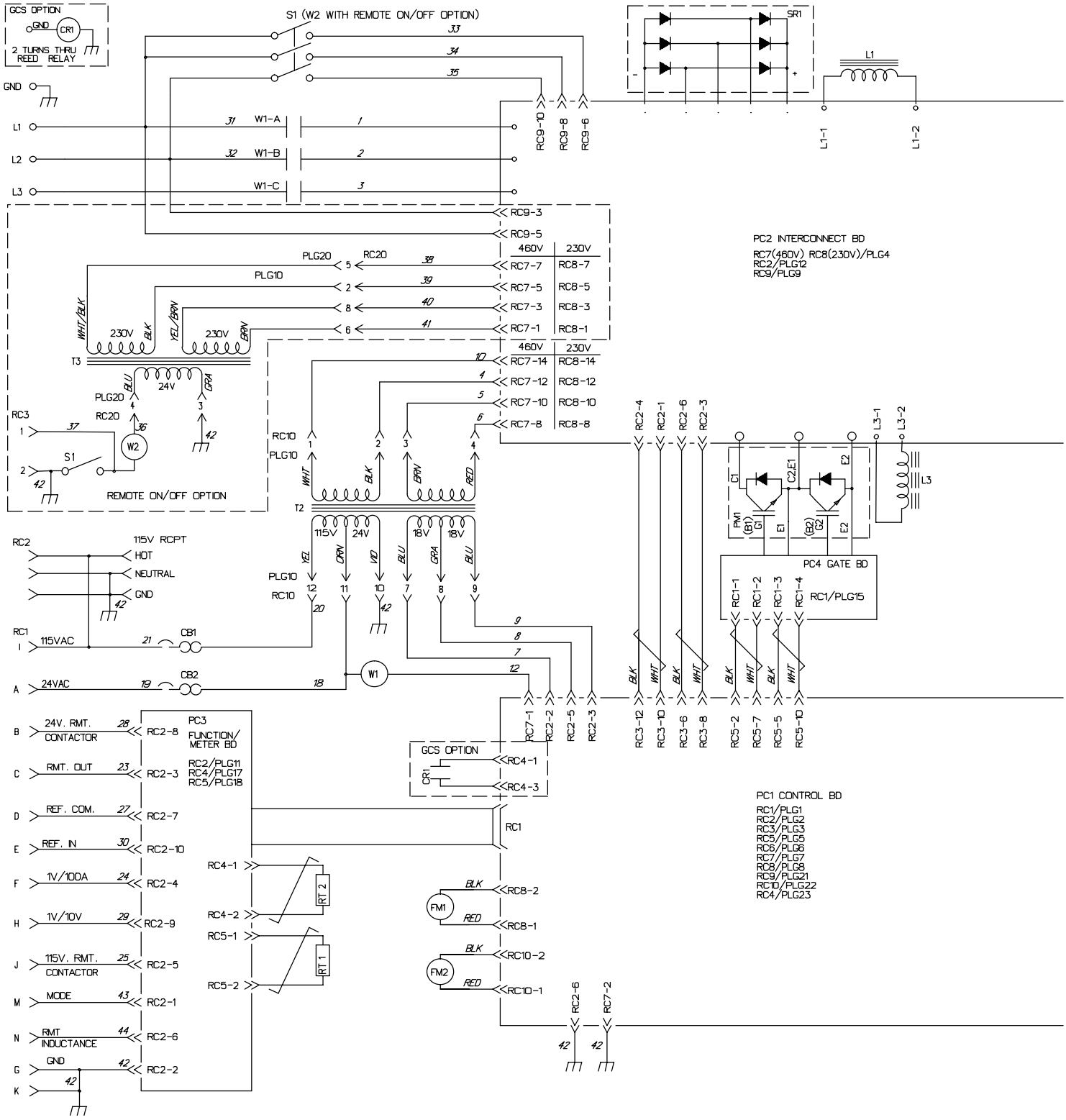

Figure 5-1. Circuit Diagram For Welding Power Sources (230/460 Volt Models)

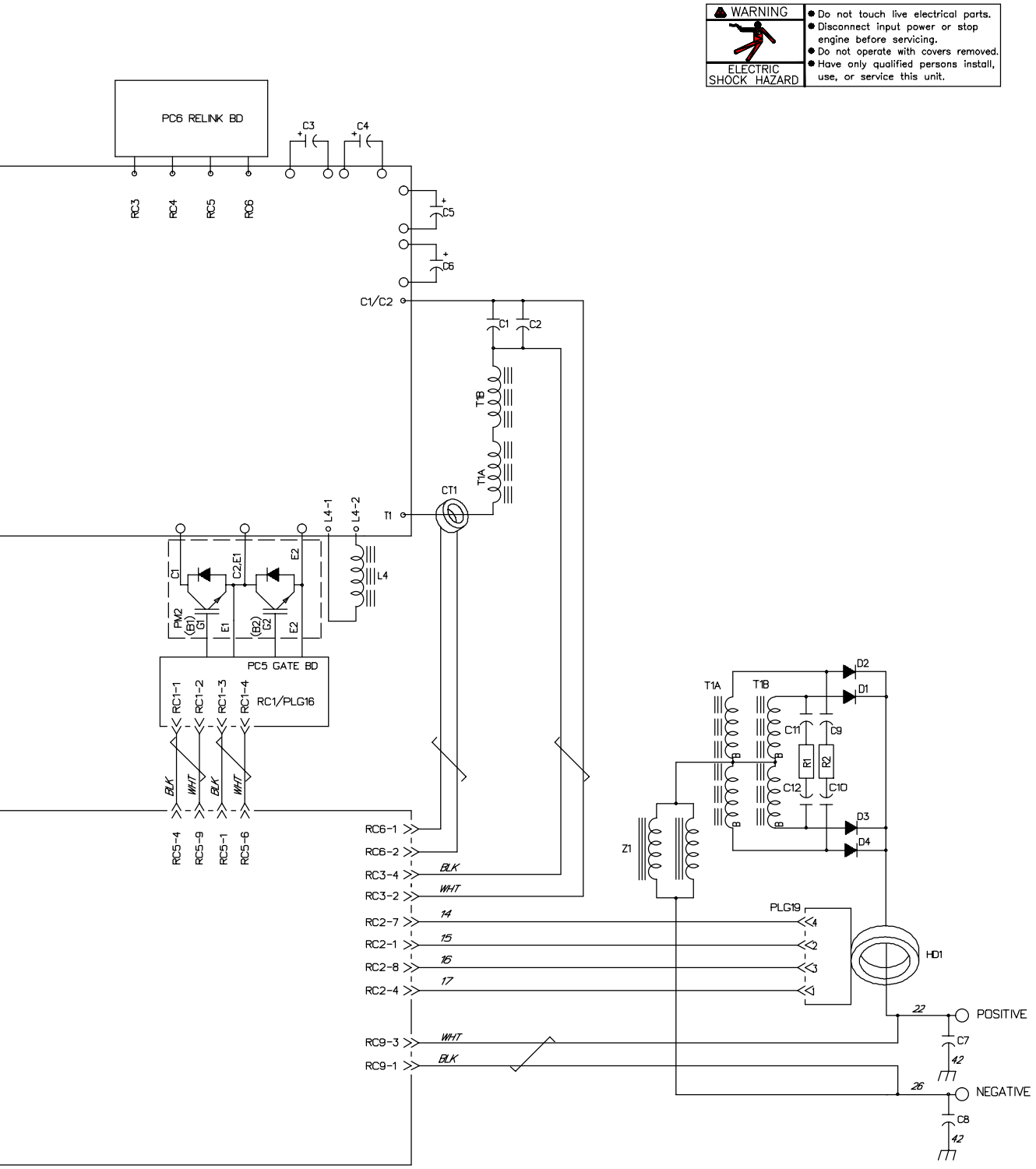
WARNING
ELECTRIC SHOCK HAZARD
Do not touch live electrical parts.
Disconnect input power or stop engine before servicing.
Do not operate with covers removed.
Have only qualified persons install, use, or service this unit.
PC6 RELINK BD
RC3
RC4
RC5
RC6
C3
C4
C5
C6
C1/C2
C1
C2
T1B
T1A
CT1
T1
L4-1
L4-2
L4
PM2
(B1)
G1
E1
C1
C2,E1
(B2)
G2
E2
PC5 GATE BD
RC1-1
RC1-2
RC1-3
RC1-4
RC1/PLG16
BLK
WHT
RC5-4
RC5-9
RC5-1
RC5-6
RC6-1
RC6-2
RC3-4
RC3-2
RC2-7
RC2-1
RC2-8
RC2-4
RC9-3
RC9-1
14
15
16
17
Z1
D1
D2
D3
D4
C11
C9
C12
C10
R1
R2
PLG19
HD1
22
26
POSITIVE
NEGATIVE
C7
C8
42

181 412-D

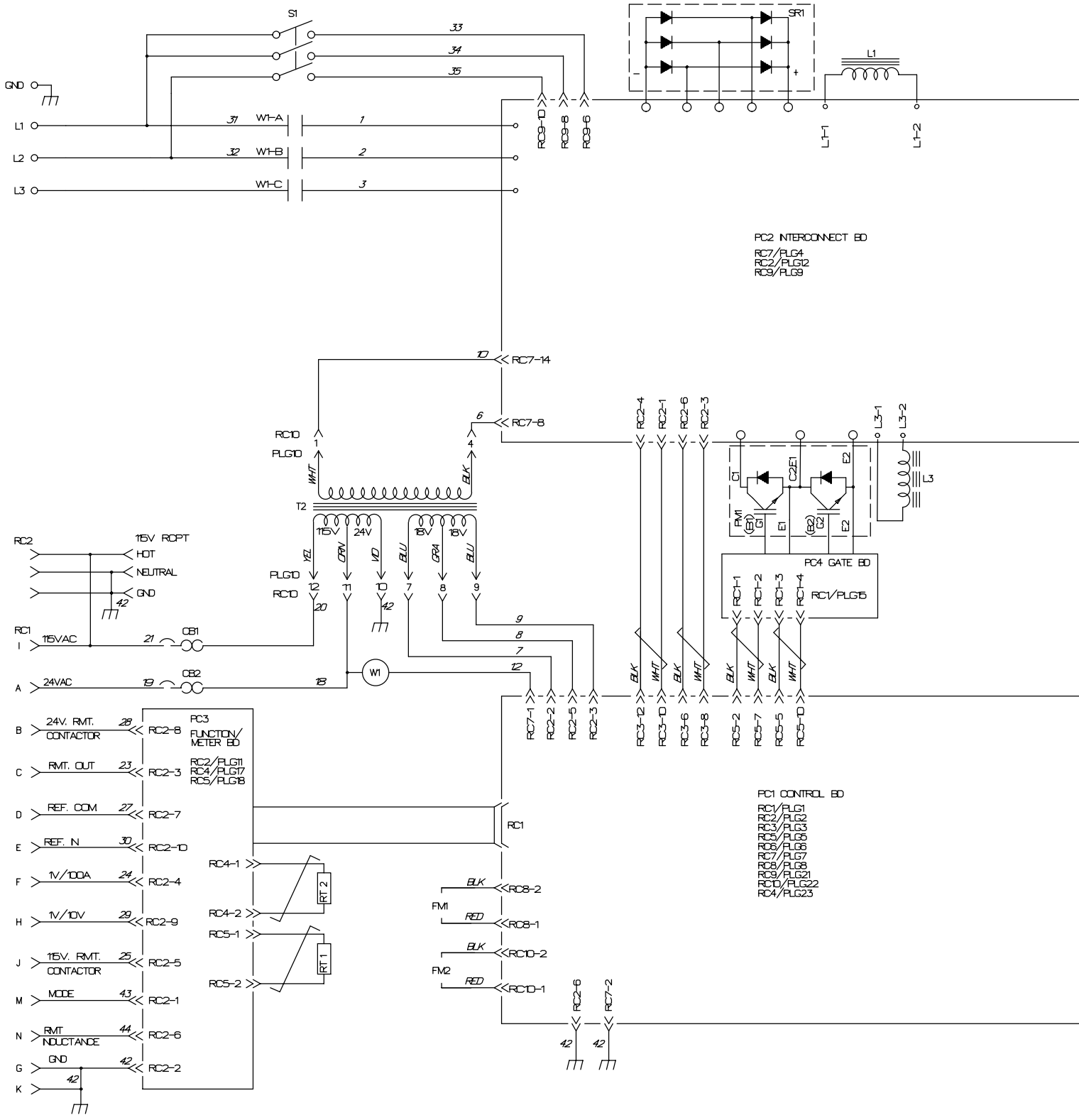

Figure 5-2. Circuit Diagram For Welding Power Sources (575 Volt Models)

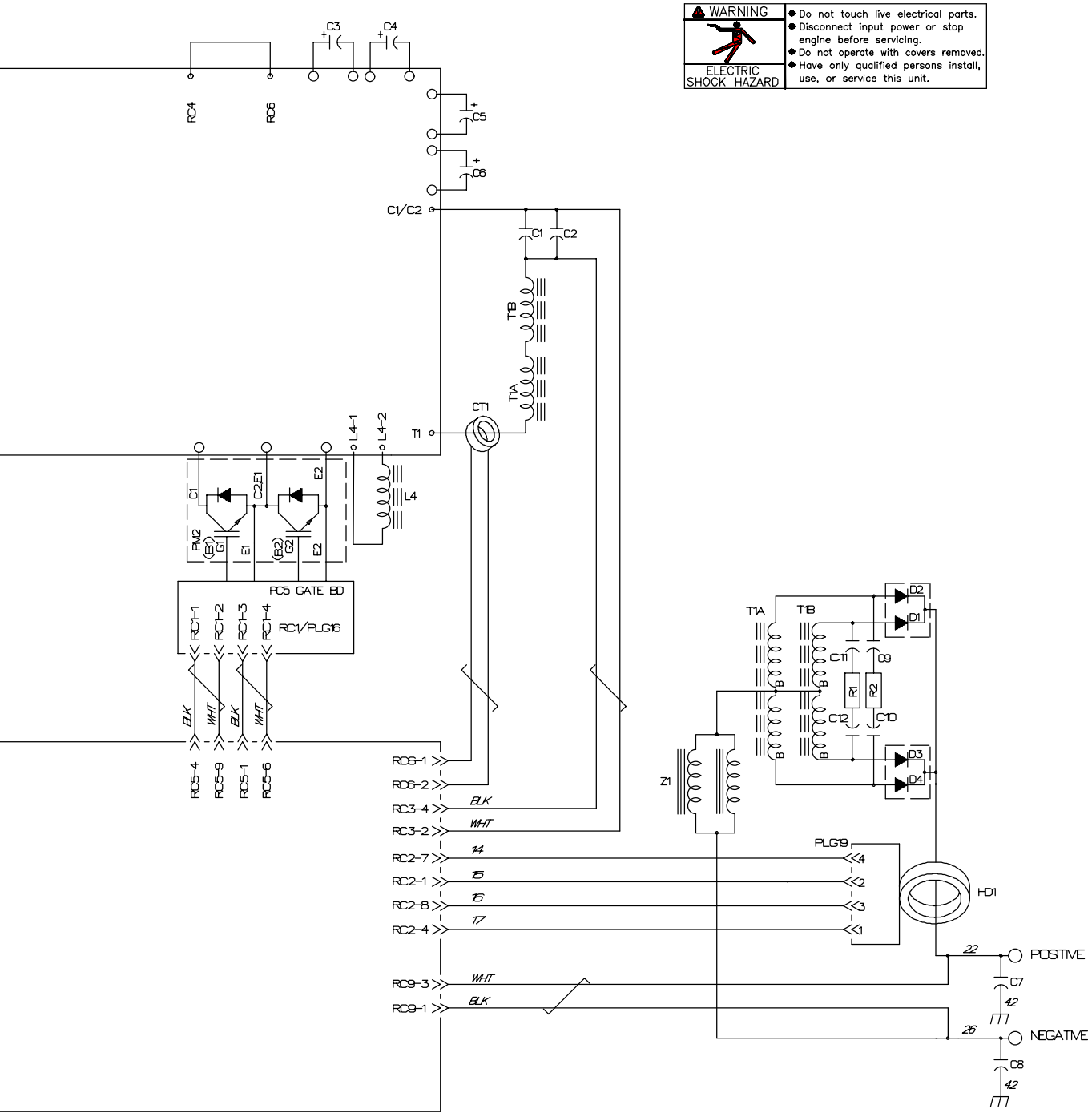
WARNING
ELECTRIC SHOCK HAZARD
Do not touch live electrical parts.
Disconnect input power or stop engine before servicing.
Do not operate with covers removed.
Have only qualified persons install, use, or service this unit.
C3
C4
RC4
RC6
C5
C6
C1/C2
C1
C2
T1B
T1A
CT1
T1
L4-1
L4-2
L4
C1
C2E1
E2
PM2
(B1)
G1
E1
(B2)
G2
E2
PC5 GATE BD
RC1-1
RC1-2
RC1-3
RC1-4
RC1/PLG16
BLK
WHT
BLK
WHT
RC5-4
RC5-9
RC5-1
RC5-6
RC6-1
RC6-2
RC3-4
RC3-2
RC2-7
RC2-1
RC2-8
RC2-4
RC9-3
RC9-1
BLK
WHT
14
15
16
17
WHT
BLK
T1A
T1B
D2
D1
C11
C9
R1
R2
C12
C10
D3
D4
Z1
PLG19
HD1
22
POSITIVE
C7
42
26
NEGATIVE
C8
42

186 987-A

☞ *Hardware is common and not available unless listed.*

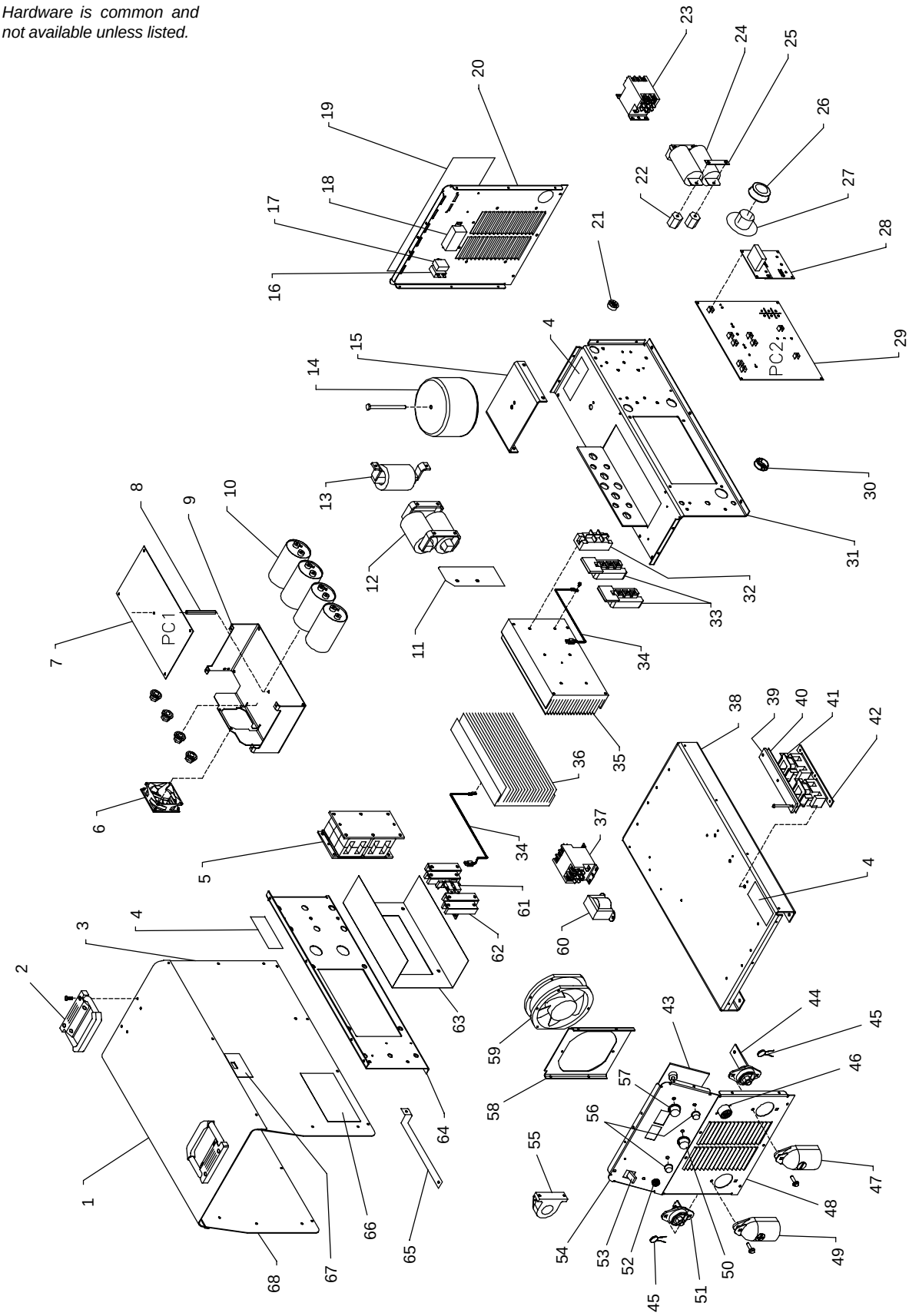

Figure 6-1. Complete Assembly

Item No.	Dia. Mkgs.	Part No.	Description	Quantity

Figure 6-1. Complete Assembly

1		187 234	COVER, top	1
2		195 585	HANDLE	2
3		+190 270	PANEL, side RH (230/460)	1
3		+190 373	PANEL, side RH (575)	1
		178 551	INSULATOR, side	1
4		185 835	LABEL, warning electric shock	3
5	T1	179 933	TRANSFORMER, HF (230/460)	1
5	T1	186 984	TRANSFORMER, HF (575)	1
6	FM2	183 918	MOTOR, fan 24VDC 3000RPM 43CFM w/10 ohm resistor	1
7	PC1	201 451	CIRCUIT CARD ASSEMBLY, control (230/460)	1
7	PC1	201 457	CIRCUIT CARD ASSEMBLY, control (575)	1
8		194 371	SPACER, al 3.500 lg	1
9		194 450	BRACKET, mtg capacitor/PC board/fan	1
10	C3-6	192 935	CAPACITOR, elctlt 2700uf 420 (230/460)	4
10	C3-6	193 738	CAPACITOR, elctlt 1800uf 500 (575)	4
11		181 925	INSULATOR, stabilizer lead	1
12	Z1	180 029	STABILIZER, output	1
13	L1	180 026	INDUCTOR, input	1
14	T2	183 192	TRANSFORMER, control 230/460VAC	1
14	T2	185 232	TRANSFORMER, control 575VAC	1
15		180 105	BRACKET, mtg transformer aux	1
16	CB2	093 995	CIRCUIT BREAKER, man reset 15A	1
17	CB1	083 432	CIRCUIT BREAKER, man reset 10A	1
18	RC2	604 176	RECEPTACLE, str dx grd 3W 15A 120V	1
19		179 847	PLATE, identification (order by model & serial number)	1
		175 282	COVER, receptacle weatherproof	1
20		+179 899	PANEL, rear	1
		181 181	LABEL, warning electric shock	1
21		153 403	BUSHING, snap-in nyl .750 ID x 1.000mtg hole	2
22		025 248	STAND-OFF, insul .250–20 x 1.250 lg	4
23	W1	180 270	CONTACTOR, def prp 40A 3P 24VAC	1
24	C1,2	186 015	CAPACITOR, polyp film .34uf 1000VAC (230/460)	2
24	C1,2	195 939	CAPACITOR, polyp film .22uf 1000VAC (575)	2
25		185 992	BUS BAR, capacitor	2
26	CT1	181 271	TRANSFORMER, current 500 turns	1
27		177 547	BUSHING, snap-in nyl CT–MT 1.125mtg hole	1
28	PC6	180 131	CIRCUIT CARD ASSEMBLY, relink (230/460 only)	1
29	PC2	187 243	CIRCUIT CARD ASSEMBLY, interconnect (230/460)	1
29	PC2	187 244	CIRCUIT CARD ASSEMBLY, interconnect (575)	1
		185 214	BUS BAR,interconnecting (575 only)	2
30		179 276	BUSHING, snap-in nyl 1.000 x 1.375mtg hole	1
31		+194 449	WINDTUNNEL, RH	1
32	SR1	184 260	KIT, diode power module	1
33	PM1,2	184 258	KIT, transistor IGBT module	1
34	RT1,2	173 632	THERMISTOR, NTC 30K ohm @ 25deg C	2
35		179 930	HEAT SINK, power module	1
36		179 931	HEAT SINK, rect quad diode	1
37	W2	♦180 270	CONTACTOR, def prp 40A 3P 24VAC (230/460 only)	1
38		190 272	BASE	1
39		180 271	BRACKET, mtg choke	1
40		182 654	GASKET, DI–DT rubber	1
41	L3,4	180 103	COIL, DI–DT	2
42		176 844	CORE, ferrite	2
43	PC3	190 688	CIRCUIT CARD ASSEMBLY, front panel (Invision 456)	1
		190 380	ASSY, socket/7 segment display	1
43	PC3	190 684	CIRCUIT CARD ASSEMBLY, front panel (Phoenix 456)	1
		190 380	ASSY, socket/7 segment display	1
44		182 707	TERMINAL, power output black	1

Item No.	Dia. Mkgs.	Part No.	Description	Quantity

Figure 6-1. Complete Assembly (Continued)

45	C7,8	186 543	CAPACITOR	2
46	RC1	143 976	RECEPTACLE W/SOCKETS, (service kit)	1
47		180 732	BOOT, neg output stud	1
48		179 898	PANEL, front	1
49		179 848	BOOT, pos output stud	1
50		174 991	KNOB, pointer 1.250 dia x .250 id (Phoenix 456) (230/460 only)	1
51		181 245	TERMINAL, power output red	1
52	RC3	♦186 487	CONN, circ cpc w/terminals (230/460 only)	1
53	S1	128 756	SWITCH, tgl 3PST 40A 600VAC	1
		176 226	INSULATOR, switch power	1
54			NAMEPLATE, (order by model and serial number)	1
55	HD1	168 829	TRANSDUCER, current 1000A max	1
56		174 992	KNOB, pointer .840 dia x .250 id (Invision 456)	1
56		174 992	KNOB, pointer .840 dia x .250 id (Phoenix 456)	2
57		179 851	KNOB, pointer 1.670 dia x .250 id	1
58		179 928	SHROUD, fan	1
59	FM1	175 084	MOTOR, fan 24VDC 3000RPM	1
60	T3	♦181 042	TRANSFORMER (230/460 only)	1
61	R1,2 C9,10,11,12	175 194	RESISTOR/CAPACITOR	2
62	D1-4	179 630	KIT, diode ultra fast recovery	4
63		179 826	INSULATOR, rectifier	1
64		+179 902	WINDTUNNEL, LH	1
		179 276	BUSHING, snap-in nyl 1.000 x 1.375mtg hole	2
66		134 327	LABEL, warning general precautionary	2
67		180 994	LABEL, warning match input power (230/460 only)	1
	PLG4	131 056	HOUSING RECEPTACLE & SOCKETS	1
	RC10	166 679	HOUSING RECEPTACLE PINS & SOCKETS	1
	PLG2	115 092	HOUSING PLUG & SOCKETS	1
	PLG7,19	115 094	HOUSING PLUG & SOCKETS	1
	PLG9,11	115 091	HOUSING PLUG & SOCKETS	1
		♦143 976	RECEPTACLE w/SOCKETS (230/460 only)	1
		♦135 409	HOUSING PLUG & PINS (230/460 only)	1
	PLG3,12	180 776	PLUG, w/leads voltage feedback	1
	PLG5,15,16	175 026	PLUG, w/leads	1
	PLG21	181 410	PLUG, w/leads	1
		♦172 565	CABLE, power 21 in 18ga (230/460 only)	1
		♦185 373	SWITCH, reed (230/460 only)	1
68		190 271	PANEL, side LH	1

♦OPTIONAL

+When ordering a component originally displaying a precautionary label, the label should also be ordered.

To maintain the factory original performance of your equipment, use only Manufacturer's Suggested Replacement Parts. Model and serial number required when ordering parts from your local distributor.

Notes

Notes

Warranty Questions?

Call
1-800-4-A-MILLER
for your local
Miller distributor.

Your distributor also gives you ...

Service
You always get the fast, reliable response you need. Most replacement parts can be in your hands in 24 hours.

Support
Need fast answers to the tough welding questions? Contact your distributor. The expertise of the distributor and Miller is there to help you, every step of the way.

Miller
The Power of Blue.

TRUE BLUE® WARRANTY

Effective January 1, 2000
(Equipment with a serial number preface of “LA” or newer)

This limited warranty supersedes all previous Miller warranties and is exclusive with no other guarantees or warranties expressed or implied.

LIMITED WARRANTY – Subject to the terms and conditions below, Miller Electric Mfg. Co., Appleton, Wisconsin, warrants to its original retail purchaser that new Miller equipment sold after the effective date of this limited warranty is free of defects in material and workmanship at the time it is shipped by Miller. THIS WARRANTY IS EXPRESSLY IN LIEU OF ALL OTHER WARRANTIES, EXPRESS OR IMPLIED, INCLUDING THE WARRANTIES OF MERCHANTABILITY AND FITNESS.

Within the warranty periods listed below, Miller will repair or replace any warranted parts or components that fail due to such defects in material or workmanship. Miller must be notified in writing within thirty (30) days of such defect or failure, at which time Miller will provide instructions on the warranty claim procedures to be followed.

Miller shall honor warranty claims on warranted equipment listed below in the event of such a failure within the warranty time periods. All warranty time periods start on the date that the equipment was delivered to the original retail purchaser, or one year after the equipment is sent to a North American distributor or eighteen months after the equipment is sent to an International distributor.

1. 5 Years Parts – 3 Years Labor
   * Original main power rectifiers
   * Inverters (input and output rectifiers only)
2. 3 Years — Parts and Labor
   * Transformer/Rectifier Power Sources
   * Plasma Arc Cutting Power Sources
   * Semi-Automatic and Automatic Wire Feeders
   * Inverter Power Supplies
   * Intellitig
   * Engine Driven Welding Generators
     (NOTE: Engines are warranted separately by the engine manufacturer.)
3. 1 Year — Parts and Labor
   * DS-2 Wire Feeder
   * Motor Driven Guns (w/exception of Spoolmate 185 & Spoolmate 250)
   * Process Controllers
   * Positioners and Controllers
   * Automatic Motion Devices
   * RFCS Foot Controls
   * Induction Heating Power Sources
   * Water Coolant Systems
   * HF Units
   * Grids
   * Maxstar 140
   * Spot Welders
   * Load Banks
   * Miller Cyclomatic Equipment
   * Running Gear/Trailers
   * Plasma Cutting Torches (except APT & SAF Models)
   * Field Options
     (NOTE: Field options are covered under True Blue® for the remaining warranty period of the product they are installed in, or for a minimum of one year — whichever is greater.)
4. 6 Months — Batteries
5. 90 Days — Parts
   * MIG Guns/TIG Torches
   * Induction Heating Coils and Blankets
   * APT, ZIPCUT & PLAZCUT Model Plasma Cutting Torches
   * Remote Controls
   * Accessory Kits
   * Replacement Parts (No labor)
   * Spoolmate 185 & Spoolmate 250
   * Canvas Covers

Miller’s True Blue® Limited Warranty shall not apply to:

1. **Consumable components; such as contact tips, cutting nozzles, contactors, brushes, slip rings, relays or parts that fail due to normal wear.**
2. Items furnished by Miller, but manufactured by others, such as engines or trade accessories. These items are covered by the manufacturer’s warranty, if any.
3. Equipment that has been modified by any party other than Miller, or equipment that has been improperly installed, improperly operated or misused based upon industry standards, or equipment which has not had reasonable and necessary maintenance, or equipment which has been used for operation outside of the specifications for the equipment.

MILLER PRODUCTS ARE INTENDED FOR PURCHASE AND USE BY COMMERCIAL/INDUSTRIAL USERS AND PERSONS TRAINED AND EXPERIENCED IN THE USE AND MAINTENANCE OF WELDING EQUIPMENT.

In the event of a warranty claim covered by this warranty, the exclusive remedies shall be, at Miller’s option: (1) repair; or (2) replacement; or, where authorized in writing by Miller in appropriate cases, (3) the reasonable cost of repair or replacement at an authorized Miller service station; or (4) payment of or credit for the purchase price (less reasonable depreciation based upon actual use) upon return of the goods at customer’s risk and expense. Miller’s option of repair or replacement will be F.O.B., Factory at Appleton, Wisconsin, or F.O.B. at a Miller authorized service facility as determined by Miller. Therefore no compensation or reimbursement for transportation costs of any kind will be allowed.

TO THE EXTENT PERMITTED BY LAW, THE REMEDIES PROVIDED HEREIN ARE THE SOLE AND EXCLUSIVE REMEDIES. IN NO EVENT SHALL MILLER BE LIABLE FOR DIRECT, INDIRECT, SPECIAL, INCIDENTAL OR CONSEQUENTIAL DAMAGES (INCLUDING LOSS OF PROFIT), WHETHER BASED ON CONTRACT, TORT OR ANY OTHER LEGAL THEORY.

ANY EXPRESS WARRANTY NOT PROVIDED HEREIN AND ANY IMPLIED WARRANTY, GUARANTY OR REPRESENTATION AS TO PERFORMANCE, AND ANY REMEDY FOR BREACH OF CONTRACT TORT OR ANY OTHER LEGAL THEORY WHICH, BUT FOR THIS PROVISION, MIGHT ARISE BY IMPLICATION, OPERATION OF LAW, CUSTOM OF TRADE OR COURSE OF DEALING, INCLUDING ANY IMPLIED WARRANTY OF MERCHANTABILITY OR FITNESS FOR PARTICULAR PURPOSE, WITH RESPECT TO ANY AND ALL EQUIPMENT FURNISHED BY MILLER IS EXCLUDED AND DISCLAIMED BY MILLER.

Some states in the U.S.A. do not allow limitations of how long an implied warranty lasts, or the exclusion of incidental, indirect, special or consequential damages, so the above limitation or exclusion may not apply to you. This warranty provides specific legal rights, and other rights may be available, but may vary from state to state.

In Canada, legislation in some provinces provides for certain additional warranties or remedies other than as stated herein, and to the extent that they may not be waived, the limitations and exclusions set out above may not apply. This Limited Warranty provides specific legal rights, and other rights may be available, but may vary from province to province.

Owner's Record

Please complete and retain with your personal records.

Model Name Serial/Style Number

Purchase Date (Date which equipment was delivered to original customer.)

Distributor

Address

City

State Zip

For Service

Call 1-800-4-A-Miller or see our website at www.MillerWelds.com to locate a DISTRIBUTOR or SERVICE AGENCY near you.

Always provide Model Name and Serial/Style Number.

Contact your Distributor for:

- Welding Supplies and Consumables
- Options and Accessories
- Personal Safety Equipment
- Service and Repair
- Replacement Parts
- Training (Schools, Videos, Books)
- Technical Manuals (Servicing Information and Parts)
- Circuit Diagrams
- Welding Process Handbooks

Contact the Delivering Carrier for:

File a claim for loss or damage during shipment.

For assistance in filing or settling claims, contact your distributor and/or equipment manufacturer's Transportation Department.

Miller Electric Mfg. Co.
An Illinois Tool Works Company
1635 West Spencer Street
Appleton, WI 54914 USA

International Headquarters–USA
USA Phone: 920-735-4505 Auto-Attended
USA & Canada FAX: 920-735-4134
International FAX: 920-735-4125

European Headquarters – United Kingdom
Phone: 44 (0) 1204-593493
FAX: 44 (0) 1204-598066

www.MillerWelds.com

Miller
The Power of Blue.

PRINTED IN USA

© 2001 Miller Electric Mfg. Co. 1/01