OM-1327 213 814AL
2021–06

Processes

MIG (GMAW) Welding
Pulsed MIG (GMAW-P)
Flux Cored (FCAW) Welding

Description

CV DC 3 Phase 1 Phase

Arc Welding Power Source
and Wire Feeder

Millermatic® 350 And Millermatic® 350P

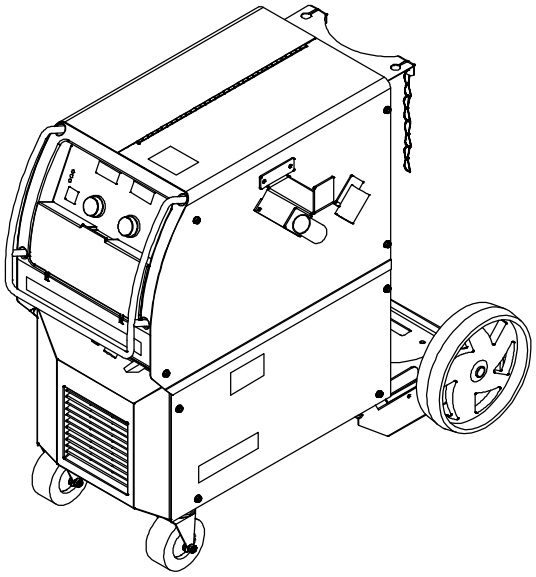

OWNER'S MANUAL

File: MIG (GMAW)

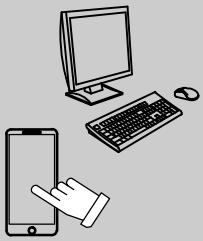

For product information,
Owner's Manual translations,
and more, visit
www.MillerWelds.com

From Miller to You

Thank you and *congratulations* on choosing Miller. Now you can get the job done and get it done right. We know you don't have time to do it any other way.

That's why when Niels Miller first started building arc welders in 1929, he made sure his products offered long-lasting value and superior quality. Like you, his customers couldn't afford anything less. Miller products had to be more than the best they could be. They had to be the best you could buy.

Today, the people that build and sell Miller products continue the tradition. They're just as committed to providing equipment and service that meets the high standards of quality and value established in 1929.

This Owner's Manual is designed to help you get the most out of your Miller products. Please take time to read the Safety Precautions. They will help you protect yourself against potential hazards on the worksite. We've made installation and operation quick and easy. With Miller, you can count on years of reliable service with proper maintenance. And if for some reason the unit needs repair, there's a Troubleshooting section that will help you figure out what the problem is, and our extensive service network is there to help fix the problem. Warranty and maintenance information for your particular model are also provided.

Certified System ™

ISO 9001 Quality

Miller is the first welding equipment manufacturer in the U.S.A. to be registered to the ISO 9001 Quality System Standard.

Miller Electric manufactures a full line of welders and welding-related equipment. For information on other quality Miller products, contact your local Miller distributor to receive the latest full line catalog or individual specification sheets. **To locate your nearest distributor or service agency call 1-800-4-A-Miller, or visit us at www.MillerWelds.com on the web.**

TRUE BLUE® WARRANTY

Working as hard as you do – every power source from Miller is backed by the most hassle-free warranty in the business.

Miller®

TABLE OF CONTENTS

SECTION 1 – SAFETY PRECAUTIONS - READ BEFORE USING 1
1-1. Symbol Usage 1
1-2. Arc Welding Hazards 1
1-3. Additional Hazards For Installation, Operation, And Maintenance 3
1-4. California Proposition 65 Warnings 4
1-5. Principal Safety Standards 4
1-6. EMF Information 4
SECTION 2 – CONSIGNES DE SÉCURITÉ – LIRE AVANT UTILISATION 5
2-1. Symboles utilisés 5
2-2. Dangers relatifs au soudage à l'arc 5
2-3. Symboles de dangers supplémentaires en relation avec l'installation, le fonctionnement et la maintenance 7
2-4. Proposition californienne 65 Avertissements 8
2-5. Principales normes de sécurité 8
2-6. Informations relatives aux CEM 8
SECTION 3 – DEFINITIONS 9
3-1. Additional Safety Symbols And Definitions 9
3-2. Miscellaneous Symbols And Definitions 10
SECTION 4 – SPECIFICATIONS 11
4-1. Serial Number And Rating Label Location 11
4-2. Software Licensing Agreement 11
4-3. Information About Default Weld Parameters And Settings 11
4-4. Unit Specifications 11
4-5. Duty Cycle And Overheating 12
4-6. Volt-Ampere Curve 12
SECTION 5 – INSTALLATION 13
5-1. Selecting A Location 13
5-2. Weld Output Terminals And Selecting Cable Sizes 14
5-3. Connecting To Weld Output Terminals 15
5-4. Installing Work Clamp 16
5-5. Installing Welding Gun/Cable Holder 16
5-6. Installing Welding Gun 17
5-7. Connecting Spoolmatic® 15A Or 30A Gun 18
5-8. Connecting XR Edge, XR-A Gun, XR-A Python, Or XR - Aluma-Pro 19
5-9. Setting Gun Polarity For Wire Type 20
5-10. Installing Gas Supply 21
5-11. Installing Wire Spool And Adjusting Hub Tension 22
5-12. Electrical Service Guide 23
5-13. Selecting Input Voltage (200/230/460 Volt Models Only) 24
5-14. Connecting 3-Phase Input Power 25
5-15. Connecting 1-Phase Input Power 26
5-16. Threading Welding Wire For MIG Gun 27
5-17. Threading Welding Wire For XR Edge, XR-A Gun, XR-A Python, Or XR - Aluma-Pro 28
5-18. Threading Welding Wire Through XR Guns 29
SECTION 6 – OPERATION 30
6-1. Controls 30
6-2. MIG Mode 31
6-3. Jog Mode 31
6-4. Weld Status 31
6-5. MIG Gun-On-Demand 31
6-6. Pulse MIG Mode Voltage Adjustment 31

TABLE OF CONTENTS

6-7. Pulse MIG Gun-On-Demand 31
6-8. Tip Saver 31
6-9. Weld Parameters For MIG Mode 32
6-10. Weld Parameters For Pulse Mode 33
SECTION 7 – PROGRAMMING 34
7-1. MIG Welding Mode 34
7-2. Pulse MIG Welding Mode 35
7-3. Timers 36
7-4. Arc Times, Arc Starts, Hot Start (Aluminum Pulse Only), And Crater Fill 37
7-5. Setting Hot Start (Aluminum Pulse Only) Parameters 38
7-6. Setting Crater Fill 39
7-7. Recommended Crater Fill Parameters 40
7-8. System Reset 42
7-9. Motor Calibration Function 43
7-10. Set Up Push Motor Torque (SUP) 44
SECTION 8 – MAINTENANCE &TROUBLESHOOTING 45
8-1. Routine Maintenance 45
8-2. Overheating 45
8-3. Measuring And Discharging Input Capacitor Voltage 46
8-4. Changing Drive Roll And Wire Inlet Guide 47
8-5. Help Displays 48
8-6. Troubleshooting 50
SECTION 9 – ELECTRICAL DIAGRAM 52
SECTION 10 – PARTS LIST 54
WARRANTY

SECTION 1 – SAFETY PRECAUTIONS - READ BEFORE USING

Protect yourself and others from injury — read, follow, and save these important safety precautions and operating instructions.

1-1. Symbol Usage

DANGER! – Indicates a hazardous situation which, if not avoided, will result in death or serious injury. The possible hazards are shown in the adjoining symbols or explained in the text.

Indicates a hazardous situation which, if not avoided, could result in death or serious injury. The possible hazards are shown in the adjoining symbols or explained in the text.

NOTICE *– Indicates statements not related to personal injury.*

☞ *Indicates special instructions.*

This group of symbols means Warning! Watch Out! ELECTRIC SHOCK, MOVING PARTS, and HOT PARTS hazards. Consult symbols and related instructions below for necessary actions to avoid these hazards.

1-2. Arc Welding Hazards

The symbols shown below are used throughout this manual to call attention to and identify possible hazards. When you see the symbol, watch out, and follow the related instructions to avoid the hazard. The safety information given below is only a summary of the more complete safety information found in the Principal Safety Standards listed in Section 1-5. Read and follow all Safety Standards.

Only qualified persons should install, operate, maintain, and repair this equipment. A qualified person is defined as one who, by possession of a recognized degree, certificate, or professional standing, or who by extensive knowledge, training and experience, has successfully demonstrated the ability to solve or resolve problems relating to the subject matter, the work, or the project and has received safety training to recognize and avoid the hazards involved.

During operation, keep everybody, especially children, away.

ELECTRIC SHOCK can kill.

Touching live electrical parts can cause fatal shocks or severe burns. The electrode and work circuit is electrically live whenever the output is on. The input power circuit and machine internal circuits are also live when power is on. In semiautomatic or automatic wire welding, the wire, wire reel, drive roll housing, and all metal parts touching the welding wire are electrically live. Incorrectly installed or improperly grounded equipment is a hazard.

- Do not touch live electrical parts.
- Wear dry, hole-free insulating gloves and body protection.
- Insulate yourself from work and ground using dry insulating mats or covers big enough to prevent any physical contact with the work or ground.
- Do not use AC weld output in damp, wet, or confined spaces, or if there is a danger of falling.
- Use AC output ONLY if required for the welding process.
- If AC output is required, use remote output control if present on unit.
- Additional safety precautions are required when any of the following electrically hazardous conditions are present: in damp locations or while wearing wet clothing; on metal structures such as floors, gratings, or scaffolds; when in cramped positions such as sitting, kneeling, or lying; or when there is a high risk of unavoidable or accidental contact with the workpiece or ground. For these conditions, use the following equipment in order presented: 1) a semiautomatic DC constant voltage (wire) welder, 2) a DC manual (stick) welder, or 3) an AC welder with reduced open-circuit voltage. In most situations, use of a DC, constant voltage wire welder is recommended. And, do not work alone!
- Disconnect input power or stop engine before installing or servicing this equipment. Lockout/tagout input power according to OSHA 29 CFR 1910.147 (see Safety Standards).
- Properly install, ground, and operate this equipment according to its Owner's Manual and national, state, and local codes.
- Always verify the supply ground – check and be sure that input power cord ground wire is properly connected to ground terminal in disconnect box or that cord plug is connected to a properly grounded receptacle outlet.
- When making input connections, attach proper grounding conductor first – double-check connections.
- Keep cords dry, free of oil and grease, and protected from hot metal and sparks.
- Frequently inspect input power cord and ground conductor for damage or bare wiring – replace immediately if damaged – bare wiring can kill.
- Turn off all equipment when not in use.
- Do not use worn, damaged, undersized, or repaired cables.
- Do not drape cables over your body.
- If earth grounding of the workpiece is required, ground it directly with a separate cable.
- Do not touch electrode if you are in contact with the work, ground, or another electrode from a different machine.
- Do not touch electrode holders connected to two welding machines at the same time since double open-circuit voltage will be present.
- Use only well-maintained equipment. Repair or replace damaged parts at once. Maintain unit according to manual.
- Wear a safety harness if working above floor level.
- Keep all panels and covers securely in place.
- Clamp work cable with good metal-to-metal contact to workpiece or worktable as near the weld as practical.
- Insulate work clamp when not connected to workpiece to prevent contact with any metal object.
- Do not connect more than one electrode or work cable to any single weld output terminal. Disconnect cable for process not in use.
- Use GFCI protection when operating auxiliary equipment in damp or wet locations.

SIGNIFICANT DC VOLTAGE exists in inverter welding power sources AFTER removal of input power.

- Turn off unit, disconnect input power, and discharge input capacitors according to instructions in Manual before touching any parts.

HOT PARTS can burn.

- Do not touch hot parts bare handed.
- Allow cooling period before working on equipment.
- To handle hot parts, use proper tools and/or wear heavy, insulated welding gloves and clothing to prevent burns.

FUMES AND GASES can be hazardous.

Welding produces fumes and gases. Breathing these fumes and gases can be hazardous to your health.

- Keep your head out of the fumes. Do not breathe the fumes.
- Ventilate the work area and/or use local forced ventilation at the arc to remove welding fumes and gases. The recommended way to determine adequate ventilation is to sample for the composition and quantity of fumes and gases to which personnel are exposed.
- If ventilation is poor, wear an approved air-supplied respirator.
- Read and understand the Safety Data Sheets (SDSs) and the manufacturer's instructions for adhesives, coatings, cleaners, consumables, coolants, degreasers, fluxes, and metals.
- Work in a confined space only if it is well ventilated, or while wearing an air-supplied respirator. Always have a trained watchperson nearby. Welding fumes and gases can displace air and lower the oxygen level causing injury or death. Be sure the breathing air is safe.
- Do not weld in locations near degreasing, cleaning, or spraying operations. The heat and rays of the arc can react with vapors to form highly toxic and irritating gases.
- Do not weld on coated metals, such as galvanized, lead, or cadmium plated steel, unless the coating is removed from the weld area, the area is well ventilated, and while wearing an air-supplied respirator. The coatings and any metals containing these elements can give off toxic fumes if welded.

ARC RAYS can burn eyes and skin.

Arc rays from the welding process produce intense visible and invisible (ultraviolet and infrared) rays that can burn eyes and skin. Sparks fly off from the weld.

- Wear an approved welding helmet fitted with a proper shade of filter lenses to protect your face and eyes from arc rays and sparks when welding or watching (see ANSI Z49.1 and Z87.1 listed in Safety Standards).
- Wear approved safety glasses with side shields under your helmet.
- Use protective screens or barriers to protect others from flash, glare and sparks; warn others not to watch the arc.
- Wear body protection made from durable, flame–resistant material (leather, heavy cotton, wool). Body protection includes oil-free clothing such as leather gloves, heavy shirt, cuffless trousers, high shoes, and a cap.

WELDING can cause fire or explosion.

Welding on closed containers, such as tanks, drums, or pipes, can cause them to blow up. Sparks can fly off from the welding arc. The flying sparks, hot workpiece, and hot equipment can cause fires and burns. Accidental contact of electrode to metal objects can cause sparks, explosion, overheating, or fire. Check and be sure the area is safe before doing any welding.

- Remove all flammables within 35 ft (10.7 m) of the welding arc. If this is not possible, tightly cover them with approved covers.
- Do not weld where flying sparks can strike flammable material.
- Protect yourself and others from flying sparks and hot metal.
- Be alert that welding sparks and hot materials from welding can easily go through small cracks and openings to adjacent areas.
- Watch for fire, and keep a fire extinguisher nearby.
- Be aware that welding on a ceiling, floor, bulkhead, or partition can cause fire on the hidden side.
- Do not cut or weld on tire rims or wheels. Tires can explode if heated. Repaired rims and wheels can fail. See OSHA 29 CFR 1910.177 listed in Safety Standards.
- Do not weld on containers that have held combustibles, or on closed containers such as tanks, drums, or pipes unless they are properly prepared according to AWS F4.1 and AWS A6.0 (see Safety Standards).
- Do not weld where the atmosphere can contain flammable dust, gas, or liquid vapors (such as gasoline).
- Connect work cable to the work as close to the welding area as practical to prevent welding current from traveling long, possibly unknown paths and causing electric shock, sparks, and fire hazards.
- Do not use welder to thaw frozen pipes.
- Remove stick electrode from holder or cut off welding wire at contact tip when not in use.
- Wear body protection made from durable, flame–resistant material (leather, heavy cotton, wool). Body protection includes oil-free clothing such as leather gloves, heavy shirt, cuffless trousers, high shoes, and a cap.
- Remove any combustibles, such as a butane lighter or matches, from your person before doing any welding.
- After completion of work, inspect area to ensure it is free of sparks, glowing embers, and flames.
- Use only correct fuses or circuit breakers. Do not oversize or bypass them.
- Follow requirements in OSHA 1910.252 (a) (2) (iv) and NFPA 51B for hot work and have a fire watcher and extinguisher nearby.
- Read and understand the Safety Data Sheets (SDSs) and the manufacturer's instructions for adhesives, coatings, cleaners, consumables, coolants, degreasers, fluxes, and metals.

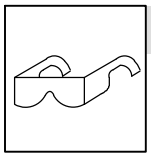

FLYING METAL or DIRT can injure eyes.

- Welding, chipping, wire brushing, and grinding cause sparks and flying metal. As welds cool, they can throw off slag.
- Wear approved safety glasses with side shields even under your welding helmet.

BUILDUP OF GAS can injure or kill.

- Shut off compressed gas supply when not in use.
- Always ventilate confined spaces or use approved air-supplied respirator.

ELECTRIC AND MAGNETIC FIELDS (EMF) can affect Implanted Medical Devices.

- Wearers of Pacemakers and other Implanted Medical Devices should keep away.
- Implanted Medical Device wearers should consult their doctor and the device manufacturer before going near arc welding, spot welding, gouging, plasma arc cutting, or induction heating operations.

NOISE can damage hearing.

Noise from some processes or equipment can damage hearing.

- Wear approved ear protection if noise level is high.

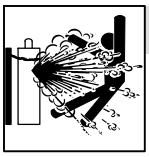

CYLINDERS can explode if damaged.

Compressed gas cylinders contain gas under high pressure. If damaged, a cylinder can explode. Since gas cylinders are normally part of the welding process, be sure to treat them carefully.

- Protect compressed gas cylinders from excessive heat, mechanical shocks, physical damage, slag, open flames, sparks, and arcs.
- Install cylinders in an upright position by securing to a stationary support or cylinder rack to prevent falling or tipping.
- Keep cylinders away from any welding or other electrical circuits.
- Never drape a welding torch over a gas cylinder.
- Never allow a welding electrode to touch any cylinder.
- Never weld on a pressurized cylinder – explosion will result.
- Use only correct compressed gas cylinders, regulators, hoses, and fittings designed for the specific application; maintain them and associated parts in good condition.
- Turn face away from valve outlet when opening cylinder valve. Do not stand in front of or behind the regulator when opening the valve.
- Keep protective cap in place over valve except when cylinder is in use or connected for use.
- Use the proper equipment, correct procedures, and sufficient number of persons to lift, move, and transport cylinders.
- Read and follow instructions on compressed gas cylinders, associated equipment, and Compressed Gas Association (CGA) publication P-1 listed in Safety Standards.

1-3. Additional Hazards For Installation, Operation, And Maintenance

FIRE OR EXPLOSION hazard.

- Do not install or place unit on, over, or near combustible surfaces.
- Do not install unit near flammables.
- Do not overload building wiring – be sure power supply system is properly sized, rated, and protected to handle this unit.

FALLING EQUIPMENT can injure.

- Use lifting eye to lift unit only, NOT running gear, gas cylinders, or any other accessories.
- Use correct procedures and equipment of adequate capacity to lift and support unit.
- If using lift forks to move unit, be sure forks are long enough to extend beyond opposite side of unit.
- Keep equipment (cables and cords) away from moving vehicles when working from an aerial location.
- Follow the guidelines in the Applications Manual for the Revised NIOSH Lifting Equation (Publication No. 94–110) when manually lifting heavy parts or equipment.

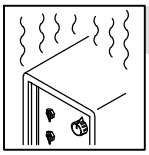

OVERUSE can cause OVERHEATING

- Allow cooling period; follow rated duty cycle.
- Reduce current or reduce duty cycle before starting to weld again.
- Do not block or filter airflow to unit.

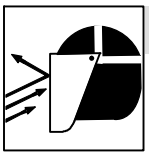

FLYING SPARKS can injure.

- Wear a face shield to protect eyes and face.
- Shape tungsten electrode only on grinder with proper guards in a safe location wearing proper face, hand, and body protection.
- Sparks can cause fires — keep flammables away.

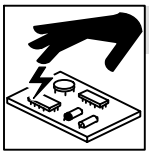

STATIC (ESD) can damage PC boards.

- Put on grounded wrist strap BEFORE handling boards or parts.
- Use proper static-proof bags and boxes to store, move, or ship PC boards.

MOVING PARTS can injure.

- Keep away from moving parts.
- Keep away from pinch points such as drive rolls.

WELDING WIRE can injure.

- Do not press gun trigger until instructed to do so.
- Do not point gun toward any part of the body, other people, or any metal when threading welding wire.

BATTERY EXPLOSION can injure.

- Do not use welder to charge batteries or jump start vehicles unless it has a battery charging feature designed for this purpose.

MOVING PARTS can injure.

- Keep away from moving parts such as fans.
- Keep all doors, panels, covers, and guards closed and securely in place.
- Have only qualified persons remove doors, panels, covers, or guards for maintenance and troubleshooting as necessary.
- Reinstall doors, panels, covers, or guards when maintenance is finished and before reconnecting input power.

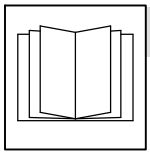

READ INSTRUCTIONS.

- Read and follow all labels and the Owner's Manual carefully before installing, operating, or servicing unit. Read the safety information at the beginning of the manual and in each section.
- Use only genuine replacement parts from the manufacturer.
- Perform installation, maintenance, and service according to the Owner's Manuals, industry standards, and national, state, and local codes.

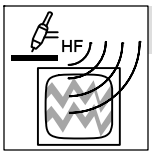

H.F. RADIATION can cause interference.

- High-frequency (H.F.) can interfere with radio navigation, safety services, computers, and communications equipment.

- Have only qualified persons familiar with electronic equipment perform this installation.
- The user is responsible for having a qualified electrician promptly correct any interference problem resulting from the installation.
- If notified by the FCC about interference, stop using the equipment at once.
- Have the installation regularly checked and maintained.
- Keep high-frequency source doors and panels tightly shut, keep spark gaps at correct setting, and use grounding and shielding to minimize the possibility of interference.

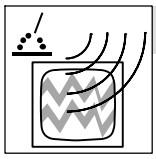

ARC WELDING can cause interference.

- Electromagnetic energy can interfere with sensitive electronic equipment such as computers and computer-driven equipment such as robots.

- Be sure all equipment in the welding area is electromagnetically compatible.
- To reduce possible interference, keep weld cables as short as possible, close together, and down low, such as on the floor.
- Locate welding operation 100 meters from any sensitive electronic equipment.
- Be sure this welding machine is installed and grounded according to this manual.
- If interference still occurs, the user must take extra measures such as moving the welding machine, using shielded cables, using line filters, or shielding the work area.

1-4. California Proposition 65 Warnings

WARNING: This product can expose you to chemicals including lead, which are known to the state of California to cause cancer and birth defects or other reproductive harm.

For more information, go to www.P65Warnings.ca.gov.

1-5. Principal Safety Standards

Safety in Welding, Cutting, and Allied Processes, American Welding Society standard ANSI Standard Z49.1. Website: www.aws.org.

Safe Practice For Occupational And Educational Eye And Face Protection, ANSI Standard Z87.1 from American National Standards Institute. Website: www.ansi.org.

Safe Practices for the Preparation of Containers and Piping for Welding and Cutting, American Welding Society Standard AWS F4.1 from Global Engineering Documents. Website: www.global.ihs.com.

Safe Practices for Welding and Cutting Containers that have Held Combustibles, American Welding Society Standard AWS A6.0 from Global Engineering Documents. Website: www.global.ihs.com.

National Electrical Code, NFPA Standard 70 from National Fire Protection Association. Website: www.nfpa.org and www. sparky.org.

Safe Handling of Compressed Gases in Cylinders, CGA Pamphlet P-1 from Compressed Gas Association. Website:www.cganet.com.

Safety in Welding, Cutting, and Allied Processes, CSA Standard W117.2 from Canadian Standards Association. Website: www.csagroup.org.

Standard for Fire Prevention During Welding, Cutting, and Other Hot Work, NFPA Standard 51B from National Fire Protection Association. Website: www.nfpa.org.

OSHA *Occupational Safety and Health Standards for General Industry*, Title 29, Code of Federal Regulations (CFR), Part 1910.177 Subpart N, Part 1910 Subpart Q, and Part 1926, Subpart J. Website: www.osha.gov.

OSHA *Important Note Regarding the ACGIH TLV, Policy Statement on the Uses of TLVs and BEIs.* Website: www.osha.gov.

Applications Manual for the Revised NIOSH Lifting Equation from the National Institute for Occupational Safety and Health (NIOSH). Website: www.cdc.gov/NIOSH.

1-6. EMF Information

Electric current flowing through any conductor causes localized electric and magnetic fields (EMF). The current from arc welding (and allied processes including spot welding, gouging, plasma arc cutting, and induction heating operations) creates an EMF field around the welding circuit. EMF fields can interfere with some medical implants, e.g. pacemakers. Protective measures for persons wearing medical implants have to be taken. For example, restrict access for passers–by or conduct individual risk assessment for welders. All welders should use the following procedures in order to minimize exposure to EMF fields from the welding circuit:

1. Keep cables close together by twisting or taping them, or using a cable cover.
2. Do not place your body between welding cables. Arrange cables to one side and away from the operator.
3. Do not coil or drape cables around your body.
4. Keep head and trunk as far away from the equipment in the welding circuit as possible.
5. Connect work clamp to workpiece as close to the weld as possible.
6. Do not work next to, sit or lean on the welding power source.
7. Do not weld whilst carrying the welding power source or wire feeder.

About Implanted Medical Devices:

Implanted Medical Device wearers should consult their doctor and the device manufacturer before performing or going near arc welding, spot welding, gouging, plasma arc cutting, or induction heating operations. If cleared by your doctor, then following the above procedures is recommended.

Pour écarter les risques de blessure pour vous–même et pour autrui — lire, appliquer et ranger en lieu sûr ces consignes relatives aux précautions de sécurité et au mode opératoire.

2-1. Symboles utilisés

DANGER! – Indique une situation dangereuse qui si on l'évite pas peut donner la mort ou des blessures graves. Les dangers possibles sont montrés par les symboles joints ou sont expliqués dans le texte.

Indique une situation dangereuse qui si on l'évite pas peut donner la mort ou des blessures graves. Les dangers possibles sont montrés par les symboles joints ou sont expliqués dans le texte.

AVIS *– Indique des déclarations pas en relation avec des blessures personnelles.*

☞ *Indique des instructions spécifiques.*

Ce groupe de symboles veut dire Avertissement! Attention! DANGER DE CHOC ELECTRIQUE, PIECES EN MOUVEMENT, et PIECES CHAUDES. Reportez–vous aux symboles et aux directives ci–dessous afin de connaître les mesures à prendre pour éviter tout danger.

2-2. Dangers relatifs au soudage à l'arc

Les symboles représentés ci-dessous sont utilisés dans ce manuel pour attirer l'attention et identifier les dangers possibles. En présence de l'un de ces symboles, prendre garde et suivre les instructions afférentes pour éviter tout risque. Les consignes de sécurité présentées ci–après ne font que résumer les informations contenues dans les principales normes de sécurité énumérées à la section 2-5. Lire et observer toutes les normes de sécurité.

L'installation, l'utilisation, l'entretien et les réparations ne doivent être confiés qu'à des personnes qualifiées. Une personne qualifiée est définie comme celle qui, par la possession d'un diplôme reconnu, d'un certificat ou d'un statut professionnel, ou qui, par une connaissance, une formation et une expérience approfondies, a démontré avec succès sa capacité à résoudre les problèmes liés à la tâche, le travail ou le projet et a reçu une formation en sécurité afin de reconnaître et d'éviter les risques inhérents.

Pendant le fonctionnement, maintenir à distance toutes les personnes, notamment les enfants de l'appareil.

UNE DÉCHARGE ÉLECTRIQUE peut entraîner la mort.

Le contact d'organes électriques sous tension peut provoquer des accidents mortels ou des brûlures graves. Le circuit de l'électrode et de la pièce est sous tension lorsque le courant est délivré à la sortie. Le circuit d'alimentation et les circuits internes de la machine sont également sous tension lorsque l'alimentation est sur Marche. Dans le mode de soudage avec du fil, le fil, le dérouleur, le bloc de commande du rouleau et toutes les parties métalliques en contact avec le fil sont sous tension électrique. Un équipement installé ou mis à la terre de manière incorrecte ou impropre constitue un danger.

- Ne pas toucher aux pièces électriques sous tension.
- Porter des gants isolants et des vêtements de protection secs et sans trous.
- S'isoler de la pièce à couper et du sol en utilisant des housses ou des tapis assez grands afin d'éviter tout contact physique avec la pièce à couper ou le sol.
- Ne pas utiliser de sortie de soudage CA dans des zones humides ou confinées ou s'il y a un risque de chute.
- Se servir d'une source électrique à courant électrique UNIQUEMENT si le procédé de soudage le demande.
- Si l'utilisation d'une source électrique à courant électrique s'avère nécessaire, se servir de la fonction de télécommande si l'appareil en est équipé.
- D'autres consignes de sécurité sont nécessaires dans les conditions suivantes : risques électriques dans un environnement humide ou si l'on porte des vêtements mouillés ; sur des structures métalliques telles que sols, grilles ou échafaudages ; en position coincée comme assise, à genoux ou couchée ; ou s'il y a un risque élevé de contact inévitable ou accidentel avec la pièce à souder ou le sol. Dans ces conditions, utiliser les équipements suivants, dans l'ordre indiqué : 1) un poste à souder DC à tension constante (à fil), 2) un poste à souder DC manuel (électrode) ou 3) un poste à souder AC à tension à vide réduite. Dans la plupart des situations, l'utilisation d'un poste à souder DC à fil à tension constante est recommandée. En outre, ne pas travailler seul !
- Couper l'alimentation ou arrêter le moteur avant de procéder à l'installation, à la réparation ou à l'entretien de l'appareil. Déverrouiller l'alimentation selon la norme OSHA 29 CFR 1910.147 (voir normes de sécurité).
- Installez, mettez à la terre et utilisez correctement cet équipement conformément à son Manuel d'Utilisation et aux réglementations nationales, gouvernementales et locales.
- Toujours vérifier la terre du cordon d'alimentation. Vérifier et s'assurer que le fil de terre du cordon d'alimentation est bien raccordé à la borne de terre du sectionneur ou que la fiche du cordon est raccordée à une prise correctement mise à la terre.
- En effectuant les raccordements d'entrée, fixer d'abord le conducteur de mise à la terre approprié et contre-vérifier les connexions.
- Les câbles doivent être exempts d'humidité, d'huile et de graisse; protégez–les contre les étincelles et les pièces métalliques chaudes.
- Vérifier fréquemment le cordon d'alimentation et le conducteur de mise à la terre afin de s'assurer qu'il n'est pas altéré ou dénudé –, le remplacer immédiatement s'il l'est –. Un fil dénudé peut entraîner la mort.
- L'équipement doit être hors tension lorsqu'il n'est pas utilisé.
- Ne pas utiliser des câbles usés, endommagés, de grosseur insuffisante ou mal épissés.
- Ne pas enrouler les câbles autour du corps.
- Si la pièce soudée doit être mise à la terre, le faire directement avec un câble distinct.
- Ne pas toucher l'électrode quand on est en contact avec la pièce, la terre ou une électrode provenant d'une autre machine.
- Ne pas toucher des porte électrodes connectés à deux machines en même temps à cause de la présence d'une tension à vide doublée.
- N'utiliser qu'un matériel en bon état. Réparer ou remplacer sur-le-champ les pièces endommagées. Entretenir l'appareil conformément à ce manuel.
- Porter un harnais de sécurité si l'on doit travailler au-dessus du sol.
- S'assurer que tous les panneaux et couvercles sont correctement en place.
- Fixer le câble de retour de façon à obtenir un bon contact métal-métal avec la pièce à souder ou la table de travail, le plus près possible de la soudure.
- Isoler la pince de masse quand pas mis à la pièce pour éviter le contact avec tout objet métallique.
- Ne pas raccorder plus d'une électrode ou plus d'un câble de masse à une même borne de sortie de soudage. Débrancher le câble pour le procédé non utilisé.
- Utiliser une protection différentielle lors de l'utilisation d'un équipement auxiliaire dans des endroits humides ou mouillés.

Il reste une TENSION DC NON NÉGLIGEABLE dans les sources de soudage onduleur UNE FOIS l'alimentation coupée.

- Éteignez l'unité, débranchez le courant électrique, et déchargez les condensateurs d'alimentation selon les instructions indiquées dans le manuel avant de toucher les pièces.

LES PIÈCES CHAUDES peuvent provoquer des brûlures.

- Ne pas toucher à mains nues les parties chaudes.
- Prévoir une période de refroidissement avant de travailler à l'équipement.
- Ne pas toucher aux pièces chaudes, utiliser les outils recommandés et porter des gants de soudage et des vêtements épais pour éviter les brûlures.

LES FUMÉES ET LES GAZ peuvent être dangereux.

Le soudage génère des fumées et des gaz. Leur inhalation peut être dangereux pour votre santé.

- Eloigner votre tête des fumées. Ne pas respirer les fumées.
- À l'intérieur, ventiler la zone et/ou utiliser une ventilation forcée au niveau de l'arc pour l'évacuation des fumées et des gaz de soudage. Pour déterminer la bonne ventilation, il est recommandé de procéder à un prélèvement pour la composition et la quantité de fumées et de gaz auxquelles est exposé le personnel.
- Si la ventilation est médiocre, porter un respirateur anti-vapeurs approuvé.
- Lire et comprendre les fiches de données de sécurité et les instructions du fabricant concernant les adhésifs, les revêtements, les nettoyants, les consommables, les produits de refroidissement, les dégraisseurs, les flux et les métaux.
- Travailler dans un espace fermé seulement s'il est bien ventilé ou en portant un respirateur à alimentation d'air. Demander toujours à un surveillant dûment formé de se tenir à proximité. Des fumées et des gaz de soudage peuvent déplacer l'air et abaisser le niveau d'oxygène provoquant des blessures ou des accidents mortels. S'assurer que l'air de respiration ne présente aucun danger.
- Ne pas souder dans des endroits situés à proximité d'opérations de dégraissage, de nettoyage ou de pulvérisation. La chaleur et les rayons de l'arc peuvent réagir en présence de vapeurs et former des gaz hautement toxiques et irritants.
- Ne pas souder des métaux munis d'un revêtement, tels que l'acier galvanisé, plaqué en plomb ou au cadmium à moins que le revêtement n'ait été enlevé dans la zone de soudure, que l'endroit soit bien ventilé, et en portant un respirateur à alimentation d'air. Les revêtements et tous les métaux renfermant ces éléments peuvent dégager des fumées toxiques en cas de soudage.

LES RAYONS DE L'ARC peuvent provoquer des brûlures dans les yeux et sur la peau.

Le rayonnement de l'arc du procédé de soudage génèr des rayons visibles et invisibles intenses (ultraviolets e infrarouges) susceptibles de provoquer des brûlures dans les yeux et sur l peau. Des étincelles sont projetées pendant le soudage.

- Porter un casque de soudage approuvé muni de verres filtrants approprié pour protéger visage et yeux pour protéger votre visage et vos yeux pendant le soudage ou pour regarder (voir ANSI Z49.1 et Z87.1 énuméré dans les normes de sécurité).
- Porter des lunettes de sécurité avec écrans latéraux même sous votre casque.
- Avoir recours à des écrans protecteurs ou à des rideaux pour protéger les autres contre les rayonnements les éblouissements et les étincelles ; prévenir toute personne sur les lieux de ne pas regarder l'arc.
- Porter un équipement de protection pour le corps fait d'un matériau résistant et ignifuge (cuir, coton robuste, laine). La protection du corps comporte des vêtements sans huile comme par ex. des gants de cuir, une chemise solide, des pantalons sans revers, des chaussures hautes et une casquette.

LE SOUDAGE peut provoquer un incendie ou une explosion.

Le soudage effectué sur des conteneurs fermés tels que des réservoirs, tambours ou des conduites peut provoquer leur éclatement. Des étincelles peuvent être projetées de l'arc de soudure. La projection d'étincelles, des pièces chaudes et des équipements chauds peut provoquer des incendies et des brûlures. Le contact accidentel de l'électrode avec des objets métalliques peut provoquer des étincelles, une explosion, un surchauffement ou un incendie. Avant de commencer le soudage, vérifier et s'assurer que l'endroit ne présente pas de danger.

- Déplacer toutes les substances inflammables à une distance de 10,7 m de l'arc de soudage. En cas d'impossibilité les recouvrir soigneusement avec des protections homologués.
- Ne pas souder dans un endroit là où des étincelles peuvent tomber sur des substances inflammables.
- Se protéger et d'autres personnes de la projection d'étincelles et de métal chaud.
- Des étincelles et des matériaux chauds du soudage peuvent facilement passer dans d'autres zones en traversant de petites fissures et des ouvertures.
- Surveiller tout déclenchement d'incendie et tenir un extincteur à proximité.
- Le soudage effectué sur un plafond, plancher, paroi ou séparation peut déclencher un incendie de l'autre côté.
- Ne pas couper ou souder des jantes ou des roues. Les pneus peuvent exploser s'ils sont chauffés. Les jantes et les roues réparées peuvent défaillir. Voir OSHA 29 CFR 1910.177 énuméré dans les normes de sécurité.
- Ne pas effectuer le soudage sur des conteneurs fermés tels que des réservoirs, tambours, ou conduites, à moins qu'ils n'aient été préparés correctement conformément à AWS F4.1 et AWS A6.0 (voir les Normes de Sécurité).
- Ne pas souder là où l'air ambiant pourrait contenir des poussières, gaz ou émanations inflammables (vapeur d'essence, par exemple).
- Brancher le câble de masse sur la pièce le plus près possible de la zone de soudage pour éviter le transport du courant sur une longue distance par des chemins inconnus éventuels en provoquant des risques d'électrocution, d'étincelles et d'incendie.
- Ne pas utiliser le poste de soudage pour dégeler des conduites gelées.
- En cas de non utilisation, enlever la baguette d'électrode du porte-électrode ou couper le fil à la pointe de contact.
- Porter un équipement de protection pour le corps fait d'un matériau résistant et ignifuge (cuir, coton robuste, laine). La protection du corps comporte des vêtements sans huile comme par ex. des gants de cuir, une chemise solide, des pantalons sans revers, des chaussures hautes et une casquette.
- Avant de souder, retirer toute substance combustible de vos poches telles qu'un allumeur au butane ou des allumettes.
- Une fois le travail achevé, assurez–vous qu'il ne reste aucune trace d'étincelles incandescentes ni de flammes.
- Utiliser exclusivement des fusibles ou coupe–circuits appropriés. Ne pas augmenter leur puissance; ne pas les ponter.
- Suivre les recommandations dans OSHA 1910.252(a)(2)(iv) et NFPA 51B pour les travaux à chaud et avoir de la surveillance et un extincteur à proximité.
- Lire et comprendre les fiches de données de sécurité et les instructions du fabricant concernant les adhésifs, les revêtements, les nettoyants, les consommables, les produits de refroidissement, les dégraisseurs, les flux et les métaux.

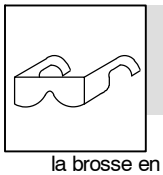

DES PIECES DE METAL ou DES SALETES peuvent provoquer des blessures dans les yeux.

- Le soudage, l'écaillement, le passage de la pièce à la brosse en fil de fer, et le meulage génèrent des étincelles et des particules métalliques volantes. Pendant la période de refroidissement des soudures, elles risquent de projeter du laitier.
- Porter des lunettes de sécurité avec écrans latéraux ou un écran facial.

LES ACCUMULATIONS DE GAZ risquent de provoquer des blessures ou même la mort.

- Fermer l'alimentation du gaz comprimé en cas de non utilisation.
- Veiller toujours à bien aérer les espaces confinés ou se servir d'un respirateur d'adduction d'air homologué.

Les CHAMPS ÉLECTROMAGNÉTIQUES (CEM) peuvent affecter les implants médicaux.

- Les porteurs de stimulateurs cardiaques et autres implants médicaux doivent rester à distance.
- Les porteurs d'implants médicaux doivent consulter leur médecin et le fabricant du dispositif avant de s'approcher de la zone où se déroule du soudage à l'arc, du soudage par points, du gougeage, de la découpe plasma ou une opération de chauffage par induction.

LE BRUIT peut endommager l'ouïe.

Le bruit des processus et des équipements peut affecter l'ouïe.

- Porter des protections approuvées pour les oreilles si le niveau sonore est trop élevé.

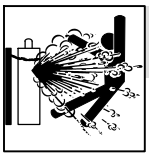

LES BOUTEILLES peuvent exploser si elles sont endommagées.

Les bouteilles de gaz comprimé contiennent du gaz sous haute pression. Si une bouteille est endommagée, elle peut exploser. Du fait que les bouteilles de gaz font normalement partie du procédé de soudage, les manipuler avec précaution.

- Protéger les bouteilles de gaz comprimé d'une chaleur excessive, des chocs mécaniques, des dommages physiques, du laitier, des flammes ouvertes, des étincelles et des arcs.
- Placer les bouteilles debout en les fixant dans un support stationnaire ou dans un porte-bouteilles pour les empêcher de tomber ou de se renverser.
- Tenir les bouteilles éloignées des circuits de soudage ou autres circuits électriques.
- Ne jamais placer une torche de soudage sur une bouteille à gaz.
- Une électrode de soudage ne doit jamais entrer en contact avec une bouteille.
- Ne jamais souder une bouteille pressurisée – risque d'explosion.
- Utiliser seulement des bouteilles de gaz comprimé, régulateurs, tuyaux et raccords convenables pour cette application spécifique; les maintenir ainsi que les éléments associés en bon état.
- Tourner le dos à la sortie de vanne lors de l'ouverture de la vanne de la bouteille. Ne pas se tenir devant ou derrière le régulateur lors de l'ouverture de la vanne.
- Le couvercle du détendeur doit toujours être en place, sauf lorsque la bouteille est utilisée ou qu'elle est reliée pour usage ultérieur.
- Utilisez les équipements corrects, les bonnes procédures et suffisamment de personnes pour soulever, déplacer et transporter les bouteilles.
- Lire et suivre les instructions sur les bouteilles de gaz comprimé, l'équipement connexe et le dépliant P-1 de la CGA (Compressed Gas Association) mentionné dans les principales normes de sécurité.

2-3. Symboles de dangers supplémentaires en relation avec l'installation, le fonctionnement et la maintenance

Risque D'INCENDIE OU D'EXPLOSION.

- Ne pas placer l'appareil sur, au-dessus ou à proximité de surfaces inflammables.
- Ne pas installer l'appareil à proximité de produits inflammables.
- Ne pas surcharger l'installation électrique – s'assurer que l'alimentation est correctement dimensionnée et protégée avant de mettre l'appareil en service.

LA CHUTE DE L'ÉQUIPEMENT peut provoquer des blessures.

- Utiliser l'anneau de levage uniquement pour soulever l'appareil, NON PAS les chariots, les bouteilles de gaz ou tout autre accessoire.
- Utilisez les procédures correctes et des équipements d'une capacité appropriée pour soulever et supporter l'appareil.
- En utilisant des fourches de levage pour déplacer l'unité, s'assurer que les fourches sont suffisamment longues pour dépasser du côté opposé de l'appareil.
- Tenir l'équipement (câbles et cordons) à distance des véhicules mobiles lors de toute opération en hauteur.
- Suivre les consignes du Manuel des applications pour l'équation de levage NIOSH révisée (Publication Nº94–110) lors du levage manuelle de pièces ou équipements lourds.

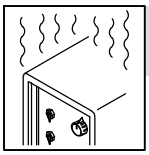

L'EMPLOI EXCESSIF peut SURCHAUFFER L'ÉQUIPEMENT.

- Prévoir une période de refroidissement ; respecter le cycle opératoire nominal.
- Réduire le courant ou le facteur de marche avant de poursuivre le soudage.
- Ne pas obstruer les passages d'air du poste.

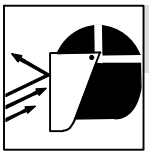

LES ÉTINCELLES PROJETÉES peuvent provoquer des blessures.

- Porter un écran facial pour protéger le visage et les yeux.
- Affûter l'électrode au tungstène uniquement à la meuleuse dotée de protecteurs. Cette manœuvre est à exécuter dans un endroit sûr lorsque l'on porte l'équipement homologué de protection du visage, des mains et du corps.
- Les étincelles risquent de causer un incendie – éloigner toute substance inflammable.

LES CHARGES ÉLECTROSTATIQUES peuvent endommager les circuits imprimés.

- Établir la connexion avec la barrette de terre avant de manipuler des cartes ou des pièces.
- Utiliser des pochettes et des boîtes antistatiques pour stocker, déplacer ou expédier des cartes de circuits imprimes.

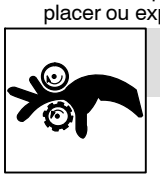

Les PIÈCES MOBILES peuvent causer des blessures.

- Ne pas s'approcher des organes mobiles.
- Ne pas s'approcher des points de coincement tels que des rouleaux de commande.

LES FILS DE SOUDAGE peuvent provoquer des blessures.

- Ne pas appuyer sur la gâchette avant d'en avoir reçu l'instruction.
- Ne pas diriger le pistolet vers soi, d'autres personnes ou toute pièce mécanique en engageant le fil de soudage.

L'EXPLOSION DE LA BATTERIE peut provoquer des blessures.

- Ne pas utiliser l'appareil de soudage pour charger des batteries ou faire démarrer des véhicules à l'aide de câbles de démarrage, sauf si l'appareil dispose d'une fonctionnalité de charge de batterie destinée à cet usage.

Les PIÈCES MOBILES peuvent causer des blessures.

- S'abstenir de toucher des organes mobiles tels que des ventilateurs.
- Maintenir fermés et verrouillés les portes, panneaux, recouvrements et dispositifs de protection.
- Lorsque cela est nécessaire pour des travaux d'entretien et de dépannage, faire retirer les portes, panneaux, recouvrements ou dispositifs de protection uniquement par du personnel qualifié.
- Remettre les portes, panneaux, recouvrements ou dispositifs de protection quand l'entretien est terminé et avant de rebrancher l'alimentation électrique.

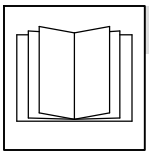

LIRE LES INSTRUCTIONS.

- Lire et appliquer les instructions sur les étiquettes et le Mode d'emploi avant l'installation, l'utilisation ou l'entretien de l'appareil. Lire les informations de sécurité au début du manuel et dans chaque section.
- N'utiliser que les pièces de rechange recommandées par le constructeur.
- Effectuer l'installation, l'entretien et toute intervention selon les manuels d'utilisateurs, les normes nationales, provinciales et de l'industrie, ainsi que les codes municipaux.

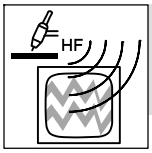

LE RAYONNEMENT HAUTE FRÉQUENCE (H.F.) risque de provoquer des interférences.

- Le rayonnement haute fréquence (H.F.) peut provoquer des interférences avec les équipements de radio−navigation et de communication, les services de sécurité et les ordinateurs.
- Demander seulement à des personnes qualifiées familiarisées avec des équipements électroniques de faire fonctionner l'installation.
- L'utilisateur est tenu de faire corriger rapidement par un électricien qualifié les interférences résultant de l'installation.
- Si le FCC signale des interférences, arrêter immédiatement l'appareil.
- Effectuer régulièrement le contrôle et l'entretien de l'installation.
- Maintenir soigneusement fermés les portes et les panneaux des sources de haute fréquence, maintenir les éclateurs à une distance correcte et utiliser une terre et un blindage pour réduire les interférences éventuelles.

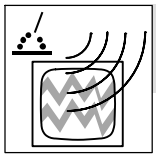

LE SOUDAGE À L'ARC risque de provoquer des interférences.

- L'énergie électromagnétique risque de provoquer des interférences pour l'équipement électronique sensible tel que les ordinateurs et l'équipement commandé par ordinateur tel que les robots.
- Veiller à ce que tout l'équipement de la zone de soudage soit compatible électromagnétiquement.
- Pour réduire la possibilité d'interférence, maintenir les câbles de soudage aussi courts que possible, les grouper, et les poser aussi bas que possible (ex. par terre).
- Veiller à souder à une distance de 100 mètres de tout équipement électronique sensible.
- Veiller à ce que ce poste de soudage soit posé et mis à la terre conformément à ce mode d'emploi.
- En cas d'interférences après avoir pris les mesures précédentes, il incombe à l'utilisateur de prendre des mesures supplémentaires telles que le déplacement du poste, l'utilisation de câbles blindés, l'utilisation de filtres de ligne ou la pose de protecteurs dans la zone de travail.

2-4. Proposition californienne 65 Avertissements

AVERTISSEMENT : ce produit peut vous exposer à des produits chimiques tels que le plomb, reconnus par l'État de Californie comme cancérigènes et sources de malformations ou d'autres troubles de la reproduction.

Pour plus d'informations, consulter www.P65Warnings.ca.gov.

2-5. Principales normes de sécurité

Safety in Welding, Cutting, and Allied Processes, American Welding Society standard ANSI Standard Z49.1. Website: www.aws.org.

Safe Practice For Occupational And Educational Eye And Face Protection, ANSI Standard Z87.1 from American National Standards Institute. Website: www.ansi.org.

Safe Practices for the Preparation of Containers and Piping for Welding and Cutting, American Welding Society Standard AWS F4.1 from Global Engineering Documents. Website: www.global.ihs.com.

Safe Practices for Welding and Cutting Containers that have Held Combustibles, American Welding Society Standard AWS A6.0 from Global Engineering Documents. Website: www.global.ihs.com.

National Electrical Code, NFPA Standard 70 from National Fire Protection Association. Website: www.nfpa.org and www. sparky.org.

Safe Handling of Compressed Gases in Cylinders, CGA Pamphlet P-1 from Compressed Gas Association. Website:www.cganet.com.

Safety in Welding, Cutting, and Allied Processes, CSA Standard W117.2 from Canadian Standards Association. Website: www.csagroup.org.

Standard for Fire Prevention During Welding, Cutting, and Other Hot Work, NFPA Standard 51B from National Fire Protection Association. Website: www.nfpa.org.

OSHA *Occupational Safety and Health Standards for General Industry*, Title 29, Code of Federal Regulations (CFR), Part 1910.177 Subpart N, Part 1910 Subpart Q, and Part 1926, Subpart J. Website: www.osha.gov.

OSHA *Important Note Regarding the ACGIH TLV, Policy Statement on the Uses of TLVs and BEIs.* Website: www.osha.gov.

Applications Manual for the Revised NIOSH Lifting Equation from the National Institute for Occupational Safety and Health (NIOSH). Website: www.cdc.gov/NIOSH.

2-6. Informations relatives aux CEM

Le courant électrique qui traverse tout conducteur génère des champs électromagnétiques (CEM) à certains endroits. Le courant issu d'un soudage à l'arc (et de procédés connexes, y compris le soudage par points, le gougeage, le découpage plasma et les opérations de chauffage par induction) crée un champ électromagnétique (CEM) autour du circuit de soudage. Les champs électromagnétiques produits peuvent causer interférence à certains implants médicaux, p. ex. les stimulateurs cardiaques. Des mesures de protection pour les porteurs d'implants médicaux doivent être prises: Limiter par exemple tout accès aux passants ou procéder à une évaluation des risques individuels pour les soudeurs. Tous les soudeurs doivent appliquer les procédures suivantes pour minimiser l'exposition aux CEM provenant du circuit de soudage:

1. Rassembler les câbles en les torsadant ou en les attachant avec du ruban adhésif ou avec une housse.
2. Ne pas se tenir au milieu des câbles de soudage. Disposer les câbles d'un côté et à distance de l'opérateur.
3. Ne pas courber et ne pas entourer les câbles autour de votre corps.
4. Maintenir la tête et le torse aussi loin que possible du matériel du circuit de soudage.
5. Connecter la pince sur la pièce aussi près que possible de la soudure.
6. Ne pas travailler à proximité d'une source de soudage, ni s'asseoir ou se pencher dessus.
7. Ne pas souder tout en portant la source de soudage ou le dévidoir.

En ce qui concerne les implants médicaux :
Les porteurs d'implants doivent d'abord consulter leur médecin avant de s'approcher des opérations de soudage à l'arc, de soudage par points, de gougeage, du coupage plasma ou de chauffage par induction. Si le médecin approuve, il est recommandé de suivre les procédures précédentes.

SECTION 3 – DEFINITIONS

3-1. Additional Safety Symbols And Definitions

	Warning! Watch Out! There are possible hazards as shown by the symbols. Safe1 2012–05
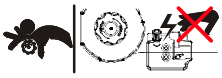	Drive rolls can injure fingers. Welding wire and drive parts are at welding voltage during operation – keep hands and metal objects away. Safe95 2012–05
	Beware of electric shock from wiring. Safe94 2012–08
	When power is applied failed parts can explode or cause other parts to explode. Safe26 2012–05
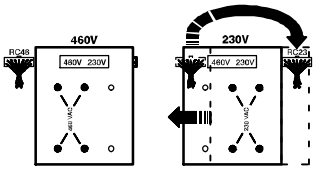	Move relinking board as shown on inside label to match input voltage at job site. Double-check all connections, relinking board position, and input voltage before applying power. Safe96 2012–06
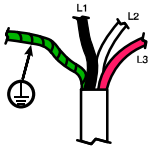	For single phase operation, insulate and isolate red conductor. Include extra length in grounding conductor and connect grounding conductor first. Connect black, white, and red wires (L1, L2, L3) to line terminals. Safe97 2012–05
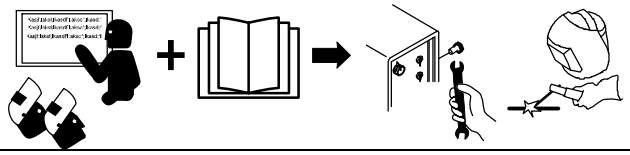	Become trained and read the instructions before working on the machine or welding. Safe40 2012–05
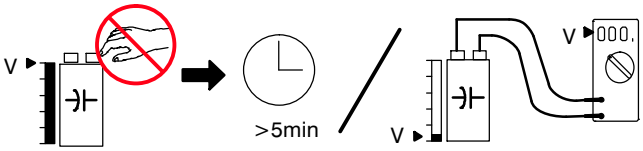	Hazardous voltage remains on input capacitors after power is turned off. Do not touch fully charged capacitors. Always wait 5 minutes after power is turned off before working on unit, OR check input capacitor voltage, and be sure it is near 0 before touching any parts. Safe43 2017–04

3-2. Miscellaneous Symbols And Definitions

A	Amperage
⎓	Direct Current (DC)
∿	Alternating Current (AC)
V	Voltage
	Output
	Cold Jog (Inch) Toward Workpiece
	Remote
I	On
O	Off
+	Positive

—	Negative
V	Voltage Input
	Arc Control
	Constant Voltage
	Purge By Gas
	Protective Earth (Ground)
	Increase
	Line Connection
	Gas Metal Arc Welding (GMAW)
	Three Phase Static Frequency Converter-Transformer-Rectifier

U_0	Rated No Load Voltage (OCV)
U_1	Primary Voltage
	Press
X	Duty Cycle
Hz	Hertz
	Gun Control
	Pulsed
1∿	Single Phase
3∿	Three Phase
I_{1max}	Rated Maximum Supply Current

Notes

SECTION 4 – SPECIFICATIONS

4-1. Serial Number And Rating Label Location

The serial number and rating information for this product is located on back. Use rating label to determine input power requirements and/or rated output. For future reference, write serial number in space provided on back cover of this manual.

4-2. Software Licensing Agreement

The End User License Agreement and any third-party notices and terms and conditions pertaining to third-party software can be found at https://www.millerwelds.com/eula and are incorporated by reference herein.

4-3. Information About Default Weld Parameters And Settings

NOTICE *– Each welding application is unique. Although certain Miller Electric products are designed to determine and default to certain typical welding parameters and settings based upon specific and relatively limited application variables input by the end user, such default settings are for reference purposes only; and final weld results can be affected by other variables and application-specific circumstances. The appropriateness of all parameters and settings should be evaluated and modified by the end user as necessary based upon application-specific requirements. The end user is solely responsible for selection and coordination of appropriate equipment, adoption or adjustment of default weld parameters and settings, and ultimate quality and durability of all resultant welds. Miller Electric expressly disclaims any and all implied warranties including any implied warranty of fitness for a particular purpose.*

4-4. Unit Specifications

Rated Output		Max. Open Circuit Voltage	60 Hz	Amps Input at Rated Output					
				200 V	230 V	460 V	575V	KVA	KW
300 A at 32 VDC, 60% Duty Cycle	350 A at 32 VDC, 40% Duty Cycle	90	Single-Phase	69 (1.7*)	61 (1.5*)	30 (0.75*)	24 (0.5*)	13.1	11.2
			Three-Phase	34 (1.7*)	30 (1.5*)	15 (0.75*)	12 (0.5*)	11.6	11.5
* While idling									

Wire Type and Diameter			Wire Feed Speed	Dimensions	Net Weight
Solid Steel	**Stainless Steel**	**Aluminum**	50–700 IPM (1.3–17.8 m/min)	H: 34 in. (864 mm) W: 19 in. (483 mm) D: 41 in. (1041 mm)	181 lb (82 kg)
.023 – .045 in. (0.8 – 1.1 mm)	.030 – .045 in. (0.8 – 1.1 mm)	.035 – .047 in. (0.9 – 1.2 mm)			
Operating Temperature Range: –20C to +40C			Storage Temperature Range: -30C to + 50C		

4-5. Duty Cycle And Overheating

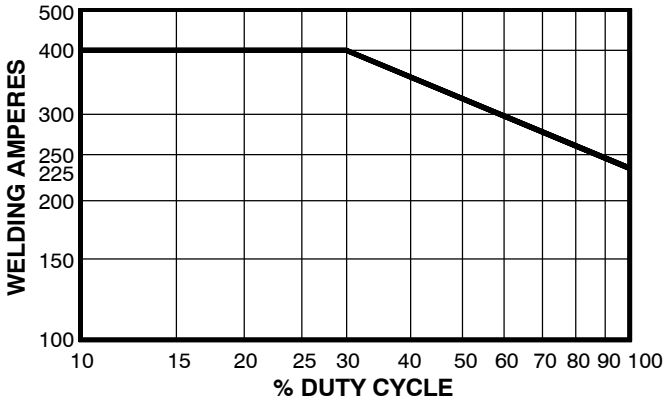

Duty Cycle is percentage of 10 minutes that unit can weld at rated load without overheating.

If unit overheats, thermistors open, output stops, and cooling fan runs. Wait fifteen minutes for unit to cool. Reduce amperage or voltage, or duty cycle before welding.

NOTICE *– Exceeding duty cycle can damage unit and void warranty.*

60% Duty Cycle At 300 Amperes

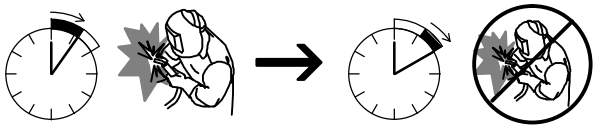

6 Minutes Welding — 4 Minutes Resting

40% Duty Cycle At 350 Amperes

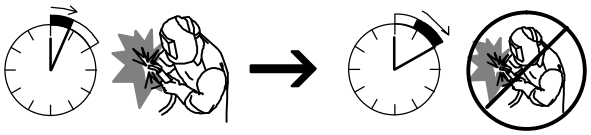

4 Minutes Welding — 6 Minutes Resting

Overheating

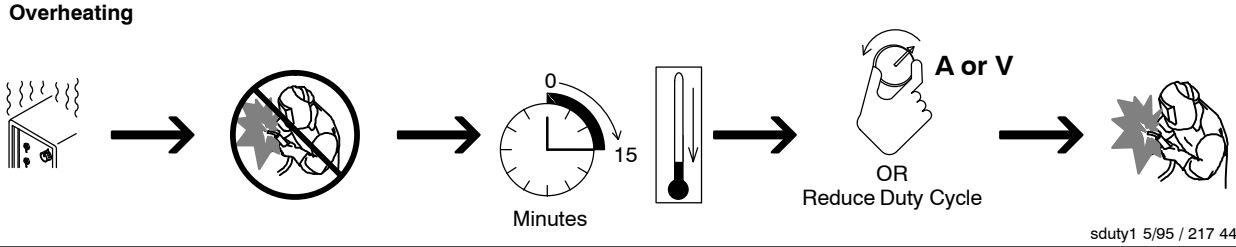

sduty1 5/95 / 217 442-A

4-6. Volt-Ampere Curve

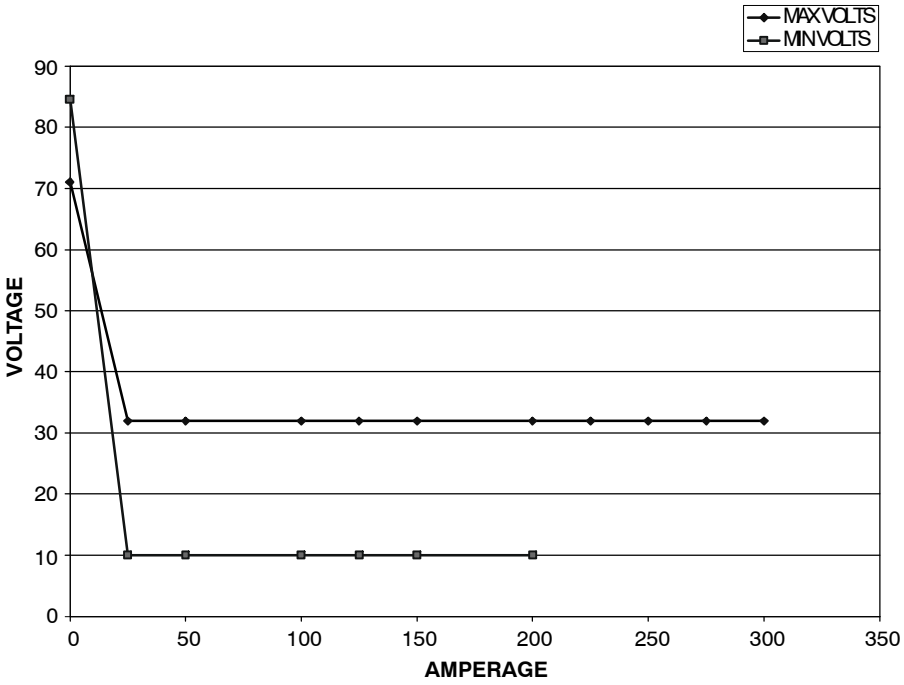

1 Normal Volt-Ampere Curves

The volt-ampere curves show the normal minimum and maximum voltage and amperage output capabilities of the welding power source. Curves of other settings fall between the curves shown.

217 443-A

SECTION 5 – INSTALLATION

5-1. Selecting A Location

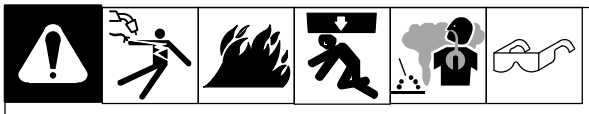

Movement

Do not move or operate unit where it could tip.

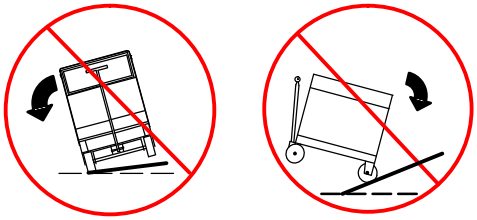

Location And Airflow

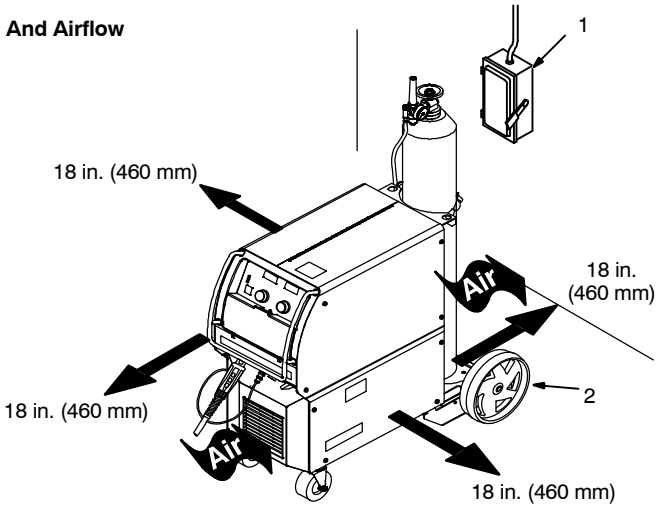

Special installation may be required where gasoline or volatile liquids are present – see NEC Article 511 or CEC Section 20.

1 Line Disconnect Device

2 Running Gear

Locate unit near correct input power supply.

loc_cart mount 2015-08

Notes

5-2. Weld Output Terminals And Selecting Cable Sizes

NOTICE *– The Total Cable Length in Weld Circuit (see table below) is the combined length of both weld cables. For example, if the power source is 100 ft (30 m) from the workpiece, the total cable length in the weld circuit is 200 ft (2 cables x 100 ft). Use the 200 ft (60 m) column to determine cable size.*

Weld Output Terminals

Turn off power before connecting to weld output terminals.

Do not use worn, damaged, under-sized, or poorly spliced cables.

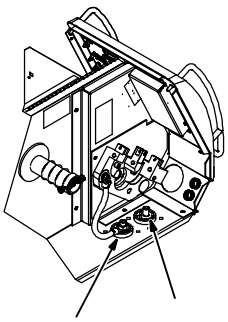

Ref. 803 912-B

Welding Amperes	Weld Cable Size** and Total Cable (Copper) Length in Weld Circuit Not Exceeding***							
	100 ft (30 m) or Less		150 ft (45 m)	200 ft (60 m)	250 ft (70 m)	300 ft (90 m)	350 ft (105 m)	400 ft (120 m)
	10 – 60% Duty Cycle AWG (mm^2)	60 – 100% Duty Cycle AWG (mm^2)	10 – 100% Duty Cycle AWG (mm^2)					
100	4 (20)	4 (20)	4 (20)	3 (30)	2 (35)	1 (50)	1/0 (60)	1/0 (60)
150	3 (30)	3 (30)	2 (35)	1 (50)	1/0 (60)	2/0 (70)	3/0 (95)	3/0 (95)
200	3 (30)	2 (35)	1 (50)	1/0 (60)	2/0 (70)	3/0 (95)	4/0 (120)	4/0 (120)
250	2 (35)	1 (50)	1/0 (60)	2/0 (70)	3/0 (95)	4/0 (120)	2 ea. 2/0 (2x70)	2 ea. 2/0 (2x70)
300	1 (50)	1/0 (60)	2/0 (70)	3/0 (95)	4/0 (120)	2 ea. 2/0 (2x70)	2 ea. 3/0 (2x95)	2 ea. 3/0 (2x95)
350	1/0 (60)	2/0 (70)	3/0 (95)	4/0 (120)	2 ea. 2/0 (2x70)	2 ea. 3/0 (2x95)	2 ea. 3/0 (2x95)	2 ea. 4/0 (2x120)
400	1/0 (60)	2/0 (70)	3/0 (95)	4/0 (120)	2 ea. 2/0 (2x70)	2 ea. 3/0 (2x95)	2 ea. 4/0 (2x120)	2 ea. 4/0 (2x120)
500	2/0 (70)	3/0 (95)	4/0 (120)	2 ea. 2/0 (2x70)	2 ea. 3/0 (2x95)	2 ea. 4/0 (2x120)	3 ea. 3/0 (3x95)	3 ea. 3/0 (3x95)

* This chart is a general guideline and may not suit all applications. If cable overheats, use next size larger cable.

**Weld cable size (AWG) is based on either a 4 volts or less drop or a current density of at least 300 circular mils per ampere.
( ) = mm^2 for metric use

***For distances longer than those shown in this guide, see AWS Fact Sheet No. 39, Welding Cables, available from the American Welding Society at http://www.aws.org.

Ref. S-0007-M 2017–08

5-3. Connecting To Weld Output Terminals

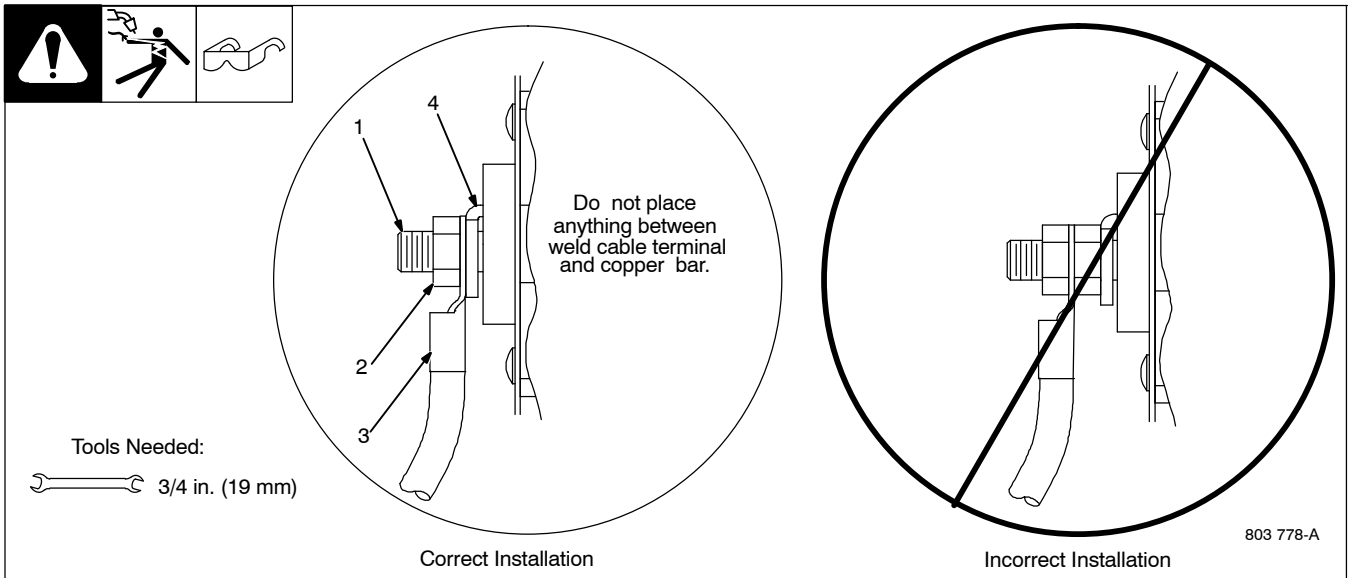

Turn off power before connecting to weld output terminals.

Failure to properly connect weld cables may cause excessive heat and start a fire, or damage your machine.

1 Weld Output Terminal
2 Supplied Weld Output Terminal Nut
3 Weld Cable Terminal
4 Copper Bar

Remove supplied nut from weld output terminal. Slide weld cable terminal onto weld output terminal and secure with nut so that weld cable terminal is tight against copper bar. **Do not place anything between weld cable terminal and copper bar. Make sure that the surfaces of the weld cable terminal and copper bar are clean.**

Notes

5-4. Installing Work Clamp

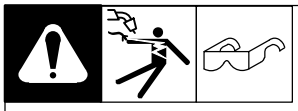

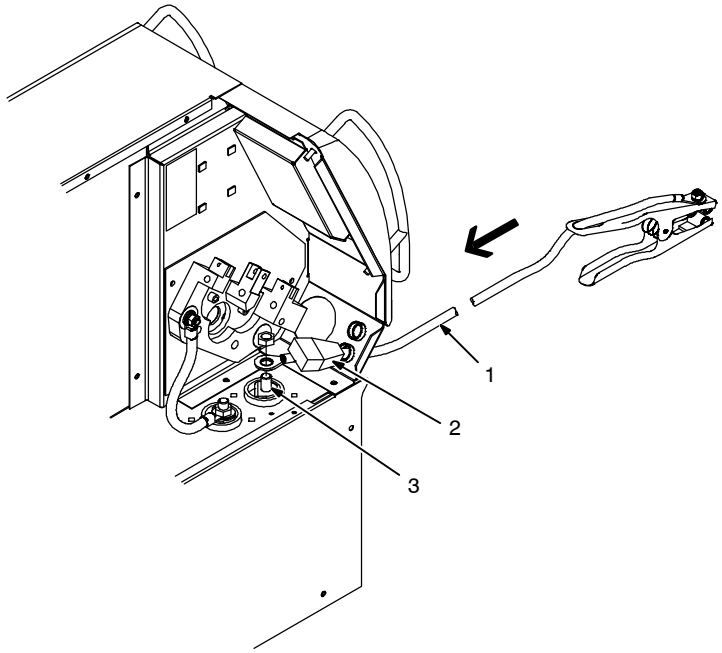

1 Work Cable

2 Boot

Route cable through front panel opening. Slide boot onto work cable.

3 Negative (–) Output Terminal

Connect cable to terminal and cover connection with boot.

Close door.

Tools Needed:

3/4 in.

803 540-D

5-5. Installing Welding Gun/Cable Holder

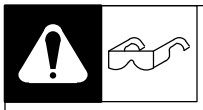

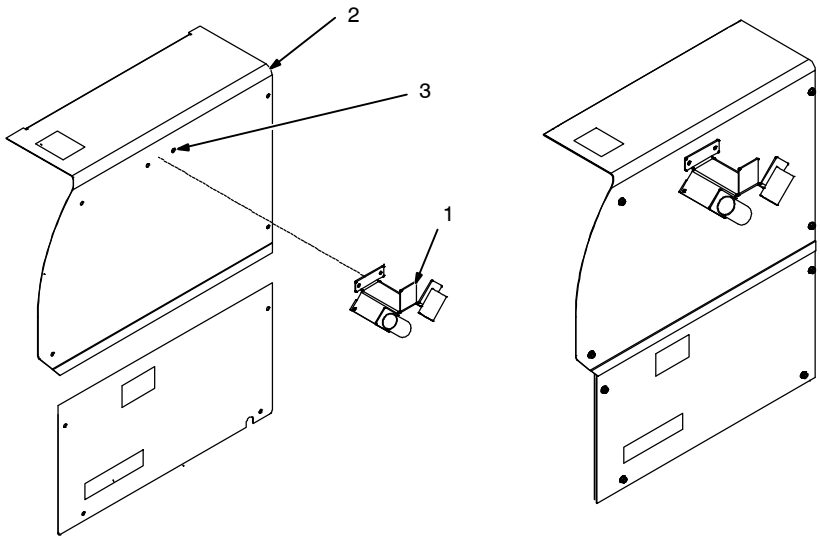

1 Welding Gun/Cable Holder

2 Wrapper

3 Screw Locations

Remove screws from side panel. Place holder against side panel and align screw holes. Secure holder to side panel with the previously removed screws.

Ref. 803 545-D / Ref. 803 539-C

5-6. Installing Welding Gun

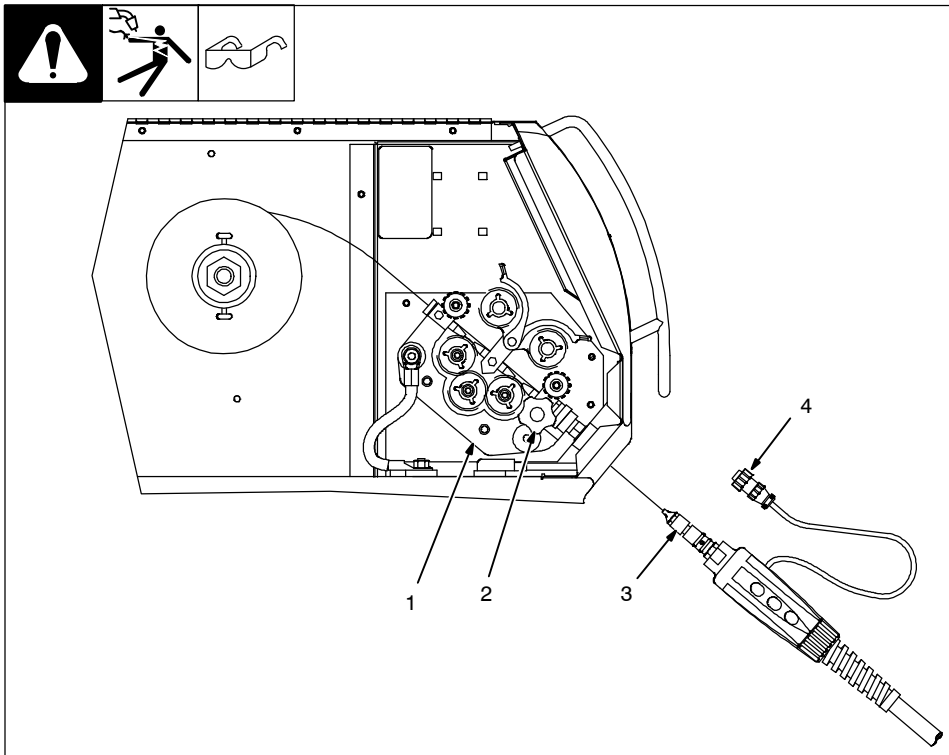

1 Drive Assembly

2 Gun Securing Knob

3 Gun End

Loosen securing knob. Insert gun end through opening until it bottoms against drive assembly (make sure gun end does not touch drive rolls). Tighten knob.

4 Gun Trigger Plug

Insert plug into receptacle, and tighten threaded collar.

Close door.

Ref. 803 544-C / Ref. 803 541-C

Notes

5-7. Connecting Spoolmatic® 15A Or 30A Gun

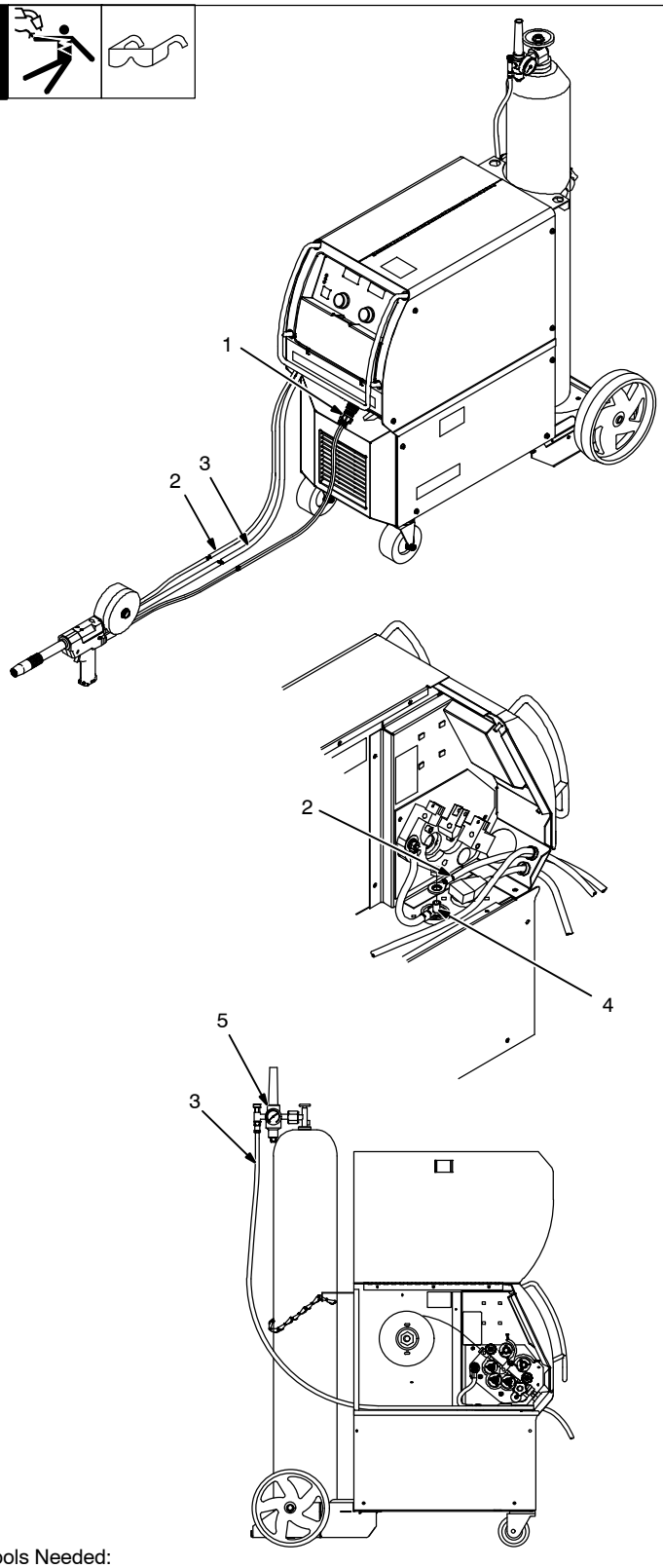

1 Gun Trigger Plug

Insert plug into receptacle, and tighten threaded collar.

2 Weld Cable

3 Shielding Gas Hose

Route weld cable and gas hose through opening in front panel.

4 Positive Weld Output Terminal

Connect weld cable to weld output terminal.

5 Regulator/Flowmeter

Route shielding gas hose through wire drive compartment, out opening in rear panel, and up to regulator/flowmeter. Connect gas hose to regulator/flowmeter.

Tools Needed:

3/4, 5/8 in.

Ref.803 568-D / Ref. 803 540-D / Ref. 803 544-C

5-8. Connecting XR Edge, XR-A Gun, XR-A Python, Or XR - Aluma-Pro

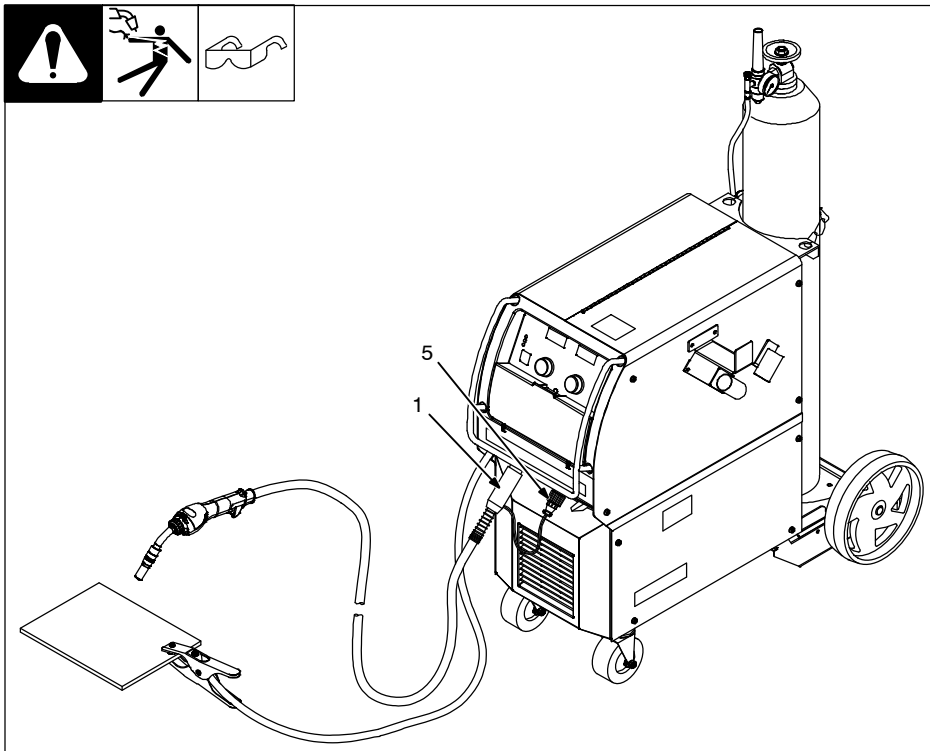

XR Edge guns prior to serial no. LE079101 require an adapter cord (part no. 195 498).

1 Gun End

2 Gun Liner

3 Wire Outlet Guide

Trim excess liner from end of gun so no more than 3/32 in. (2.4 mm) of liner extends past wire outlet guide.

4 Gun Securing Knob

Loosen securing knob. Insert gun end through opening until it bottoms against drive assembly (make sure gun end does not touch drive rolls). Tighten knob.

Be sure to change drive rolls to the proper size and type.

5 Gun Trigger Plug

Insert plug into receptacle, and tighten threaded collar.

Be sure to trim liner to proper extension.

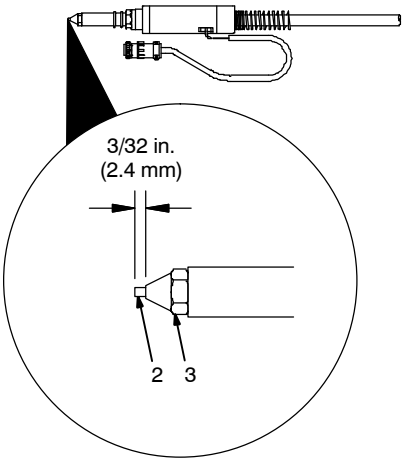

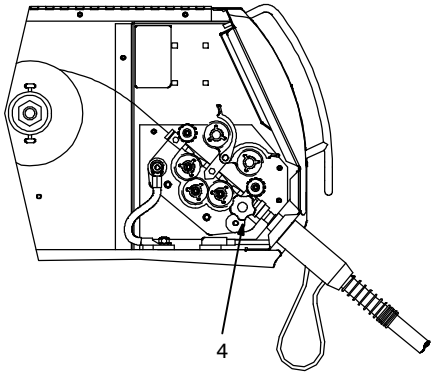

803 569-C / Ref. 803 570 -C / Ref. 803 540-D / Ref. 803 463

5-9. Setting Gun Polarity For Wire Type

Changing Polarity

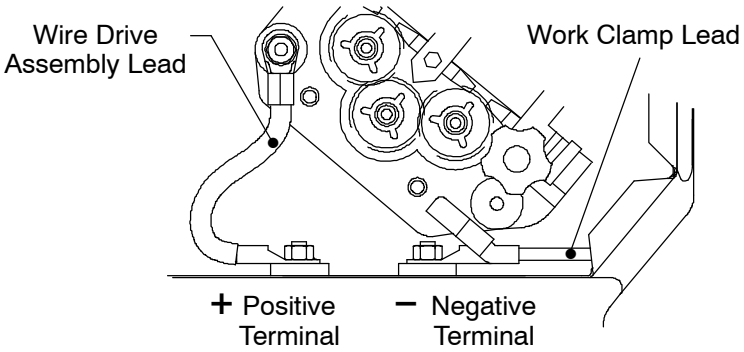

Shown as shipped – **Electrode Positive** (DCEP): For solid steel, stainless steel, aluminum, or flux core with gas wires (GMAW).

Electrode Negative (DCEN): Reverse lead connections at terminals from that shown above for gasless flux core wires (FCAW). Drive assembly becomes negative.

1 Polarity Changeover Information

Always read and follow manufacture's recommended polarity.

1

3/4, 11/16 in.

Ref. 803 541-A

Notes

5-10. Installing Gas Supply

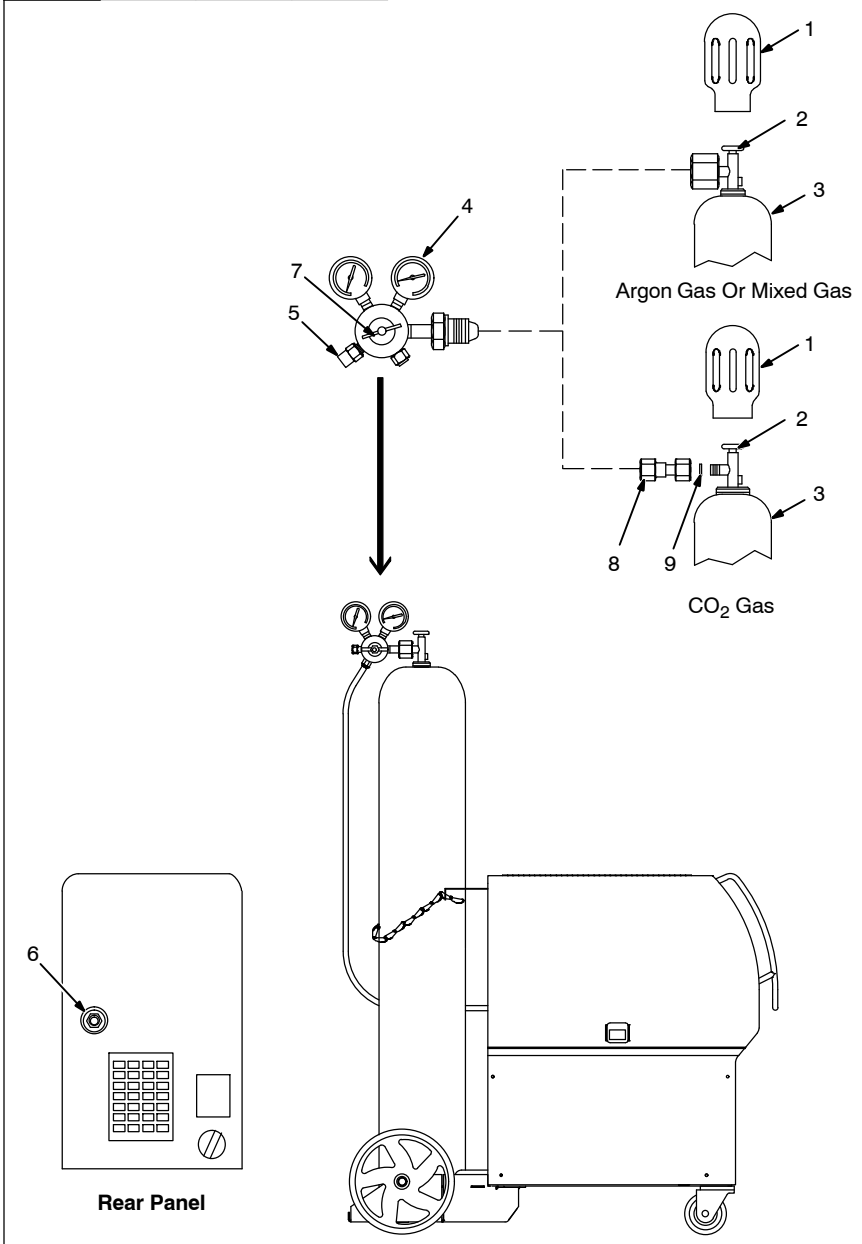

Tools Needed:

1-1/8, 5/8 in.

Obtain gas cylinder and chain to running gear, wall, or other stationary support so cylinder cannot fall and break off valve.

1 Cap

2 Cylinder Valve

Remove cap, stand to side of valve, and open valve slightly. Gas flow blows dust and dirt from valve. Close valve.

3 Cylinder

4 Regulator/Flowmeter

Install so face is vertical.

5 Regulator/Flowmeter Gas Hose Connection

6 Welding Power Source Gas Hose Connection

Connect supplied gas hose between regulator/flowmeter gas hose connection, and fitting on rear of welding power source.

7 Flow Adjust

Typical flow rate is 20 cfh (cubic feet per hour). Check wire manufacturer's recommended flow rate.

8 CO_2 Adapter (Customer Supplied)

9 O-Ring (Customer Supplied)

Install adapter with O-ring between regulator/flowmeter and CO_2 cylinder.

803 542-C

5-11. Installing Wire Spool And Adjusting Hub Tension

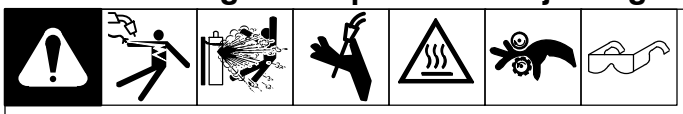

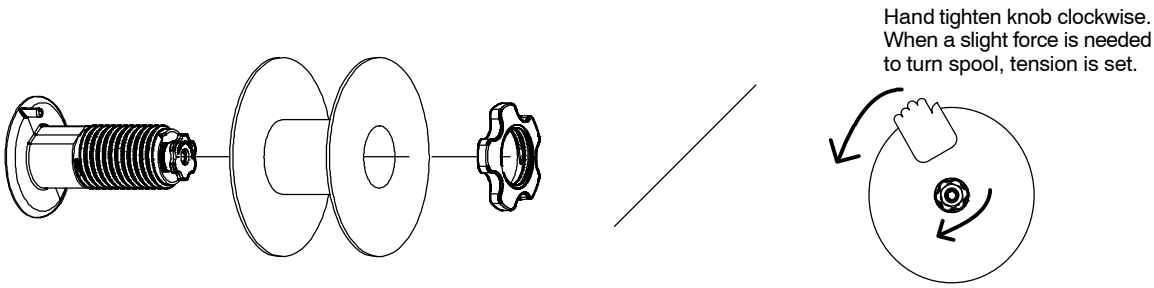

Installing 1 Or 2 lb Wire Spool

To install either a 1 lb or 2 lb wire spool, follow the procedure as shown in the illustration.

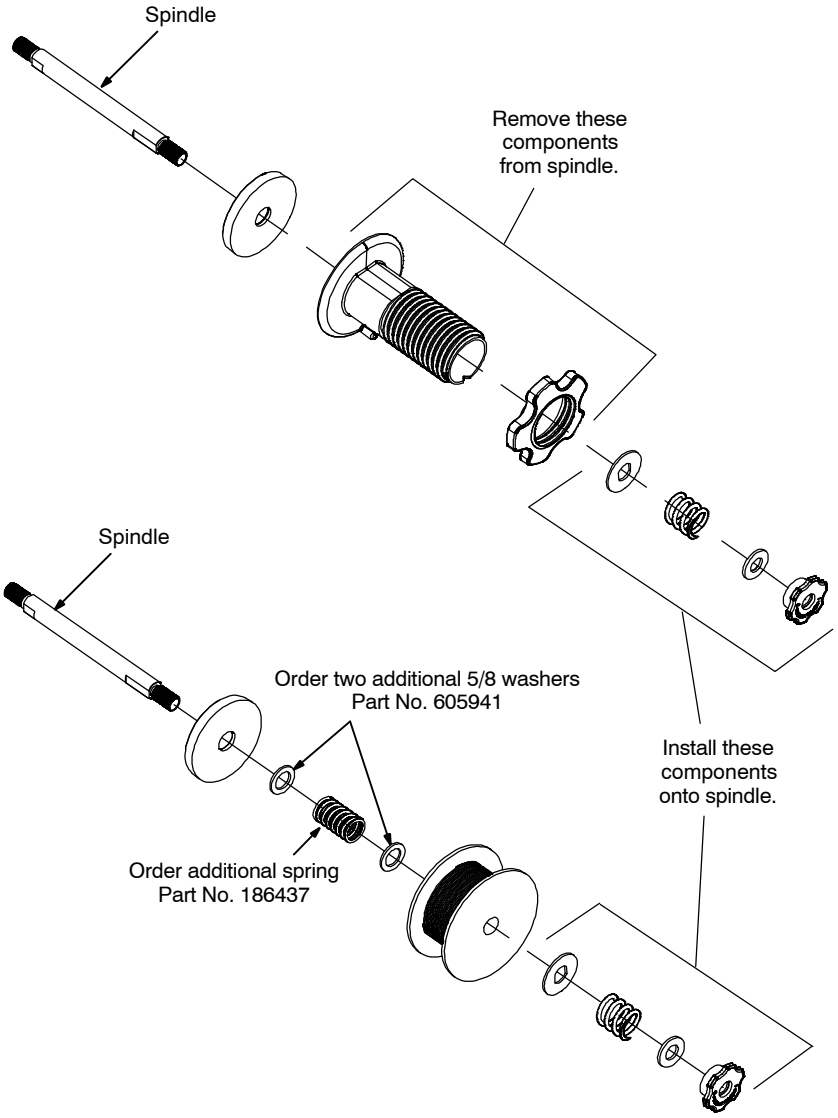

282945A

5-12. Electrical Service Guide

NOTICE *– INCORRECT INPUT POWER can damage this welding power source. This welding power source requires a CONTINUOUS supply of input power at rated frequency (±10%) and voltage (±10%). Phase to ground voltage shall not exceed +10% of rated input voltage. Do not use a generator with automatic idle device (that idles engine when no load is sensed) to supply input power to this welding power source.*

NOTICE *– Actual input voltage should not be 10% less than minimum and/or 10% more than maximum input voltages listed in table. If actual input voltage is outside this range, output may not be be available.*

Failure to follow these electrical service guide recommendations could create an electric shock or fire hazard. These recommendations are for an individual branch circuit sized for the rated output and duty cycle of one welding power source.

In individual branch circuit installations, the National Electrical Code (NEC) allows the receptacle or conductor rating to be less than the rating of the circuit protection device. All components of the circuit must be physically compatible. See NEC articles 210.21, 630.11, and 630.12.

	60 Hz 1-Phase				60 Hz 3-Phase			
Rated Supply Voltage (V)	200	230	460	575	200	230	460	575
Rated Maximum Supply Current I_{1max} (A)	69.0	61.0	30.0	24.0	34.0	30.0	15.0	12.0
Maximum Effective Supply Current I_{1eff} (A)	53.4	47.3	23.2	18.6	26.3	23.2	11.6	9.3
Maximum Recommended Standard Fuse Rating In Amperes [1]								
Time-Delay Fuses [2]	80	70	35	30	40	35	15	15
Normal Operating Fuses [3]	100	90	45	35	50	45	20	15
Maximum Recommended Supply Conductor Length In Feet (Meters) [4]	96 (29)	81 (25)	217 (66)	206 (63)	85 (26)	111 (34)	172 (53)	269 (82)
Raceway Installation								
Minimum Supply Conductor Size In AWG (mm^2) [5]	6 (16)	8 (10)	10 (6)	12 (4)	10 (6)	10 (6)	14 (2.5)	14 (2.5)
Minimum Grounding Conductor Size In AWG (mm^2) [5]	8 (10)	8 (10)	10 (6)	12 (4)	10 (6)	10 (6)	14 (2.5)	14 (2.5)
Flexible Cord Installation								
Minimum Supply Conductor Size In AWG (mm^2) [6]	6 (16)	6 (16)	12 (4)	12 (4)	8 (10)	10 (6)	14 (2.5)	14 (2.5)
Recommended Strain Relief [7]	See Parts List	See Parts List	See Parts List	See Parts List	See Parts List	See Parts List	See Parts List	See Parts List

Reference: 2020 National Electrical Code (NEC) (including article 630)

1 If a circuit breaker is used in place of a fuse, choose a circuit breaker with time-current curves comparable to the recommended fuse.

2 “Time-Delay” fuses are UL class “RK5” . See UL 248.

3 “Normal Operating” (general purpose - no intentional delay) fuses are UL class “K5” (up to and including 60 amps), and UL class “H” (65 amps and above).

4 Maximum total length of copper input conductors in entire installation, raceway and/or flexible cord.

5 Raceway conductor data in this section specifies conductor size (excluding flexible cord or cable) between the panelboard and the equipment per NEC Table 310.15(B)(16) and is based on allowable ampacities of insulated copper conductors having a temperature rating of 75°C (167°F) with not more than three single current–carrying conductors in a raceway.

6 Flexible cord conductor size is based on NEC Table 400.5(A)(1) for SOOW 600V 90°C (194°F) jacketed cable in a 30°C (86°F) ambient temperature. See NEC Table 310.15(B)(2)(a) for ambient temperature correction factors. Flexible cord used for connection to the power supply system shall comply with the requirements of CSA C22.2 No. 49.

7 If necessary, have a qualified person enlarge access hole in machine panel to accommodate strain relief.

5-13. Selecting Input Voltage (200/230/460 Volt Models Only)

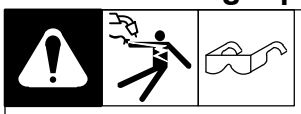

Be sure to reinstall all four screws securing relinking board in place.

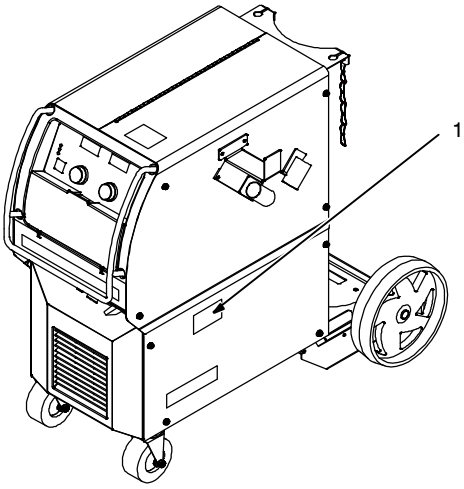

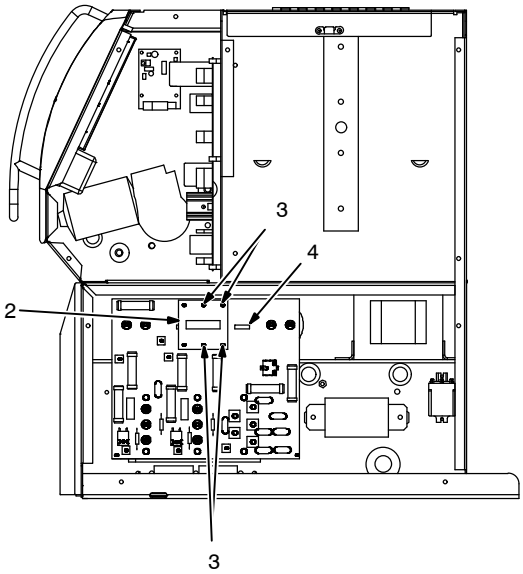

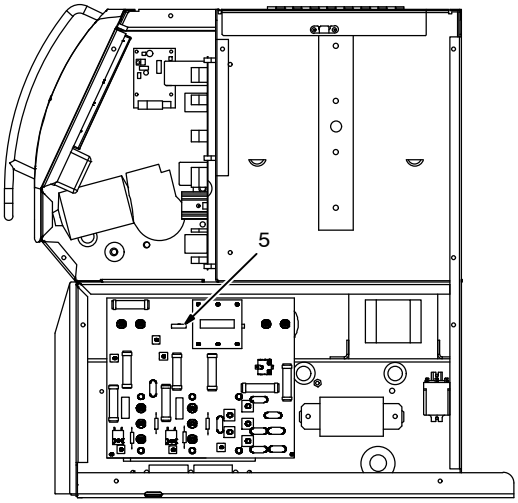

Turn Off welding power source, disconnect input power, and check voltage on input capacitors according to Section 8-3 before proceeding.

Check input voltage available at site.

Incorrect linking can damage unit and void the warranty.

1 Voltage Selection View Window

Check voltage selected in unit. Changing selection is only necessary if selected value does not match available input voltage.

2 Relinking Board PC6

3 Mounting Screws

4 Receptacle RC23 (Connection For 230 VAC Or 208 VAC Input Power)

5 Receptacle RC46 (Connection For 460 VAC Input Power)

Move relinking board as needed and connect plug PLG32 (in unit) to RC23 or RC46 according to input power voltage.

Tools Needed:

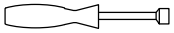

5/16 in.

803 539-C / 804 042-A

5-14. Connecting 3-Phase Input Power

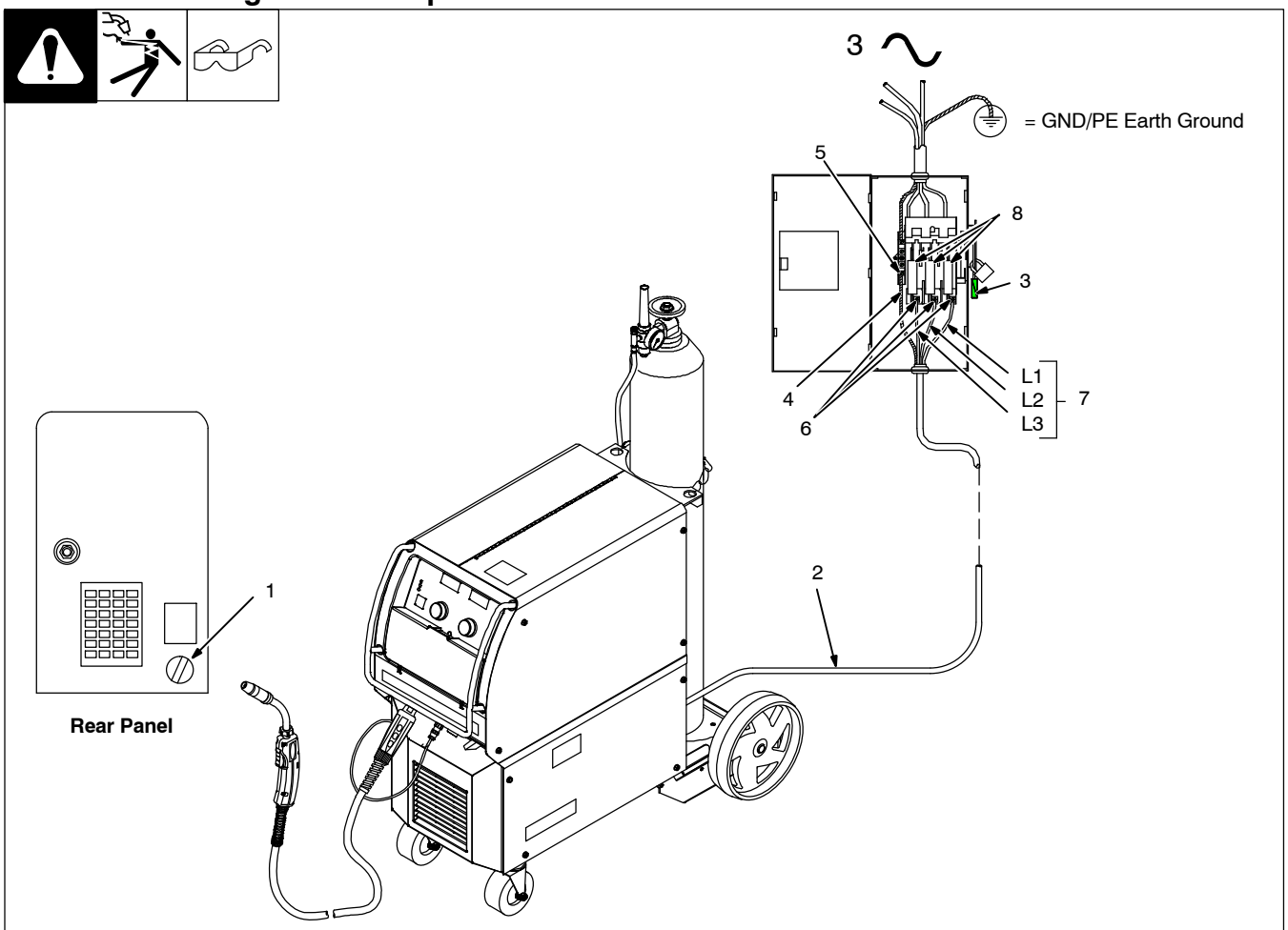

Tools Needed:

Ref. 803 543-E / 803 766-A

Installation must meet all National and Local Codes - have only qualified persons make this installation.

Disconnect and lockout/tagout input power before connecting input conductors from unit.

Always connect green or green/yellow conductor to supply grounding terminal first, and never to a line terminal.

Warning: This unit is either a 200/230/460 ac input voltage model or 460/575 ac input voltage model. See rating label on unit and check voltage available at site to be sure it matches the voltage specified on the rating label.

1 Input Power Cord Strain Relief
2 Input Power Cord
3 Disconnect Device (switch shown in the OFF position)
4 Green Or Green/Yellow Grounding Conductor
5 Disconnect Device Grounding Terminal
6 Input Conductors (L1, L2 And L3)
7 Disconnect Device Line Terminals

Connect green or green/yellow grounding conductor to disconnect device grounding terminal first.

Connect input conductors L1, L2, and L3 to disconnect device line terminals.

8 Over-Current Protection

Select type and size of over-current protection using Section 5-12 (fused disconnect switch shown).

Close and secure door on disconnect device. Remove lockout/tagout device, and place switch in the On position.

5-15. Connecting 1-Phase Input Power

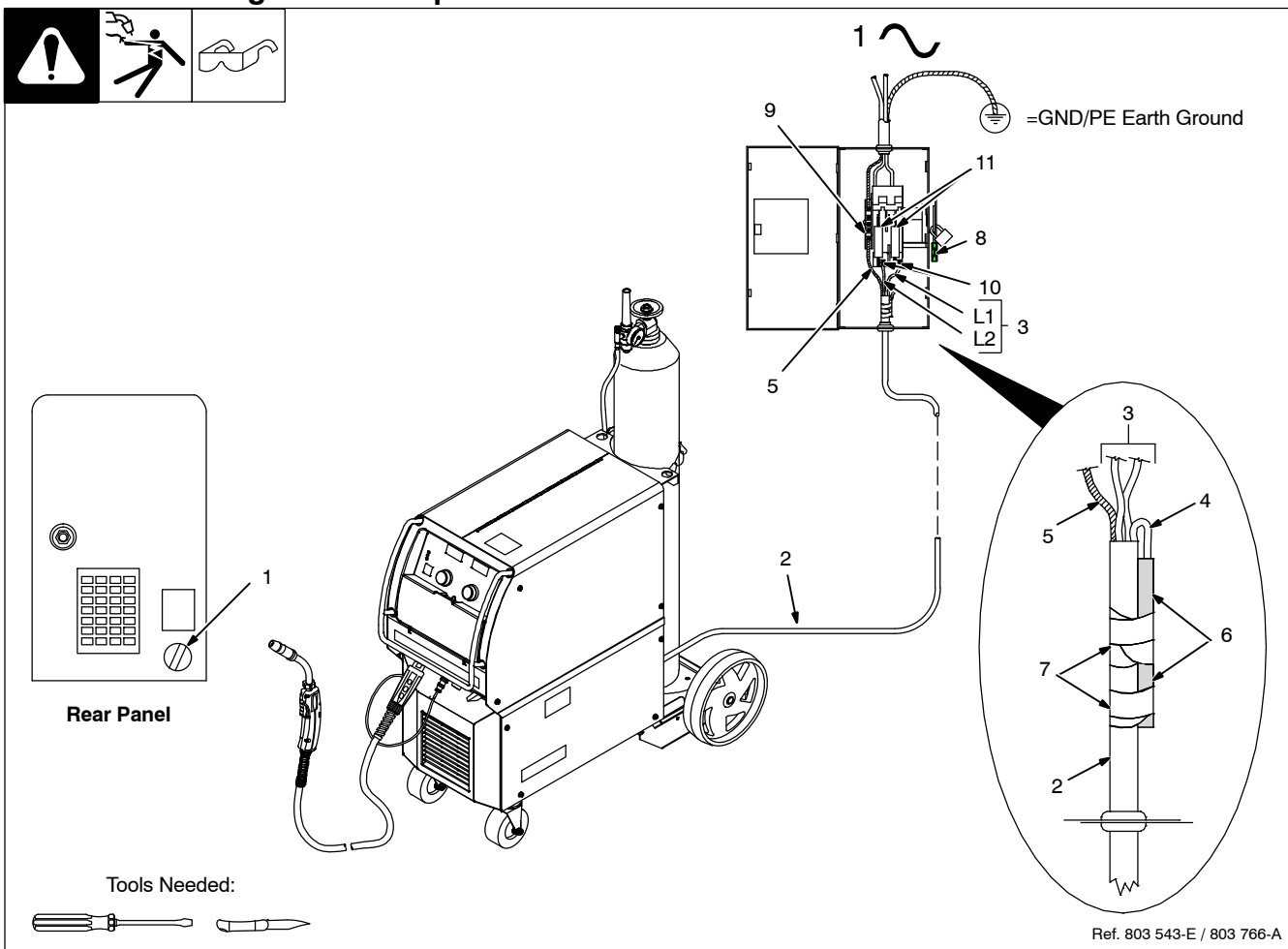

Installation must meet all National and Local Codes - have only qualified persons make this installation.

Disconnect and lockout/tagout input power before connecting input conductors form unit.

Always connect green or green/yellow conductor to supply grounding terminal first, and never to a line terminal.

Warning: This unit is either a 200/230/460 ac input voltage model or 460/575 ac input voltage model. See rating label on unit and check voltage available at site to be sure it matches the voltage specified on the rating label.

Three Conductor Power Cord Preparation

1 Input Power Cord Strain Relief

2 Input Power Cord

3 Black And White Input Conductors (L1 And L2)

4 Red Input Conductor

5 Green Or Green/Yellow Grounding Conductor

6 Insulation Sleeving

7 Electrical Tape

Insulate and isolate red conductor as shown.

Disconnect Device Input Power Connections

8 Disconnect Device (switch shown in the OFF position)

9 Disconnect Device Grounding Terminal

10 Disconnect Device Line Terminals

Connect green or green/yellow grounding conductor (see Item 5) to disconnect device grounding terminal first.

Connect input conductors L1 and L2 to disconnect device line terminals.

11 Over-Current Protection

Select type and size of over-current protection using Section 5-12 (fused disconnect switch shown).

Close and secure door on disconnect device. Remove lockout/tagout device, and place switch in the On position.

5-16. Threading Welding Wire For MIG Gun

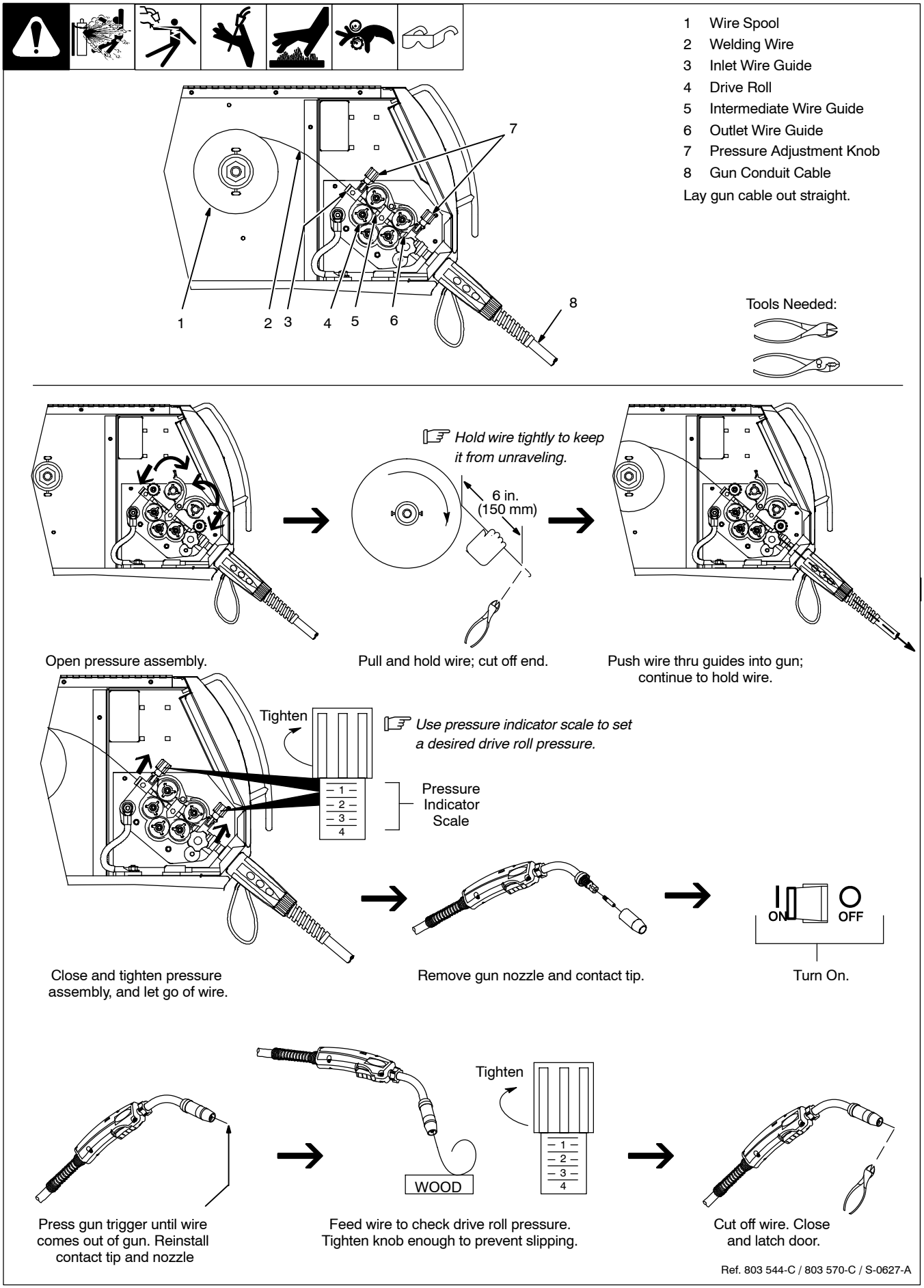

5-17. Threading Welding Wire For XR Edge, XR-A Gun, XR-A Python, Or XR - Aluma-Pro

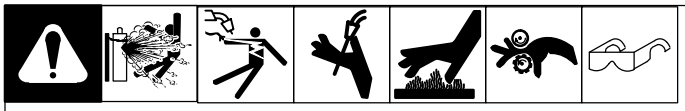

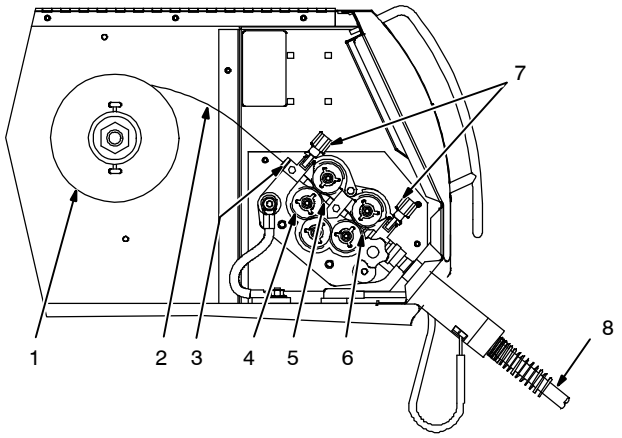

1 Wire Spool
2 Welding Wire
3 Inlet Wire Guide
4 Drive Roll
5 Intermediate Wire Guide
6 Outlet Wire Guide
7 Pressure Adjustment Knob
8 Gun Conduit Cable

Lay gun cable out straight.

Tools Needed:

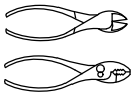

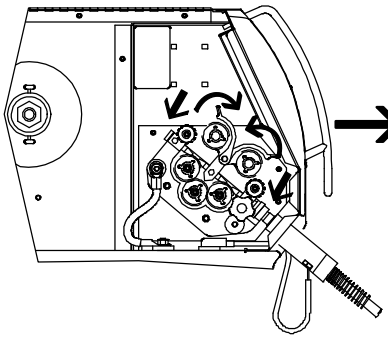

Open pressure assembly.

Hold wire tightly to keep it from unraveling.

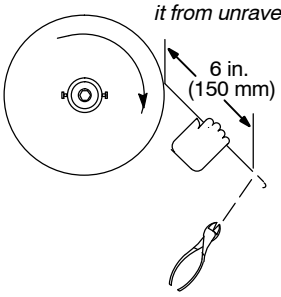

Pull and hold wire; cut off end.

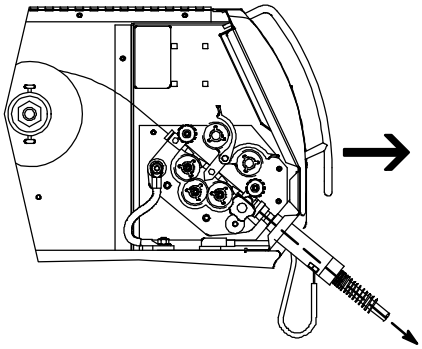

Push wire thru guides into gun; continue to hold wire.

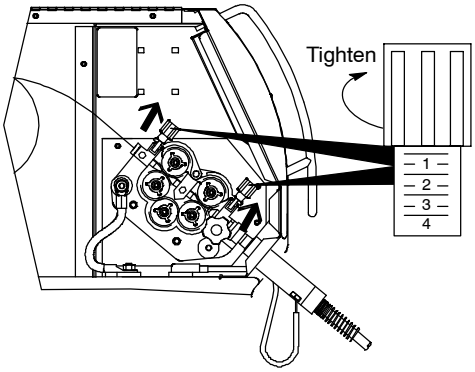

Close and tighten pressure assembly, and let go of wire.

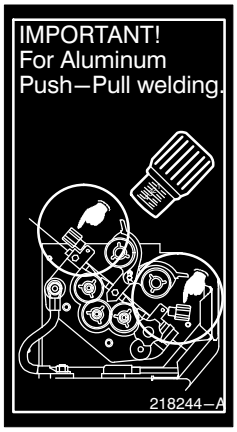

Use pressure indicator scale to set front drive roll pressure to 1 and rear drive roll pressure to less than 1.

See Section 5-18 for threading welding wire through XR guns.

Ref. 803 544-C / 218 243-A / 218 244-A / S-0627-A

5-18. Threading Welding Wire Through XR Guns

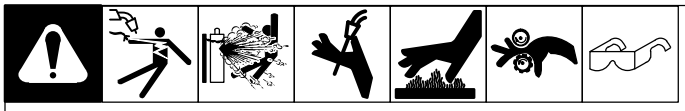

Welding wire is electrically live when gun trigger is used to jog wire.

For XR-A Edge Gun:

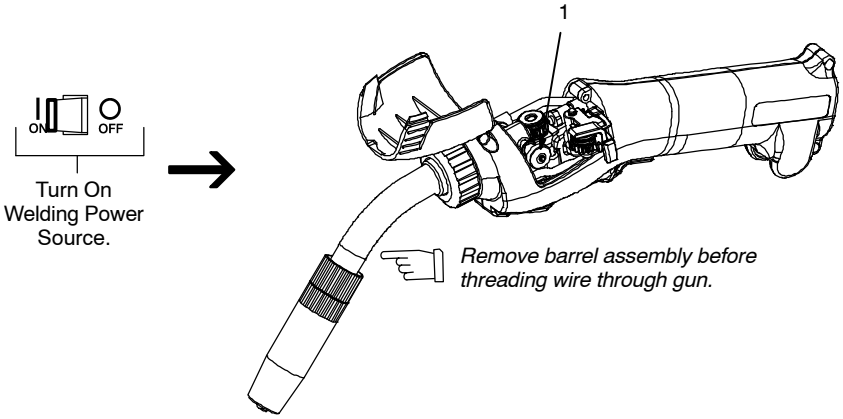

Refer to Section 5-17 for instructions on feeding wire through welding power source.

1 Pressure Roll Assembly

Lay gun cable out straight.

Open top cover, and open pressure roll assembly. If not already done, remove gun barrel assembly.

Press gun trigger until about 4 in. (102 mm) of wire is sticking out front of gun. Insert wire into barrel liner and tighten barrel assembly. Install correct size contact tube and install collet nut.

Close top cover on gun. Press trigger switch until about 6 in. (152 mm) of wire is sticking out end of contact tip. Cut off wire. Close and latch door.

XR Edge gun drive roll pressure should be set at minimum.

For XR-A Pistol Gun:

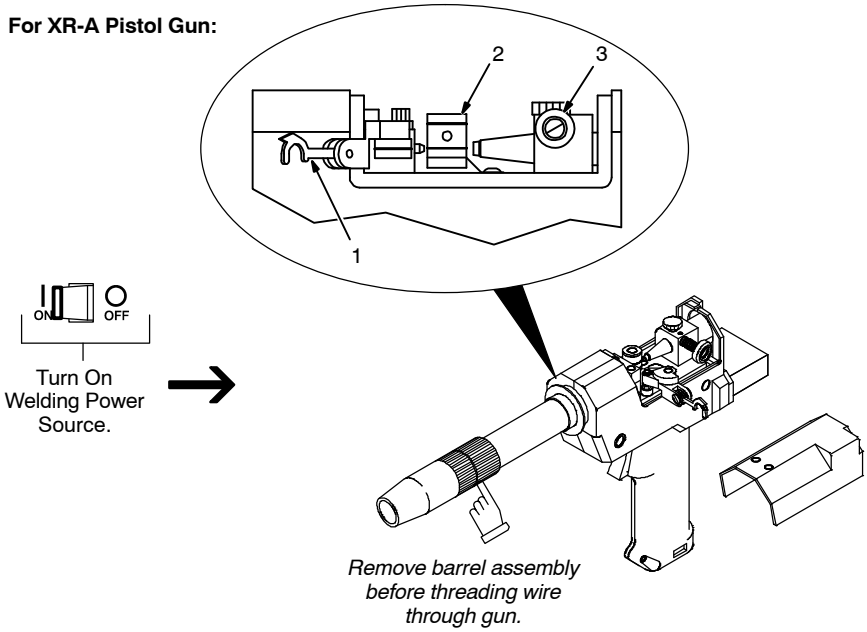

1 Pressure Roll Assembly

2 Drive Roll

3 Thumbscrew

Lay gun cable out straight. Open top cover, and lift pressure arm and open pressure roll assembly. If not already done, remove gun barrel assembly.

Manually thread wire along drive roll groove. Close pressure roll assembly. Press gun trigger until about 4 in. (102 mm) of wire is sticking out front of gun. Insert wire into barrel liner and tighten barrel assembly. Install correct size contact tube and install collet nut. Reinstall gun cover.

4 Pressure Adjustment Knob

See final pressure adjustment at bottom of page.

For XR-A Pistol Gun:

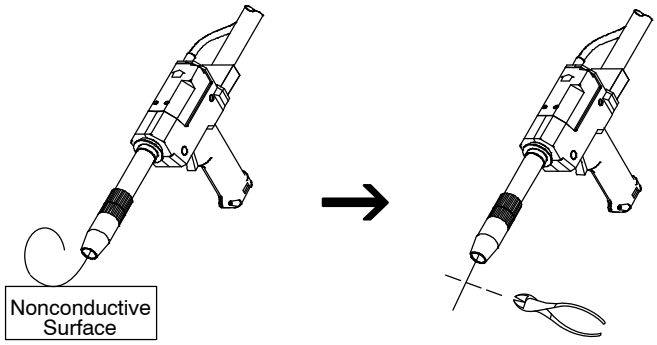

Feed wire to check drive roll pressure. Tighten knob enough to prevent slipping.

Do not exceed midrange setting.

Cut off wire. Close and latch door.

Turn welding power source Off.

Tools Needed:

Ref. 802 193-A / 801 556 / Ref. 151 666-C

SECTION 6 – OPERATION

6-1. Controls

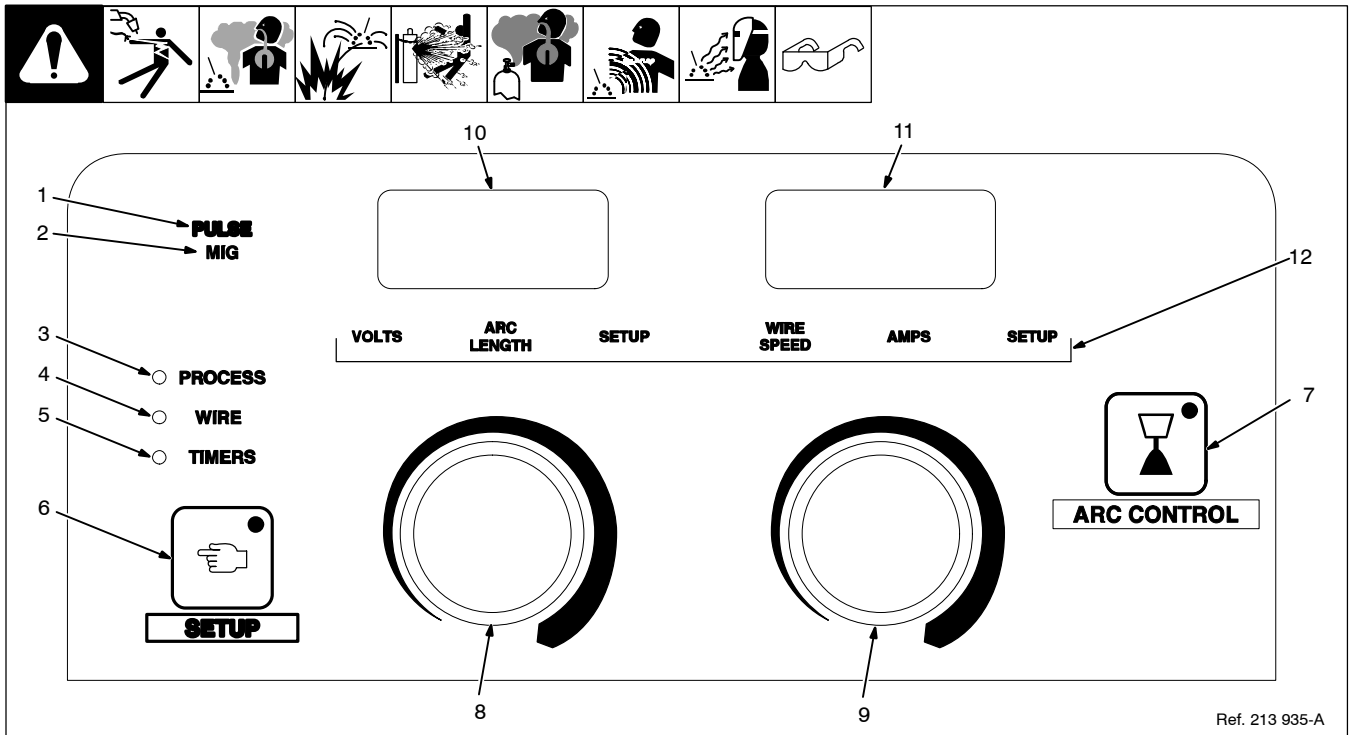

1 Pulse Indicator Light

Pulse only lights if unit has the pulse MIG module and is programmed for pulse MIG.

2 MIG Indicator Lights

Pulse (1) and MIG (2) illuminate to Indicate weld mode of unit.

3 Process Light

PROCESS illuminates when unit is in Process select menu.

4 Wire Light

WIRE illuminates when unit is in Pulse MIG program select menu.

5 Timers Light

TIMERS illuminates when unit is in Timers menu.

6 Setup Button

Use button to access Timers, Process and Wire menus.

7 Arc Control Button

Use button to select either inductance control in MIG welding mode or Sharp Arc in Pulse MIG welding mode.

8 Left Knob

Use knob to adjust volts in MIG welding mode or change parameter values in Setup.

9 Right Knob

Use knob to adjust wire speed in MIG welding mode or change parameter values in Setup.

10 Left Display

11 Right Display

12 Weld Functions/Setup Indicator Lights

VOLTS illuminates in MIG welding mode indicating volts in left display can be adjusted. Also, VOLTS lights to indicate left display is showing actual voltage during welding and for 5 seconds after the arc is extinguished.

ARC LENGTH illuminates in Pulse MIG welding mode indicating Arc Length can be adjusted.

SETUP illuminates when a parameter on the corresponding display above the light can be adjusted.

WIRE SPEED illuminates in either Pulse MIG or MIG welding mode indicating wire speed can be adjusted.

AMPS illuminates indicating welding amps appears in the display, instead of wire speed, during welding and for 5 seconds after the arc is extinguished.

☞ *The first time the welding power source is energized it starts in MIG welding mode. Each time after the initial startup, when the unit is turned off, whatever mode and parameter settings were last set will remain as the current settings the next time the unit is energized.*

6-2. MIG Mode

In MIG mode, VOLTS is lit under left display and WIRE SPEED is lit under right display. Left knob is used to adjust welding voltage within a range of 10-32 volts, and right knob is used to adjust wire feed speed within a range of 25-700 IPM. Refer to weld chart in front compartment for proper parameter settings according to wire type, shielding gas, and material type and thickness.

6-3. Jog Mode

If gun trigger is pressed and held for more than 3 seconds without striking an arc, unit will automatically shut off weld power. For MIG guns, shielding gas will shut off after 1 minute, and for spool guns, shielding gas will continue to flow because gas valve is located inside spool gun. For MIG guns, wire will feed for up to 2 minutes while trigger is pressed, then wire drive system in unit will automatically shut off. For spool guns, wire will feed for up to 30 seconds before shutting off. If gun trigger is pressed for 3 seconds without striking an arc the displays will show JOG MODE.

6-4. Weld Status

When trigger is released on a MIG gun, spool gun, or push-pull gun, the last actual amperage and voltage will be shown on the displays for 5 seconds. The VOLTS and AMPS indicator lights will illuminate under the displays and each value will appear in the corresponding display.

If a programmed value requires adjustment after the arc is extinguished and during the 5 seconds display of actual values, turning either knob will cause actual values in the displays to be replaced by programmed values for adjustment purposes.

☞ *The 5 second delay after the arc is extinguished for displaying actual weld values can be turned on or off in the Timer menu DISP selection (see Section 7-3).*

6-5. MIG Gun-On-Demand

The guns that can be used with this unit are MIG guns, spool guns, and push-pull guns. To switch from one gun to another, momentarily press the trigger on the desired unused gun to make it the active gun. Once the trigger is pressed, the unit will recall stored data and both displays will show the last programmed values for that particular gun. If the unit is powered down and back on again, the gun last used will become the current active gun.

6-6. Pulse MIG Mode Voltage Adjustment

In Pulse MIG mode there is no manual voltage adjustment; instead, voltage is synergically aligned with the proper wire feed speed. Arc Length adjustment is used to adjust actual arc length which automatically adjusts the voltage. See weld chart in front compartment for proper wire feed speed adjustment according to wire size and type.

6-7. Pulse MIG Gun-On-Demand

The spool gun functions slightly different in Pulse MIG mode. To switch from one gun to another, momentarily press the trigger on the desired unused gun to make it the active gun. Once the trigger is pressed, the unit will recall stored data and both displays will show the last programmed values for that particular gun. For a spool gun, the wire speed is taken from the position of the gun potentiometer. This wire speed value is automatically adjusted if the potentiometer is moved since the last time the gun was active. If the unit is powered down and back on again, the gun last used will become the current active gun.

6-8. Tip Saver

If gun contact tip is directly shorted to the workpiece while gun trigger is pressed, the welding arc automatically shuts off after 1 second to prevent wire burnback in the contact tip.

6-9. Weld Parameters For MIG Mode

MIG CHART

Note: All chart parameters reference settings for Horizontal T fillet welds. Settings may need to be modified for other types of welding joints or welding positions.

Material	Gas	Wire	1/2" (12.7mm)	3/8" (9.5mm)	1/4" (6.4mm)	3/16" (4.8mm)	1/8" (3.2mm)	14ga (2.0mm)	16ga (1.6mm)	18ga (1.2mm)	20ga (0.9mm)	22ga (0.8mm)
Steel	100% Co_2	.035	–	23.0/325	21.5/280	20.5/240	20.0/210	19.0/175	18.5/160	18.0/115	17.0/90	16.5/80
Inductance = 20–40		.045	–	23.0/220	21.5/200	20.5/175	20.0/150	19.0/110	18.5/105	–	–	–
Steel	75% Argon 25% Co_2	.035	29.3/530	28.5/485	19.5/330	18.5/275	18.0/260	16.5/200	16.0/155	15.5/135	15.0/100	14.5/95
Inductance = 20–40		.045	USE	SPRAY	19.0/220	18.0/200	17.5/170	16.2/150	16.0/130	15.5/100	–	–
Stainless Steel	90% Helium 7.5% Argon 2.5% Co_2	.035	–	25.0/450	22.5/440	21.5/375	21.0/325	20.0/275	18.0/235	18.5/200	17.5/150	–
Inductance = 60–80		.045	–	–	24.0/400	23.0/300	20.5/250	20.0/235	19.5/175	19.0/160	–	–
Metal Core Inductance = 30	90% Argon 10% Co_2	.045	29.0/475	27.0/425	26.0/400	24.5/350	23.5/300	–	–	–	–	–
Aluminum	100% Argon	.035 4043	–	23.5/700	23.0/530	21.5/450	19.2/380	18.2/300				
		3/64 4043	24.0/475	23.5/435	23.0/375	21.5/305	19.5/250					
		.035 5356	–	23.5/800	23.0/660	21.0/520	19.0/450					
Inductance = 30		3/64 5356	24.0/535	23.5/500	22.5/465	21.0/375	19.0/340					

Reference
Volts/Wirefeed
23.5 /220

MIG CHART

6-10. Weld Parameters For Pulse Mode

WELD CHARTS

All chart parameters are based on the following defaults: arc length – 50, Sharparc® – 25.

Material	Gas	Wire	1/2" (12.7mm)	3/8" (9.5mm)	1/4" (6.4mm)	3/16" (4.8mm)	1/8" (3.2mm)	14ga (2.0mm)	16ga (1.6mm)	18ga (1.2mm)	19ga (1.0mm)	22ga (0.8mm)
Steel	90% Argon 10% Co_2	.035	650	550	400	300	250	200	150	85	—	—
		.045	500	450	300	200	150	125	100	75	—	—
Stainless Steel	Ar/He/CO2 Tri–Mix	.035	600	500	400	300	200	175	150	100	—	—
		.045	450	350	200	150	125	100	75	50	—	—
Metal Core	90% Argon 10% Co_2	.045	475	400	325	250	200	150	125	115	—	—
Aluminum	100% Argon	.035 4043	750	650	550	450	310	210	185	150	130	—
		3/64 4043	450	390	325	260	200	140	110	90	75	—
		.035 5356	—	—	720	640	450	310	245	200	150	—
		3/64 5356	—	550	405	350	290	190	165	115	—	—

PULSE CHART

PULSE CHART

SECTION 7 – PROGRAMMING

7-1. MIG Welding Mode

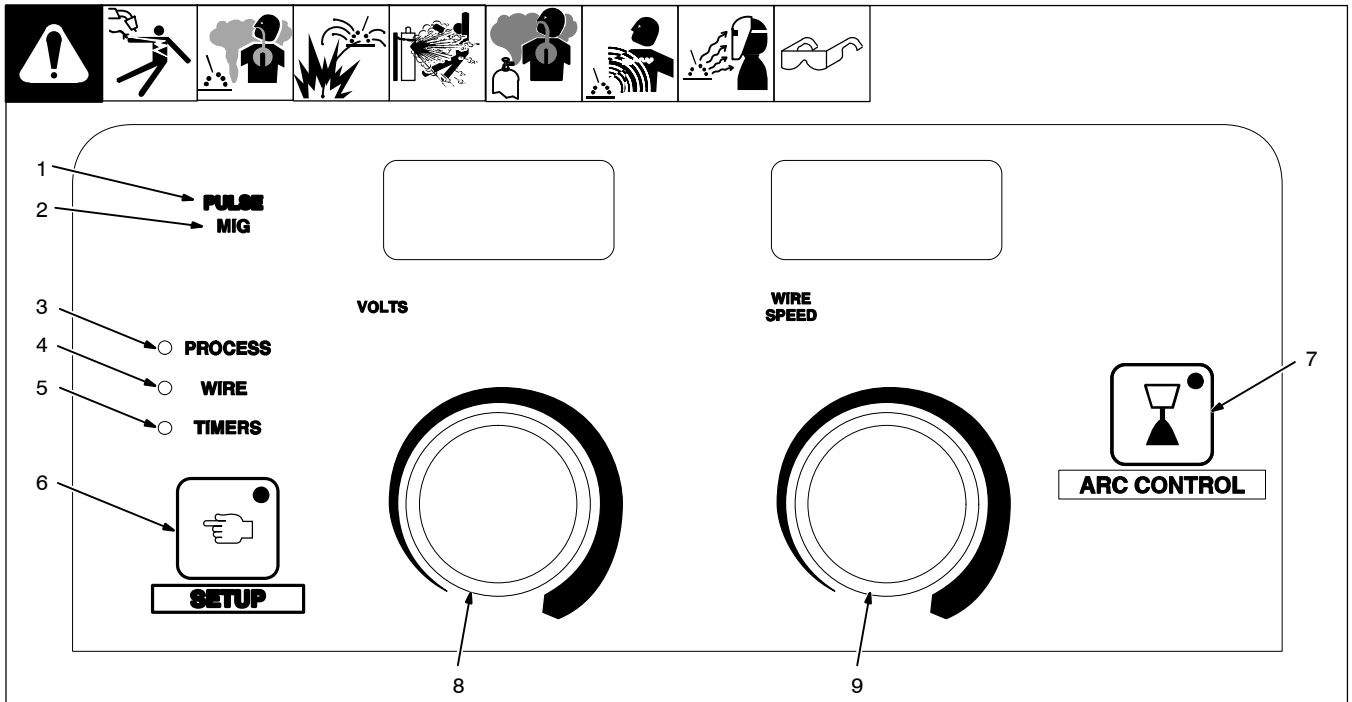

Ref. 213 935-A

When the **MIG** light (2) is illuminated, the unit is in MIG Welding mode.

SETUP

To enter **MIG** welding mode, depress the **SETUP** (6) button once to go to **GUN** selection. Rotate the right knob (9) to select the gun being used. Select MIG for standard MIG gun, or select XR-A, EDGE, PYTH alpr for push pull guns, or SPL for spoolgun.

Depress **SETUP** (6) a second time to illuminate the **PROCESS** (3) light. Rotate right knob (9) until MIG is displayed (for MIG only units NOT USED will be displayed).

Depress **SETUP** (6) button again to illuminate the **WIRE** (4) light. Adjust left knob (8) to select wire type, adjust right knob (9) to select wire size.

Depress **SETUP** (6) button again to illuminate **TIMERS** (5) light. For description of the **TIMERS**, refer to **TIMERS** menu (see Section 7-3)

If crater fill function menus are enabled, TIMERS light will stay on to allow for adjustment of crater parameters and timers (see Section 7-6).

Depress **SETUP** (6) button again to exit menus and enter **MIG** welding mode.

OPERATION

Adjust welding Voltage with left knob (8) and Wire Feed Speed with right knob (9). Refer to MIG welding chart for proper Voltage and Wire Feed Speed setting in reference to material type, material thickness, wire, and gas (see Section 6-9).

ARC CONTROL

MIG welding mode: Depress **ARC CONTROL** (7) button to enter Arc control menu and INDU will appear on the left display and the corresponding setting will appear on the right display. Adjust right knob (9) to adjust inductance setting. In MIG welding mode the Arc control is an inductance control from 0-99. Refer to MIG welding chart for suggested Inductance setting for the wire and gas types being used (see Section 6-9). Changing the inductance will change the fluidity of the puddle.

Low Inductance Weld Bead (0 setting)

High Inductance Weld Bead 99 setting

7-2. Pulse MIG Welding Mode

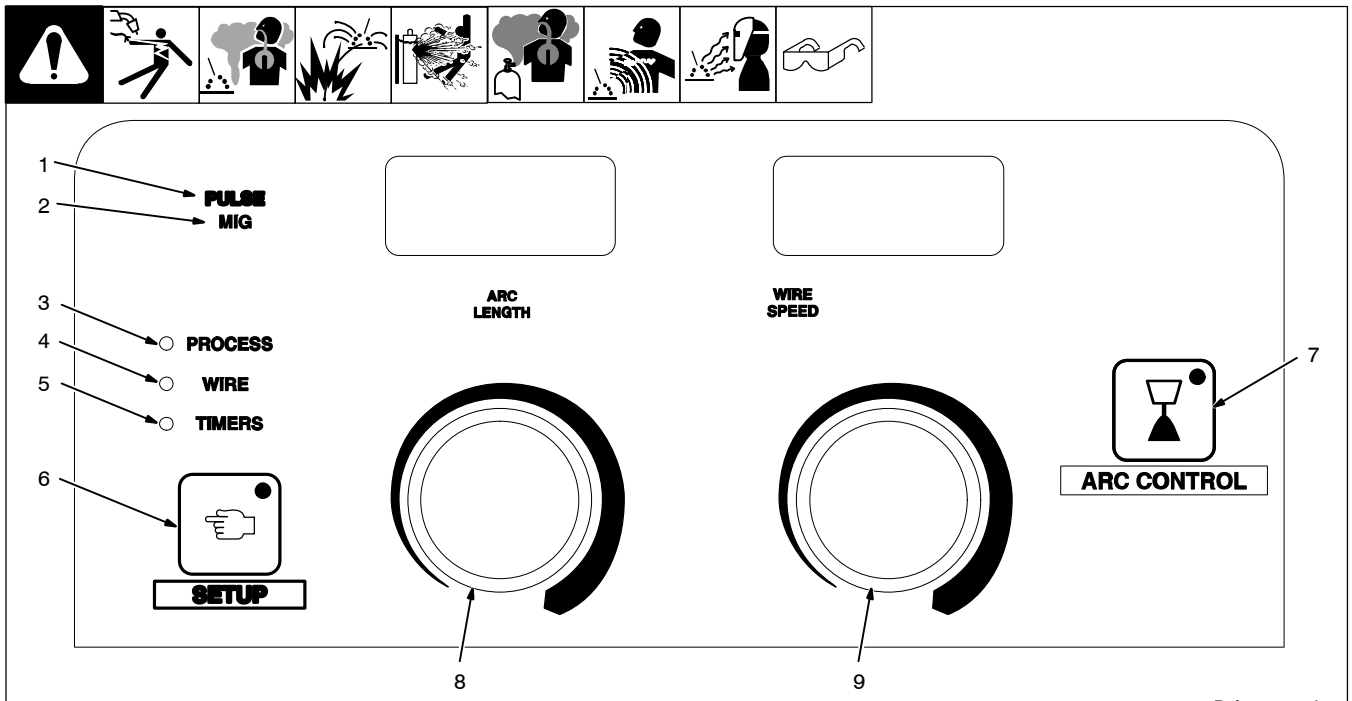

Ref. 213 935-A

When the PULSE MIG (1, 2) is illuminated, the unit is in Pulse MIG Welding mode.

SETUP

To enter Pulse MIG welding mode, depress the **SETUP** (6) button once to go to **GUN** selection. Rotate the right knob (9) to select the gun being used. Select MIG for standard MIG gun, or select XR-A, EDGE, PYTH alpr for push pull guns, or SPL for spoolgun.

Depress **SETUP** (6) a second time to illuminate the **PROCESS** (3) light. Rotate right knob (9) until PULS is displayed.

Depress **SETUP** (6) button again to illuminate the **WIRE** (4) light. Adjust left knob (8) to select wire type, adjust right knob (9) to select wire size.

Depress **SETUP** (6) button again to exit **WIRE** menu and enter **TIMERS** (5) menu. The **TIMERS** (5) light will illuminate. For description of the **TIMERS**, refer to **TIMERS** menu (see Section 7-3)

If crater fill function menus are enabled, TIMERS light will stay on to allow for adjustment of crater parameters and timers (see Section 7-6).

Depress **SETUP** (6) button again to exit menus and enter **PULSE** welding mode.

OPERATION

Adjust right knob (9) for proper Wire Feed speed and adjust left knob (8) to change Arc Length if required. Arc length will default to 50 if never adjusted previously. Refer to Pulse MIG welding chart for proper Wire Speed setting for metal and metal thickness being welded (see Section 6-9). All Pulse MIG programs are setup with the gases listed in the Pulse MIG welding chart. If alternate gases are used, adjust **Arc Length** and/or **Sharp Arc** (Arc Control) (7) to adjust arc characteristics.

ARC LENGTH

Arc length can be adjusted from 0-99. All Pulse MIG programs are set with a value of 50. Adjusting the Arc Length will vary the length of the welding arc cone.

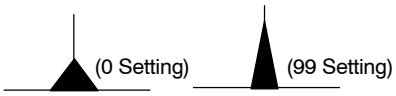

Low Setting High Setting

If a gas is used other than what is listed on the **Pulse MIG** welding program chart, the Arc Length can be adjusted to help customize your arc to the gas being used.

ARC CONTROL

Pulse MIG (1, 2) welding mode: Depress **ARC CONTROL** (7) button to enter Arc Control menu for sharp arc. SHRP will appear on the left display and the corresponding setting will appear on the right display. The setting can be adjusted from 0-50 and all **Pulse MIG** welding programs are designed with a setting of 25. Adjusting the Sharp Arc setting will vary the width of the welding arc cone.

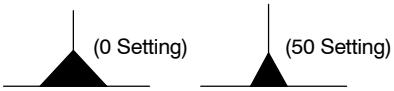

Low Setting High Setting

If a gas is used other than what is listed on the Pulse MIG welding program chart, the Sharp Arc can be adjusted to help customize your arc to the gas being used.

7-3. Timers

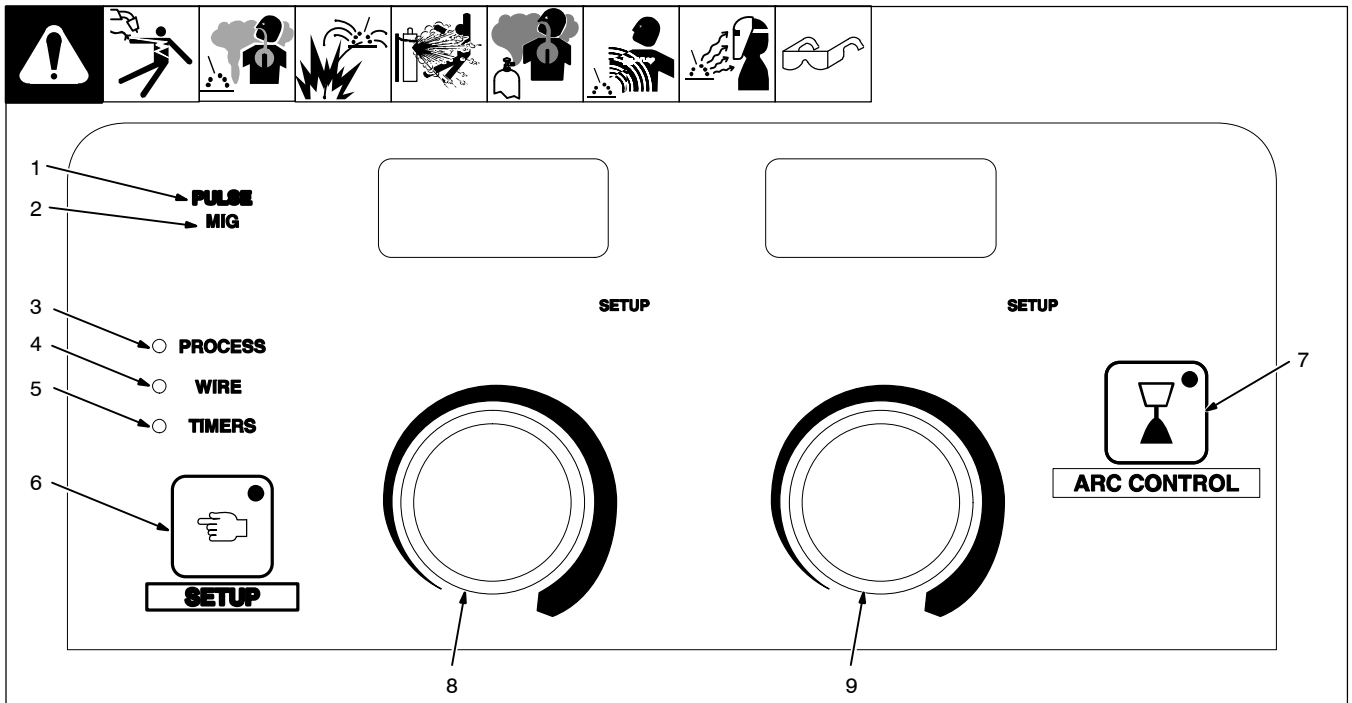

Ref. 213 935-A

To enter the **TIMERS** (5) menu depress the **SETUP** (6) button 4 times or until the **TIMERS** light (5) is illuminated.

Items that can be adjusted in this menu are:

Run-in speed (R-IN) – The speed of the wire prior to the welding arc being struck. This setting is a percentage of the Wire Feed Speed the unit is set to for welding. Programming value ranges from 25-150.

Preflow (PRE) – The amount of time that the shielding gas will flow after the trigger is depressed and before the welding arc will be allowed to be active. Range of setting is from 0-5 seconds.

Postflow (POST) – The amount of time that the shielding gas will flow after the arc has been shut off. Range of setting is 0-10 seconds.

Spot Timer (SPOT) – The amount of time that the arc will be active before it shuts off automatically. Range of setting is from 0-120 seconds. Spot timer is reset upon release of welding gun trigger.

Display (DISP) – Allows the Wire Speed display to show actual welding amperage while arc is active and for 5 seconds after arc is shut off. Setting is either **AMPS** or **WFS** for standard Wire Feed Speed.

Once in the **TIMERS** (5) menu, rotate the left knob (8) to find a particular item, and rotate the right knob (9) to change setting or status.

Depress **SETUP** (6) button to get out of **TIMERS** (5) menu and to enter welding mode.

7-4. Arc Times, Arc Starts, Hot Start (Aluminum Pulse Only), And Crater Fill

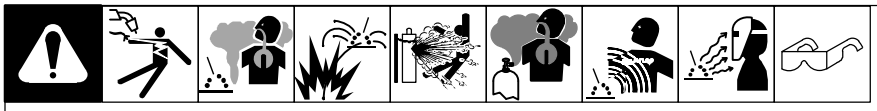

Accessing the Arc Times, Arc Starts, Hot Start (aluminum pulse only), and Crater Fill data will also allow access to Software Version data and Motor Calibration function. The software version data and motor calibration function are for use by factory authorized service personnel only.
Do not use the motor calibration function if it appears on the displays.

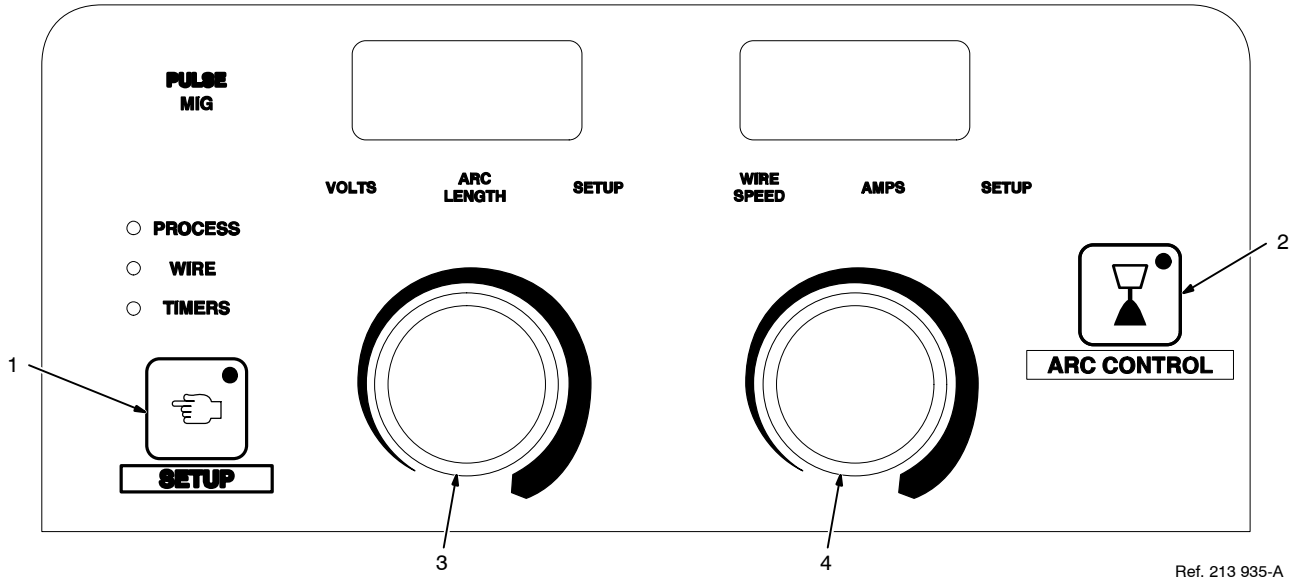

Arc times and number of arc starts are saved in unit memory. To view this information, press both **SETUP** (1) and **ARC CONTROL** (2) buttons at the same time.

Left display will initially show arc hours.

Rotate left knob (3) and display will change to show number of arc starts.

To turn on the Crater Fill display, rotate left knob (3) until CRTR appears in the left display. The factory default for Crater Fill display is OFF which appears in the right display. Rotate the right knob (4) until ON appears in the display.

The Crater Fill display can be turned off after parameters are set in programs, but remember that once crater fill is turned on in any program, it will remain on even though it does not appear in the displays because Crater Fill display is turned off.

To exit this menu, press either the **SETUP** (1) or **ARC CONTROL** (2) button, or press a gun trigger on any welding gun connected to the unit.

7-5. Setting Hot Start (Aluminum Pulse Only) Parameters

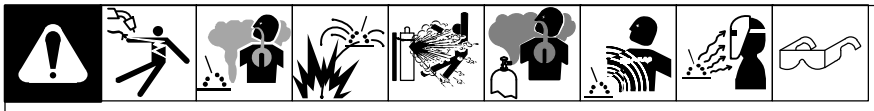

The factory default setting for Hot Start is "Auto" on 350P models. The Auto setting has preset parameters. Hot Start can also be set to "On" (manual) for customized settings or made inactive when set to Off.

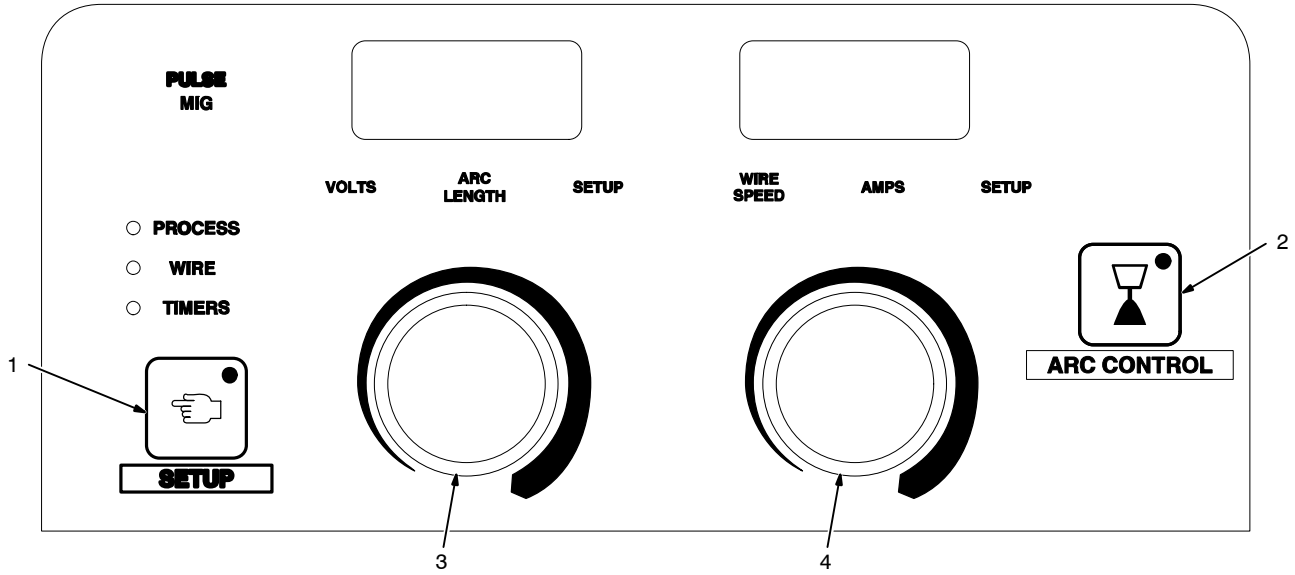

Ref. 213 935-A

To access the Setup Feature Menu, press both **SETUP** (1) and **ARC CONTROL** (2) buttons at the same time.

Left display will initially show arc hours.

Rotate left knob (3) until ALST appears in the left display.

Rotate right knob (4) to select hot start mode as follows:

Auto – default setting for preset hot start parameters

Off – hot start is inactive

On – allows customized setting of hot start parameters

Manual Hot Start Mode

When ALST appears in the left display and On appears in the right display, the welding power source is set for manual hot start mode.

To access hot start parameters, press the **SETUP** (1) button until SPWR appears in the left display.

SPWR – Start Power

Range for start power is 100-250 as a percent of wire feed speed.

SPWR maximum setting will depend on set wire feed speed and may not allow a setting of 250 under certain conditions.

STMR – Start Time

Time range is 0.0-0.5 seconds for hot start to be on.

STRL – Start Arc Length

Range for start arc length is 0-99 that changes arc length from shorter to longer.

RMPT – Ramp Time

Time range is 0.1-5.0 for the time it takes to go from hot start to set wire feed speed.

The two parameters that will have the largest influence on hot start are Start Power and Start Time. These two parameters will determine how much heat is provided and for how long at the beginning of the weld.

To exit this menu, press the **SETUP** (1) button.

7-6. Setting Crater Fill

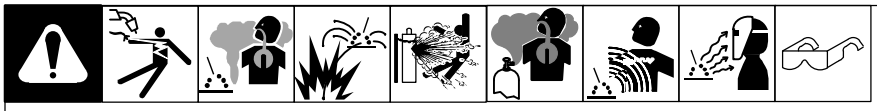

Crater parameters are welding gun independent (i.e. crater fill can be on for a spool gun and off for a MIG gun). When using the same welding gun, MIG and pulse programs are independent of each other; however, crater parameters will be the same for all pulse programs. For example, if a MIG gun is using the .035 steel pulse program, and crater fill is on and parameters are set, crater will also be on and the same parameters will be set for a stainless pulse program.

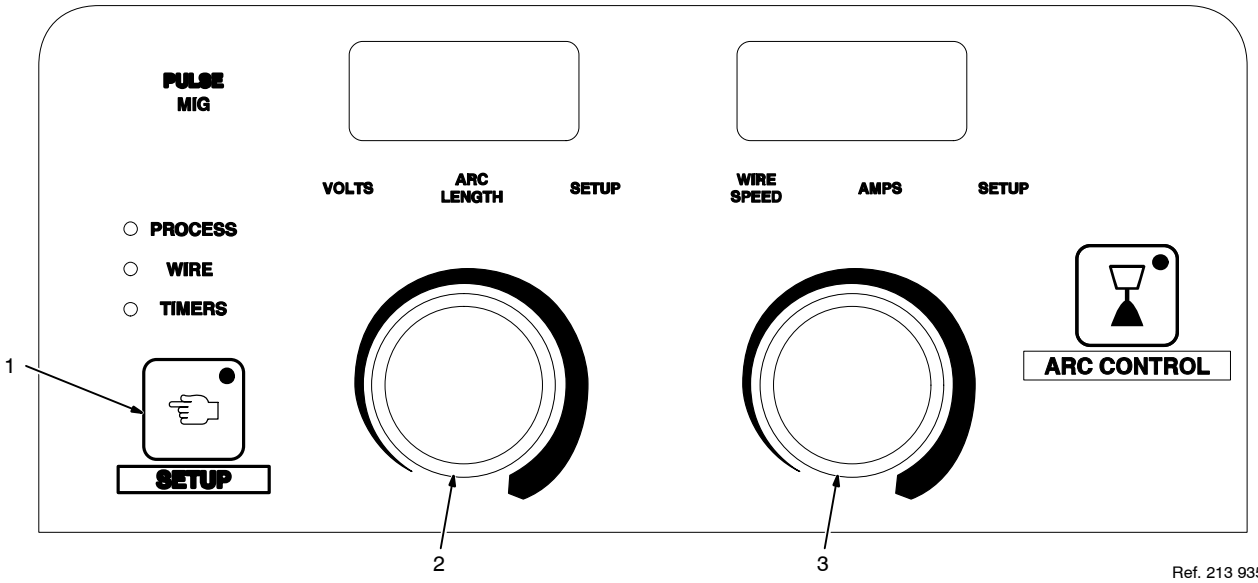

Ref. 213 935-A

To set Crater Fill, select a program and press **SETUP** (1) until the **TIMERS** LED turns on. Press **SETUP** again and the left display will show CRTR and the right display will show OFF.

Rotate right knob (3) to turn crater ON.

Rotate left knob (2) to change display to WFS, and rotate right knob (3) to set crater wire feed speed. Wire feed speed range is 50-700 IPM (see Section 7-7).

Rotate left knob (2) to change display to TIME, and rotate right knob (3) to set crater time. Time range is 0.1-5.0 seconds (see Section 7-7).

Rotate left knob (2) to change display to VOLT (MIG program) or ARCL (pulse program), and rotate right knob (3) to set either volts (range is 10.0-32.0 volts) or arc length [range is 0-99 (see Section 7-7)].

Rotate left knob (2) to change display to TDLY for time delay. This setting is for spot or skip welding without crater fill if the arc time is less than the set time. Time range is 0.0-5.0 seconds (i.e. if TDLY is set for 2.0 seconds, weld operation will not go into crater if gun trigger is released before 2.0 seconds).

To exit this menu, press the **SETUP** (1) button.

7-7. Recommended Crater Fill Parameters

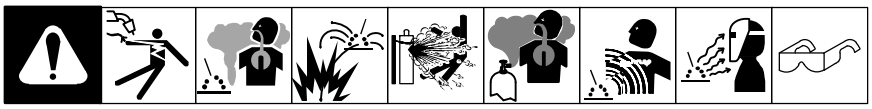

Recommended Crater Parameters

What Process are You Using?	What Material are You Welding?	Suggested Wire Types	Suggested Shielding Gases	Wire Sizes (Diameter)	1/2" (12.7mm)
MIG	Steel	Solid (or hard) E70S-6	75% Co_2/ 25% Ar	0.035" (0.9mm)	—
				0.045" (1.1mm)	—
	Stainless Steel	Stainless steel ER 308LSI ER 309LSI	Tri-Mix, (90% He / 7.5%Ar 2.5% Co_2)	0.035" (0.9mm)	—
				0.045" (1.1mm)	—
	Steel	Metal Core	90% Ar / 10% Co_2	0.045" (1.1mm)	400/26.7/1.0
	Aluminum	4043	100% Ar	0.035" (0.9mm)	300/22/2.0
				0.047" (1.2mm)	190/21.5/1.15
	Aluminum	5356	100% Ar	0.035" (0.9mm)	—
				0.047" (1.2mm)	180/18.5/1.25
PULSE	Steel	Solid (or hard) ER70S-6	90% Ar / 10% Co_2	0.035" (0.9mm)	85/40/1.0
				0.045" (1.1mm)	75/30/2.0
	Stainless Steel	Stainless steel ER 308LSI ER 309LSI	Ar / He / Co_2 Tri-Mix	0.035" (0.9mm)	—
				0.045" (1.1mm)	—
	Steel	Metal Core	90% Ar / 10% Co_2	0.045" (1.1mm)	335/45/1.0
	Aluminum	4043	100% Ar	0.035" (0.9mm)	100/35/2.0
				0.047" (1.2mm)	75/20/1.5
	Aluminum	5356	100% Ar	0.035" (0.9mm)	—
				0.047" (1.2mm)	—

MIG SETTINGS EXAMPLE

Wire speed / Volts / Time

90 / 13.5 / 1.0

PULSE SETTINGS EXAMPLE

Wire speed / Arc length / Time

90 / 30 / 1.0

3/8" (9.5 mm)	1/4" (6.4 mm)	3/16" (4.8 mm)	1/8" (3.2 mm)	14 ga. (2.0 mm)	16 ga. (1.6 mm)	18 ga. (1.2 mm)	19ga. (1.05mm)	20ga. (0.9mm)
90/13.5/1.0	90/13.5/1.0	90/13.5/0.75	90/13.5/0.75	90/13.5/0.75	90/13.5/.075	90/13.5/.075	—	—
125/19/2.0	50/15/1.0	50/15/1.0	50/15/1.0	50/15/1.0	50/15/1.0	50/15/1.0	50/15/1.0	50/15/1.0
75/15/0.75	75/15/0.75	75/15/0.75	75/15/0.75	75/15/0.75	75/15/0.75	75/15/0.75	—	—
75/15/1.25	75/15/1.25	75/15/1.25	75/15/0.75	75/15/0.75	75/15/0.75	75/15/0.75	—	—
350/24.5/1.0	300/23.5/1.0	250/23/1.0	225/22.8/1.0	75/15/0.75	75/15/0.75	75/15/0.75	—	—
300/22/2.0	200/12/1.25	200/12/1.25	150/11/1.25	200/11/0.90	—	—	—	—
190/21.5/1.15	190/21.5/1.15	200/19.5/1.25	215/17/1.0	—	—	—	—	—
—	250/19.5/1.25	250/17/1.25	250/17/1.25	—	—	—	—	—
180/18.5/1.25	180/18.5/1.25	180/16/1.25	180/16/1.25	—	—	—	—	—
85/40/1.0	85/30/1.0	85/30/1.0	85/30/1.0	85/30/1.0	85/30/1.0	85/30/1.0	—	—
75/30/2.0	75/30/2.0	75/30/1.5	75/30/1.0	75/30/1.0	75/30/0.75	75/30/0.75	—	—
90/30/1.0	90/30/1.0	90/30/1.0	90/30/1.0	90/30/0.75	90/30/0.75	75/30/0.75	—	—
75//30/2.0	75//30/2.0	75/30/1.0	75/30/1.0	75/30/1.0	50/30/0.75	50/30/.075	—	—
275/45/1.0	230/45/1.0	175/50/1.0	150/50/1.0	130/45/1.0	115/40/1.0	115/40/1.0	—	—
100/35/2.0	100/35/2.0	100/35/2.0	100/35/1.5	100/20/1.5	100/25/1.2	100/25/1.2	100/35/1.0	—
75/20/1.5	75/20/1.5	75/20/1.5	75/20/1.5	75/20/1.5	75/20/1.0	75/20/1.0	—	—
—	120/30/1.75	120/30/1.50	120/30/1.50	120/30/1.0	120/30/1.0	120/30/1.0	120/30/1.0	—
—	105/30/1.50	105/30/1.50	105/30/1.25	105/30/1.0	105/30/1.0	105/30/0.75	—	—

SC-187 212-A

7-8. System Reset

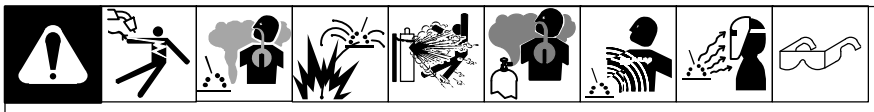

☞ *Accessing the System Reset function will also allow access to Timer Reset (RTMR) and Option Reset (ORST) functions. The timer reset and option reset functions are for use by factory authorized service personnel only.*
Do not use the timer reset or option reset functions if they appear on the displays.

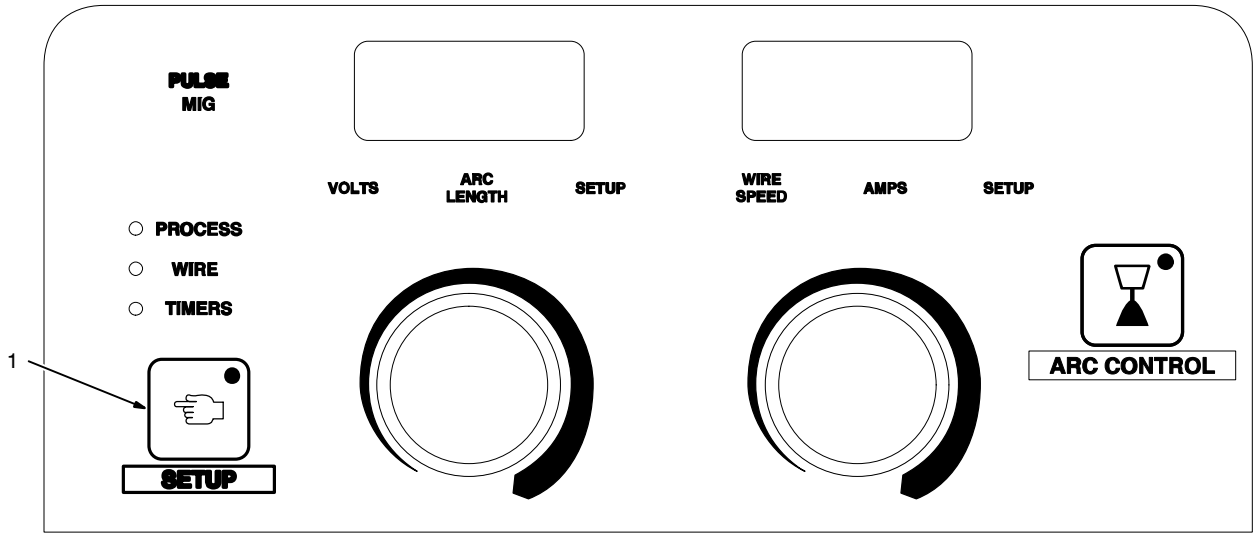

Ref. 213 935-A

A system reset function is available that completely resets unit back to all the original factory settings.

To access this menu, turn on welding power source, then press the **SETUP** (1) button when the SETUP light illuminates under the Left display.

SRST will appear on the left display and OFF will appear on the right display.

To prepare the unit for system reset, rotate right knob until ON appears on the right display.

To apply the system reset function, press **SETUP** (1) button, and wait until unit completely reboots before performing any other operations.

7-9. Motor Calibration Function

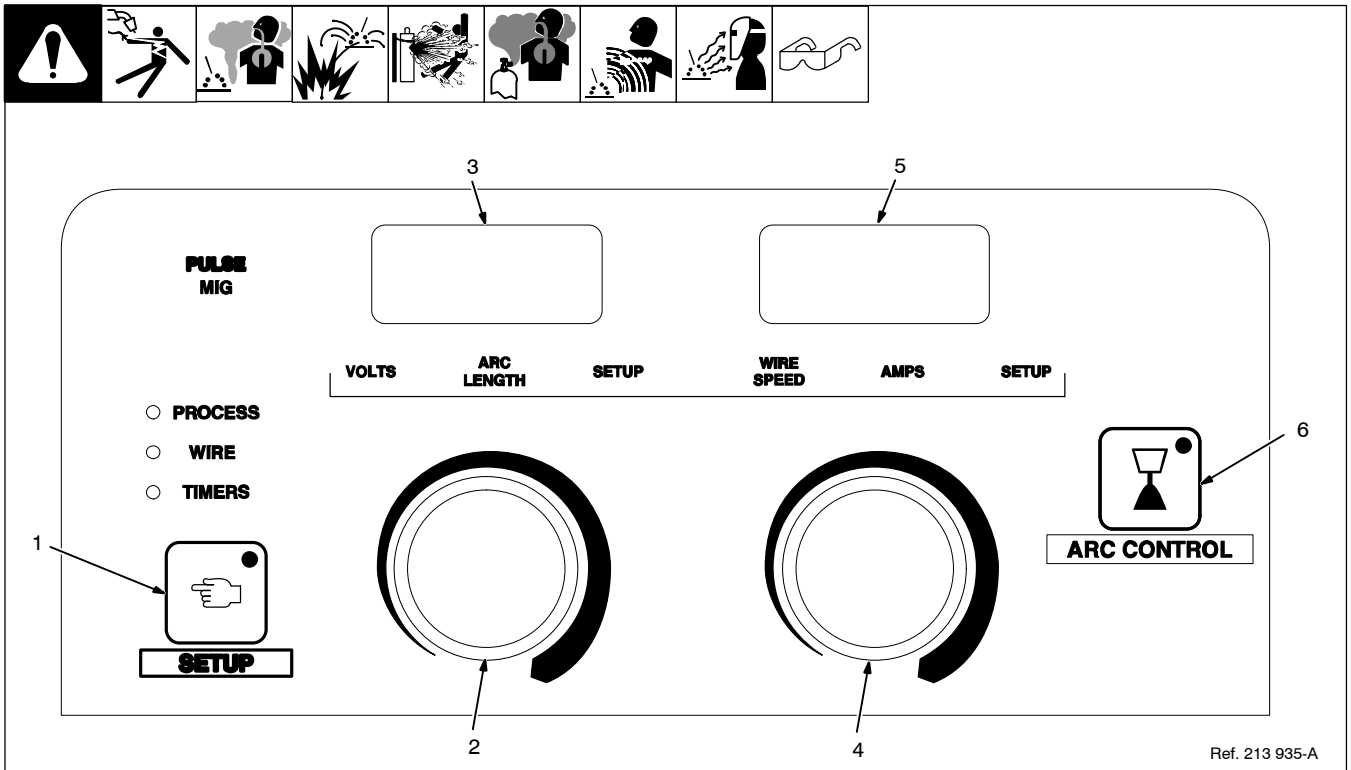

Perform this function after replacing wire drive motor and/or control circuit board. The motor calibration function automatically calibrates the wire drive motor to enhance arc starting performance and consistency.

To obtain the most accurate calibration, set up welding power source in MIG welding mode.

Turn on unit input power.

1 Setup Button

2 Left Knob

3 Left Display

4 Right Knob

5 Right Display

6 Arc Control Button

Open drive rolls in welding power source and in push/pull gun if one is attached to unit.

Simultaneously press Setup and Arc Control buttons.

Rotate left knob until MCAL is displayed.

Rotate right knob until YES is displayed.

Press and hold gun trigger. Wire drive speed will be overridden to 50 IPM for 12 seconds and then to 800 IPM for 12 seconds.

When CAL DONE appears on the display, release gun trigger.

Data save will appear on the display while the calibration data is being stored in the Control board memory.

Close drive rolls in welding power source and push/pull gun.

This completes the motor calibration function, and normal operation can resume.

Welding wire birdnesting at the welding power source drive rolls may occur if this value is set too high.

7-10. Set Up Push Motor Torque (SUP)

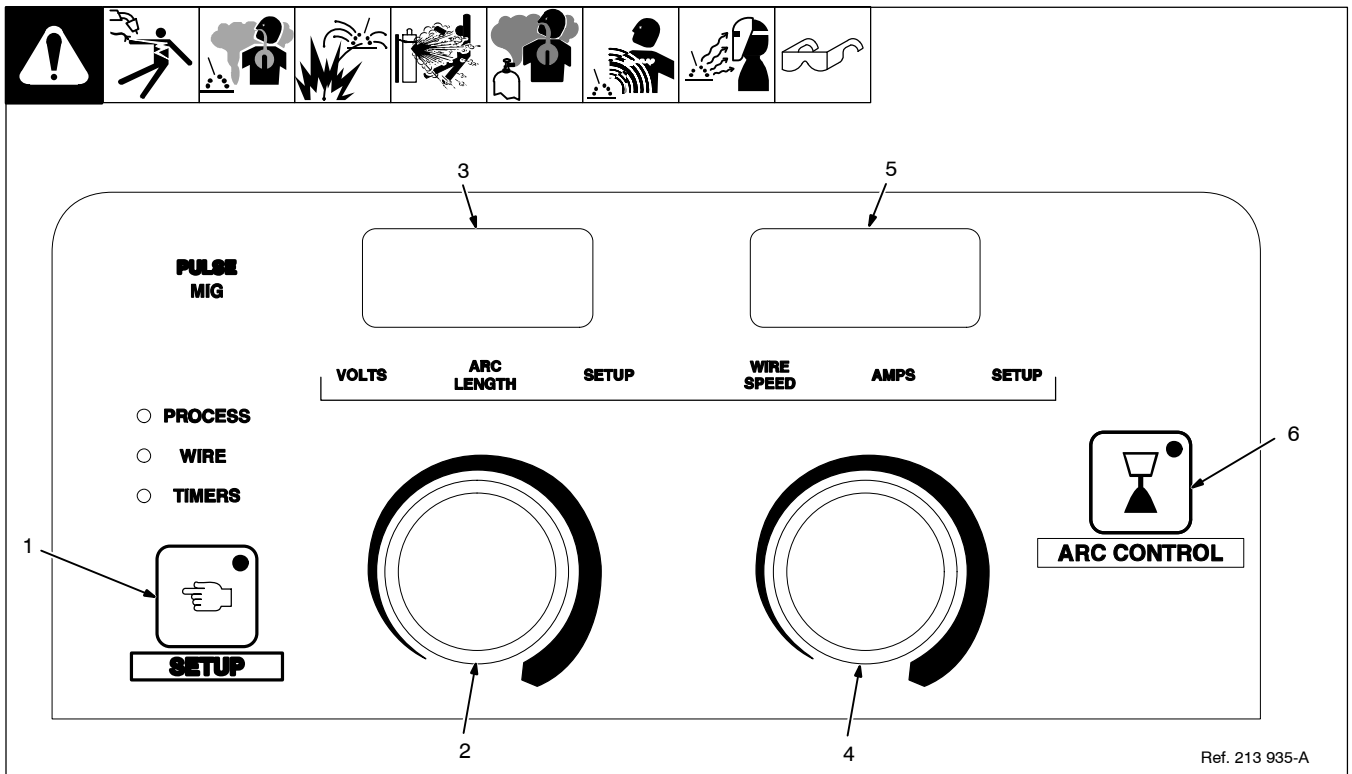

1 Setup Button

2 Left Knob

3 Left Display

4 Right Knob

5 Right Display

6 Arc Control Button

Simultaneously press Setup and Arc Control buttons.

Rotate the left knob counterclockwise (CCW) to find the particular item, and rotate the right knob to change the setting.

The following items can be adjusted by rotating the left knob counterclockwise (CCW):

Set up Push Motor Torque (SUP) – This feature is only active when a push/pull gun is connected to the welding power source. The (SUP) setting will adjust the over-torque limit of the push motor inside the welding power source. The range is 0-250 and the default value is 130. Increasing this setting will increase the over-torque limit and speed up the remote wire feed speed motor.

If Aluma-Pro push/pull gun has a listed SUP value, set the power source to match the SUP value.

SECTION 8 – MAINTENANCE &TROUBLESHOOTING

8-1. Routine Maintenance

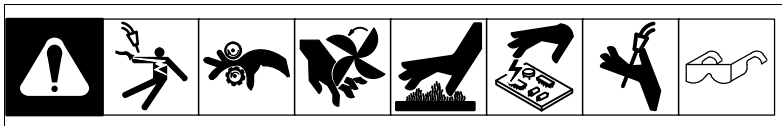

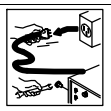

Disconnect power before maintaining.

Maintain more often during severe conditions.

	✓ = Check ◇ = Change ◯ = Clean ☆ = Replace * To be done by Factory Authorized Service Agent				Reference
Every 3 Months	 ☆ Damaged Or Unreadable Labels	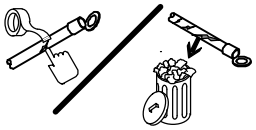 ☆ Repair Or Replace Cracked Weld Cable	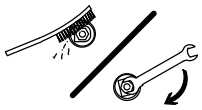 ◯ Clean And Tighten Weld Terminals	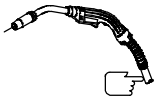 ✓ Check Gun Cable	
Every 6 Months	 ◯ Inside Unit	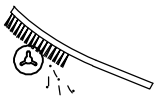 ◯ Clean Drive Rolls			

8-2. Overheating

Thermistors RT1 and RT2 protect the unit from damage due to overheating. If output diode heatsink or IGBT heatsink gets too hot, RT1 and/or RT2 opens and output stops. The fan keeps running to cool the unit. Wait several minutes before trying to weld.

8-3. Measuring And Discharging Input Capacitor Voltage

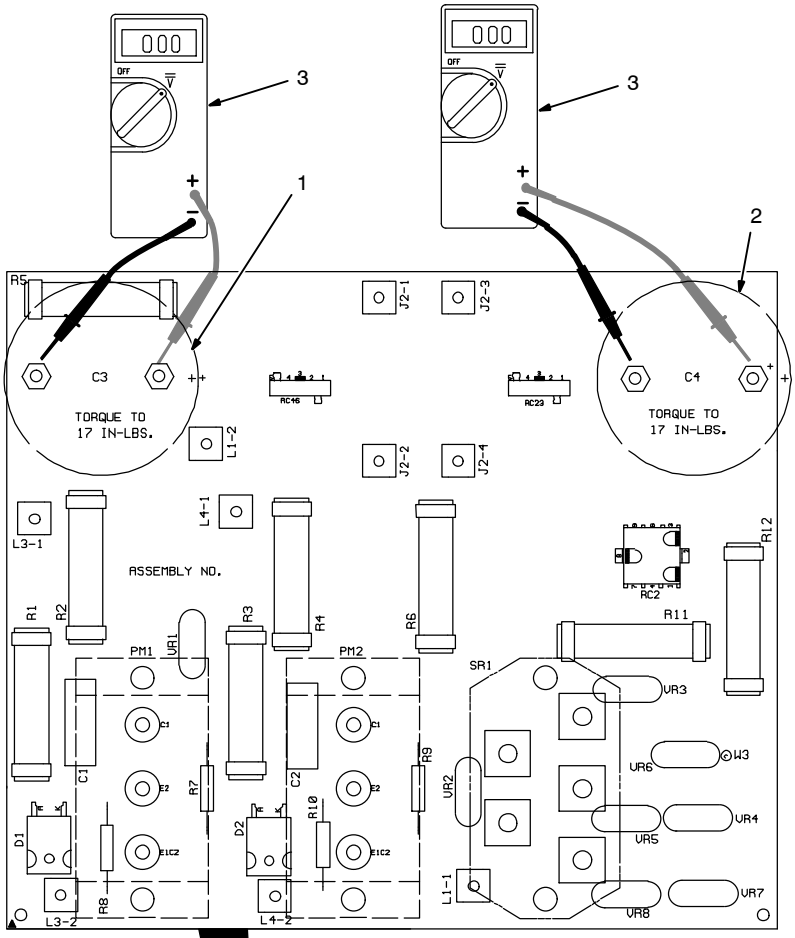

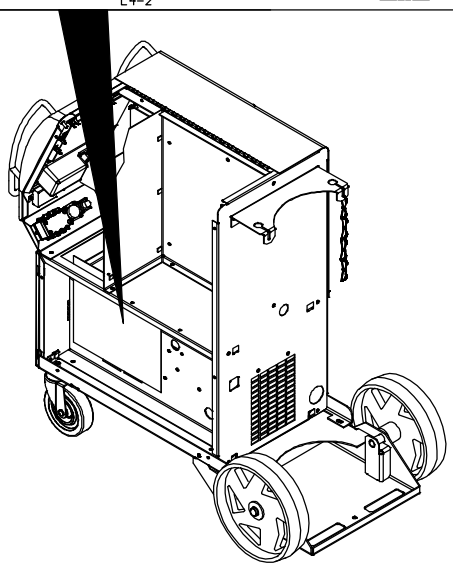

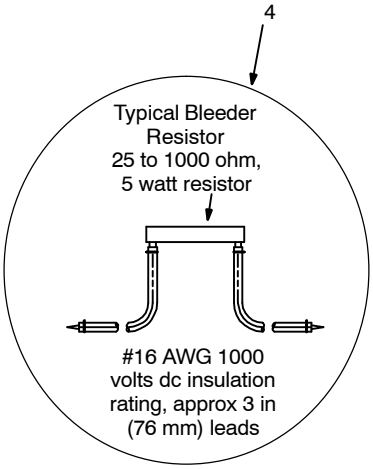

Turn Off welding power source, and disconnect input power.

Significant DC voltage can remain on capacitors after unit is Off. Always check capacitors as shown to be sure they have discharged before working on unit.

Turn Off welding power source and disconnect input power.

Remove case.

1 Input Capacitor C3 Terminals

2 Input Capacitor C4 Terminals

3 Voltmeter

Check input capacitors as shown.

Measure the dc voltage across the positive (+) and negative (–) terminals until voltage drops to near 0 (zero) volts.

4 Typical Bleeder Resistor

An example of a typical bleeder resistor is shown on this page.

Proceed with job inside unit. Reinstall case when finished.

Tools Needed:

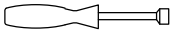

5/16 in.

221 044-A / Ref. 803 550-B

8-4. Changing Drive Roll And Wire Inlet Guide

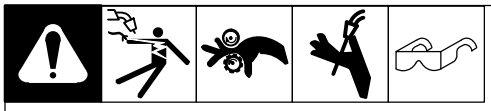

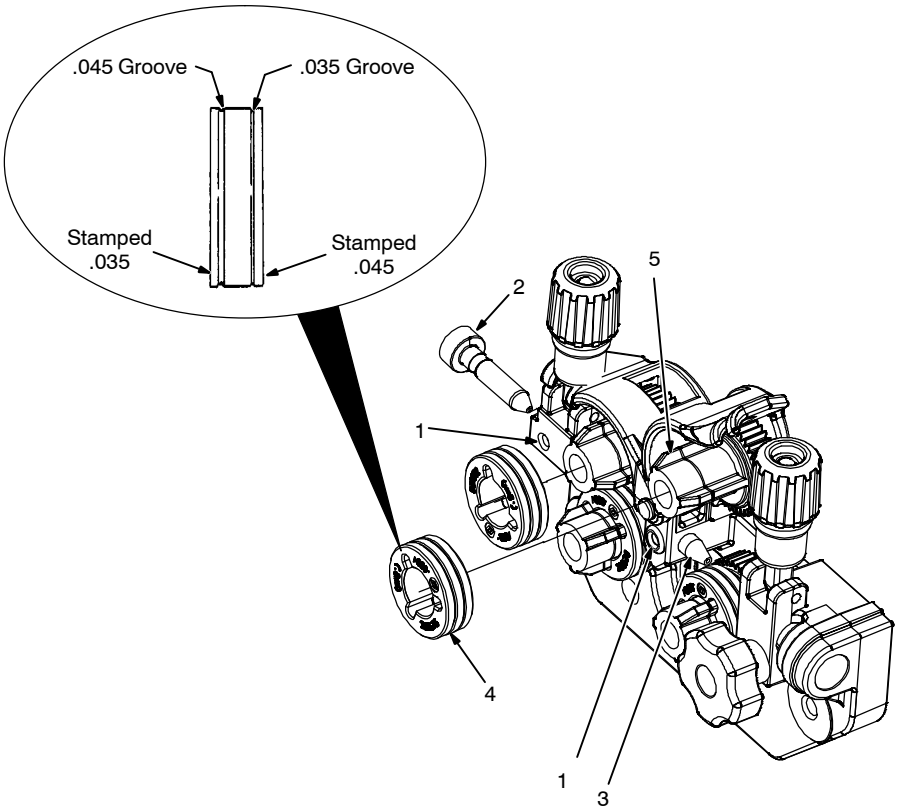

1 Securing Screw

2 Inlet Wire Guide

Loosen screw. Slide tip as close to drive rolls as possible without touching. Tighten screw.

3 Intermediate Guide

4 Drive Roll

The drive assembly comes equipped with factory installed .035/.045 combination drive rolls. Be sure that all 4 drive rolls are installed correctly.

Combination drive rolls consist of two different sized grooves. The stamped markings on the end surface of the drive roll refers to the groove on the opposite side of the drive roll. The groove closest to the carrier gear is the groove for the wire size viewed on the end surface of the drive roll.

Install correct drive roll for wire size and type.

U-Grooved drive rolls are required for feeding aluminum wire.

5 Drive Roll Securing Nut

Turn nut one click to secure drive roll.

Tools Needed:

5/64 in.

7/16 in.

802 520-C

8-5. Help Displays

V	A
HELP	0
HELP	1
HELP	2
HELP	3
HELP	4
HELP	5
HELP	6
HELP	7
HELP	8
HELP	9
HELP	10
HELP	11
TIP	SAVE
MM	350P
MM	350
JOG	XXX

Displays a jog wire feed speed.

All directions are in reference to the front of the unit. All circuitry referred to is located inside the unit.

- **Help 0**

Indicates overheating on left side of unit (displays flash between OVER TEMP and HELP 0). Unit will shutdown until internal temperature drops within operational range.

- **Help 1**

Turn off primary input power and check input voltage per primary voltage rating of welder, and correct if necessary. If HELP 1 persists, this Indicates a communication error between control board PC1 and user interface board. Contact nearest Factory Authorized Service Agent.

- **Help 2**

Indicates overheating on right side of unit (displays flash between OVER TEMP and HELP 2). Unit will shutdown until internal temperature drops within operational range.

- **Help 3**

Indicates gun trigger was pulled and held during power up. Release gun trigger and clear fault condition. Also, this display can Indicate no open circuit voltage detected when gun trigger is pulled and no arc detected within 3 seconds. Turn off primary input power and contact a Factory Authorized Service Agent.

- **Help 4**

Indicates gun trigger was pulled and held for 2 minutes without a welding arc established or there is a direct short between contact tip or wire and the workpiece. Release gun trigger and clear fault condition.

- **Help 5**

Indicates a malfunction in wire feed system and/or drive motor overcurrent condition. Check for proper spool brake adjustment or obstructions in wire feed system. Clean or replace liner, wire guides, or contact tip.

- **Help 6**

Indicates a malfunction in wire feed system and/or external drive motor overcurrent condition (spool gun or push-pull gun). Check for proper spool brake adjustment or obstructions in wire feed system. Clean or replace liner, wire guides, or contact tip.

- **Help 7**

Indicates input voltage malfunction (voltage too high or too low) causing unit to automatically shut down. Turn off input primary power and check input voltage per primary voltage rating of welder. Unit will operate once input voltage is within specification and power to unit is turned off and back on.

- **Help 8**

Indicates open circuit voltage is out of range. Turn off primary input power and contact a Factory Authorized Service Agent.

- **Help 9**

Indicates a malfunction in Pulse MIG function. Check connection between pulse board and user interface board. Replace pulse board, if necessary.

- **Help 10**

Indicates a trigger error when two gun triggers are activated at the same time. Release gun triggers to clear error.

- **Help 11**

Indicates a tach error when tach feedback signal is not present. Release and press gun trigger to reset tach signal. If error continues, contact a Factory Authorized Service Agent.

- **Tip Save**

Indicates contact tip is directly shorted to workpiece. Arc shuts off in this condition, and message resets when tip is not touching workpiece and gun trigger is released.

- **MM 350P**

When unit is turned on, this display indicates that pulse option is installed and operational.

- **MM 350**

When unit is turned on, this display indicates that unit is either a MIG only machine or pulse option is installed but not operational.

- **Jog XXX (Wire Feed Speed)**

Indicates trigger is pressed, but no arc is detected. Wire feed speed goes to Jog wire feed speed after 3 seconds.

8-6. Troubleshooting

Trouble	Remedy
No weld output; wire does not feed.	Be sure line disconnect switch is On (see Section 5-14 or 5-15).
	Replace building line fuse or reset circuit breaker if open (see Section 5-14 or 5-15).
	Secure gun trigger connections (see Section 5-6).
	Have Factory Authorized Service Agent check Power switch.
	Have Factory Authorized Service Agent check all board connections and main control board.
No weld output; wire feeds.	Thermistor RT1 or RT2 open (overheating). Allow fan to run; the unit will be enabled when it has cooled and temperatures are within acceptable limits (see Section 4-5 and 8-2).
	Connect work clamp to get good metal to metal contact.
	Replace contact tip (see gun Owner's Manual).
	Have Factory Authorized Service Agent check main control board and main rectifier.
Low weld output.	Connect unit to proper input voltage or check for low line voltage (see Section 5-14 or 5-15).
	Have Factory Authorized Service Agent check main control board and user interface board.
Low, high, or erratic wire speed.	Readjust front panel settings (see Section 6-1).
	Change to correct size drive rolls (see Section 8-4).
	Readjust drive roll pressure (see Section 5-16).
	Replace inlet guide, contact tip, and/or liner if necessary (see gun Owner's Manual).
	Have Factory Authorized Service Agent check input voltage.
	Have Factory Authorized Service Agent check main control board.
No wire feed.	Turn Wire Speed control to higher setting (see Section 6-1).
	Clear obstruction in gun contact tip or liner (see gun Owner's Manual).
	Readjust drive roll pressure (see Section 5-16).
	Change to correct size drive rolls (see Section 8-4).
	Rethread welding wire (see Section 5-16).
	Check gun trigger and leads. Repair or replace gun if necessary.
	Have Factory Authorized Service Agent check main control board and user interface board.
	H – – message appears on voltmeter and ammeter displays to indicate thermistor RT1 or RT2 is open and unit is in an overheated condition (see Section 8-5).

Notes

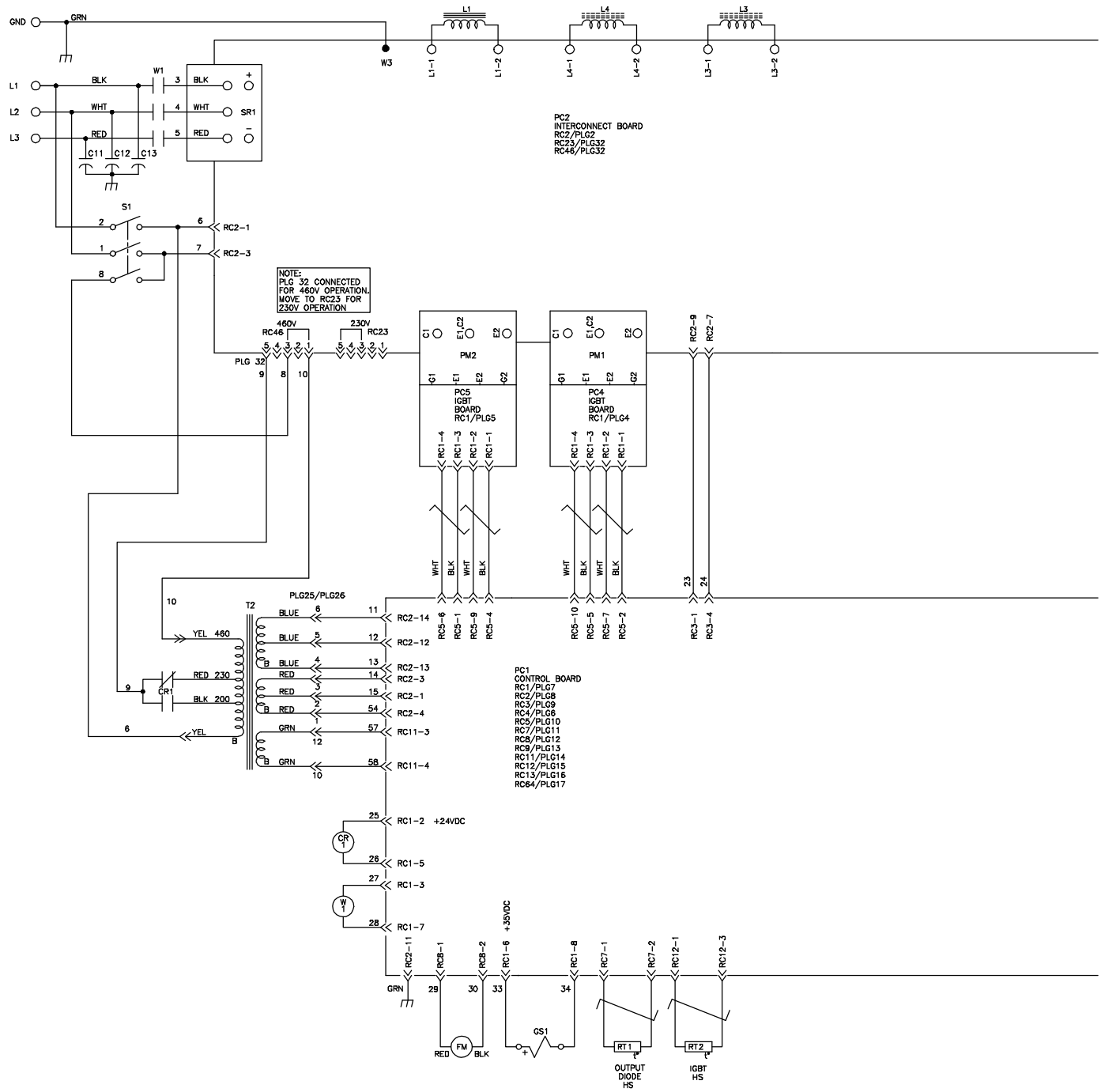

⚠ WARNING	
	• Do not touch live electrical parts. • Disconnect input power or stop engine before servicing. • Do not operate with covers removed. • Have only qualified persons install, use, or service this unit.
ELECTRIC SHOCK HAZARD	

Figure 9-1. Circuit Diagram For Welding Power Source

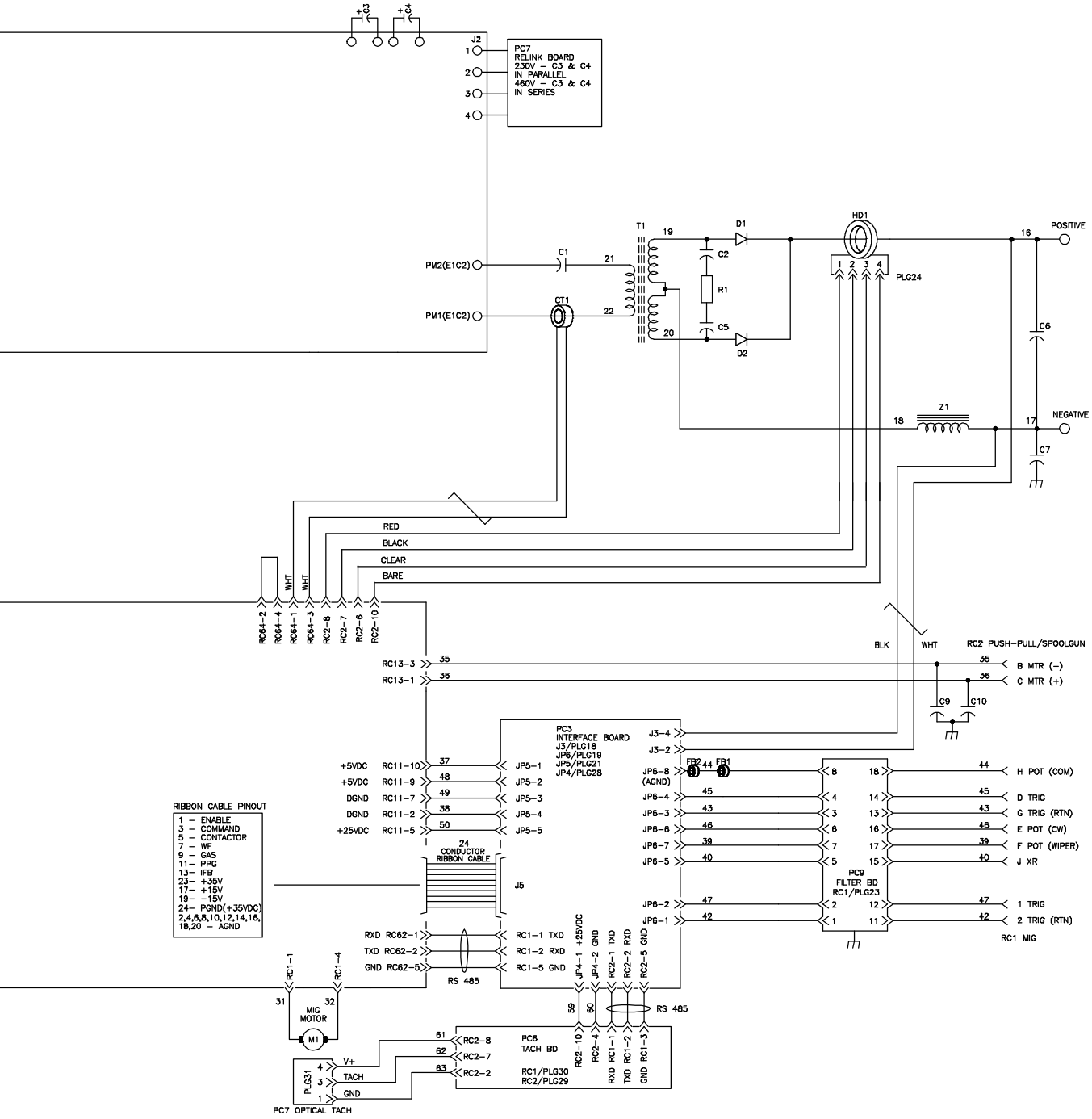
+C3
+C4
J2
PC7
RELINK BOARD
230V – C3 & C4
IN PARALLEL
460V – C3 & C4
IN SERIES
PM2(E1C2)
PM1(E1C2)
C1
CT1
T1
D1
D2
C2
R1
C5
HD1
PLG24
POSITIVE
NEGATIVE
C6
C7
Z1
RED
BLACK
CLEAR
BARE
WHT
RC64-2
RC64-4
RC64-1
RC64-3
RC2-8
RC2-7
RC2-6
RC2-10
RC13-3
RC13-1
BLK
RC2 PUSH-PULL/SPOOLGUN
B MTR (–)
C MTR (+)
C9
C10
PC3
INTERFACE BOARD
J3/PLG18
JP6/PLG19
JP5/PLG21
JP4/PLG28
J3-4
J3-2
FB2
FB1
+5VDC
DGND
+25VDC
RC11-10
RC11-9
RC11-7
RC11-2
RC11-5
JP5-1
JP5-2
JP5-3
JP5-4
JP5-5
JP6-8 (AGND)
JP6-4
JP6-3
JP6-6
JP6-7
JP6-5
JP6-2
JP6-1
H POT (COM)
D TRIG
G TRIG (RTN)
E POT (CW)
F POT (WIPER)
J XR
PC9
FILTER BD
RC1/PLG23
1 TRIG
2 TRIG (RTN)
RC1 MIG
RIBBON CABLE PINOUT
1 – ENABLE
3 – COMMAND
5 – CONTACTOR
7 – WF
9 – GAS
11 – PPG
13 – IFB
23 – +35V
17 – +15V
19 – –15V
24 – PGND(+35VDC)
2,4,6,8,10,12,14,16,
18,20 – AGND
24
CONDUCTOR
RIBBON CABLE
J5
RXD RC62-1
TXD RC62-2
GND RC62-5
RC1-1 TXD
RC1-2 RXD
RC1-5 GND
RS 485
JP4-1 +25VDC
JP4-2 GND
RC2-1 TXD
RC2-2 RXD
RC2-5 GND
RC1-1
RC1-4
MIG
MOTOR
M1
RS 485
PC6
TACH BD
RC2-8
RC2-7
RC2-2
RC1/PLG30
RC2/PLG29
RC2-10
RC2-4
RC1-1
RC1-2
RC1-3
RXD
TXD
GND
PLG31
V+
TACH
GND
PC7 OPTICAL TACH

255726-D

10-1. Drive Roll And Wire Guide Kits

☞ *Base selection of drive rolls upon the following recommended usages:*

1 V-Grooved rolls for hard wire.
2 U-Grooved rolls for soft and soft shelled cored wires.
3 U-Cogged rolls for extremely soft shelled wires (usually hard surfacing types).
4 V-Knurled rolls for hard shelled cored wires.
5 Drive roll types may be mixed to suit particular requirements (e.g. V-Knurled roll in combination with U-Grooved).

Wire Diameter			Kit No.	Drive Roll		Wire Guide	
Fraction	Decimal	Metric		Part No.	Type	Inlet	Intermediate
.023/.025 in	.023/.025 in	0.6 mm	087 132	087 130	V-Grooved	056 192	056 206
.030 in	.030 in	0.8 mm	046 780	053 695	V-Grooved	056 192	056 206
.035 in	.035 in	0.9 mm	046 781	053 700	V-Grooved	056 192	056 206
.045 in	.045 in	1.2 mm	046 782	053 697	V-Grooved	056 193	056 207
.052 in	.052 in	1.3 mm	046 783	053 698	V-Grooved	056 193	056 207
1/16 in	.062 in	1.6 mm	046 784	053 699	V-Grooved	056 195	056 209
.035 in	.035 in	0.9 mm	044 750	072 000	U-Grooved	056 192	056 206
.045 in	.045 in	1.2 mm	046 785	053 701	U-Grooved	056 193	056 207
.052 in	.052 in	1.3 mm	046 786	053 702	U-Grooved	056 193	056 207
1/16 in	.062 in	1.6 mm	046 787	053 706	U-Grooved	056 195	056 209
.035 in	.035 in	0.9 mm	046 792	132 958	V-Knurled	056 192	056 206
.045 in	.045 in	1.2 mm	046 793	132 957	V-Knurled	056 193	056 207
.052 in	.052 in	1.3 mm	046 794	132 956	V-Knurled	056 193	056 207
1/16 in	.062 in	1.6 mm	046 795	132 955	V-Knurled	056 195	056 209

Ref. S-0025-D

☞ *A complete Parts List is available at www.MillerWelds.com*

Warranty Questions?

Call
1-800-4-A-MILLER
for your local
Miller distributor.

Your distributor also gives you ...

Service
You always get the fast, reliable response you need. Most replacement parts can be in your hands in 24 hours.

Support
Need fast answers to the tough welding questions? Contact your distributor. The expertise of the distributor and Miller is there to help you, every step of the way.

TRUE BLUE® WARRANTY

Effective January 1, 2021
(Equipment with a serial number preface of NB or newer)

This limited warranty supersedes all previous Miller warranties and is exclusive with no other guarantees or warranties expressed or implied.

LIMITED WARRANTY – Subject to the terms and conditions below, Miller Electric Mfg. LLC, Appleton, Wisconsin, warrants to authorized distributors that new Miller equipment sold after the effective date of this limited warranty is free of defects in material and workmanship at the time it is shipped by Miller. THIS WARRANTY IS EXPRESSLY IN LIEU OF ALL OTHER WARRANTIES, EXPRESS OR IMPLIED, INCLUDING THE WARRANTIES OF MERCHANTABILITY AND FITNESS.

Within the warranty periods listed below, Miller will repair or replace any warranted parts or components that fail due to such defects in material or workmanship. Miller must be notified in writing within thirty (30) days of such defect or failure, at which time Miller will provide instructions on the warranty claim procedures to be followed. Notifications submitted as online warranty claims must provide detailed descriptions of the fault and troubleshooting steps taken to diagnose failed parts. Warranty claims that lack the required information as defined in the Miller Service Operation Guide (SOG) may be denied by Miller.

Miller shall honor warranty claims on warranted equipment listed below in the event of a defect within the warranty coverage time periods listed below. Warranty time periods start on the delivery date of the equipment to the end-user purchaser, or 12 months after the equipment is shipped to a North American distributor, or 18 months after the equipment is shipped to an international distributor, whichever occurs first.

1. 5 Years Parts — 3 Years Labor
   * Original Main Power Rectifiers Only to Include SCRs, Diodes, and Discrete Rectifier Modules
2. 3 Years — Parts and Labor Unless Specified
   * Auto-Darkening Helmet Lenses (No Labor)
   * Engine Driven Welder/Generators **(NOTE: Engines are Warranted Separately by the Engine Manufacturer.)**
   * Insight Welding Intelligence Products (Except External Sensors)
   * Inverter Power Sources
   * Plasma Arc Cutting Power Sources
   * Process Controllers
   * Semi-Automatic and Automatic Wire Feeders
   * Transformer/Rectifier Power Sources
3. 2 Years — Parts and Labor
   * Auto-Darkening Weld Masks (No Labor)
   * Fume Extractors – Capture 5, Filtair 400 and Industrial Collector Series
4. 1 Year — Parts and Labor Unless Specified
   * ArcReach Heater
   * AugmentedArc and LiveArc Welding Systems
   * Automatic Motion Devices
   * Bernard BTB Air-Cooled MIG Guns (No Labor)
   * CoolBelt (No Labor)
   * Desiccant Air Dryer System
   * Field Options **(NOTE: Field options are covered for the remaining warranty period of the product they are installed in, or for a minimum of one year — whichever is greater.)**
   * RFCS Foot Controls (Except RFCS-RJ45)
   * Fume Extractors – Filtair 130, MWX and SWX Series, ZoneFlow Extraction Arms and Motor Control Box
   * HF Units
   * ICE/XT Plasma Cutting Torches (No Labor)
   * Induction Heating Power Sources, Coolers **(NOTE: Digital Recorders are Warranted Separately by the Manufacturer.)**
   * Load Banks
   * Motor-Driven Guns (except Spoolmate Spoolguns)
   * PAPR Blower Unit (No Labor)
   * Positioners and Controllers
   * Racks (For Housing Multiple Power Sources)
   * Running Gear/Trailers
   * Subarc Wire Drive Assemblies
   * Supplied Air Respirator (SAR) Boxes and Panels
   * TIG Torches (No Labor)
   * Tregaskiss Guns (No Labor)
   * Water Cooling Systems
   * Wireless Remote Foot/Hand Controls and Receivers
   * Work Stations/Weld Tables (No Labor)
5. 6 Months — Parts
   * 12 Volt Automotive-Style Batteries
6. 90 Days — Parts
   * Accessories (Kits)
   * ArcReach Heater Quick Wrap and Air Cooled Cables
   * Canvas Covers
   * Induction Heating Coils and Blankets, Cables, and Non-Electronic Controls
   * MDX Series MIG Guns
   * M-Guns
   * MIG Guns, Subarc (SAW) Torches, and External Cladding Heads
   * Remote Controls and RFCS-RJ45
   * Replacement Parts (No labor)
   * Spoolmate Spoolguns

Miller's True Blue® Limited Warranty shall not apply to:

1. **Consumable components; such as contact tips, cutting nozzles, contactors, brushes, relays, work station table tops and welding curtains, or parts that fail due to normal wear. (Exception: brushes and relays are covered on all engine-driven products.)**
2. Items furnished by Miller, but manufactured by others, such as engines or trade accessories. These items are covered by the manufacturer's warranty, if any.
3. Equipment that has been modified by any party other than Miller, or equipment that has been improperly installed, improperly operated or misused based upon industry standards, or equipment which has not had reasonable and necessary maintenance, or equipment which has been used for operation outside of the specifications for the equipment.
4. Defects caused by accident, unauthorized repair, or improper testing.

MILLER PRODUCTS ARE INTENDED FOR COMMERCIAL AND INDUSTRIAL USERS TRAINED AND EXPERIENCED IN THE USE AND MAINTENANCE OF WELDING EQUIPMENT.

The exclusive remedies for warranty claims are, at Miller's option, either: (1) repair; or (2) replacement; or, if approved in writing by Miller, (3) the pre-approved cost of repair or replacement at an authorized Miller service station; or (4) payment of or credit for the purchase price (less reasonable depreciation based upon use). Products may not be returned without Miller's written approval. Return shipment shall be at customer's risk and expense.

The above remedies are F.O.B. Appleton, WI, or Miller's authorized service facility. Transportation and freight are the customer's responsibility. TO THE EXTENT PERMITTED BY LAW, THE REMEDIES HEREIN ARE THE SOLE AND EXCLUSIVE REMEDIES REGARDLESS OF THE LEGAL THEORY. IN NO EVENT SHALL MILLER BE LIABLE FOR DIRECT, INDIRECT, SPECIAL, INCIDENTAL OR CONSEQUENTIAL DAMAGES (INCLUDING LOSS OF PROFIT) REGARDLESS OF THE LEGAL THEORY. ANY WARRANTY NOT PROVIDED HEREIN AND ANY IMPLIED WARRANTY, GUARANTY, OR REPRESENTATION, INCLUDING ANY IMPLIED WARRANTY OF MERCHANTABILITY OR FITNESS FOR PARTICULAR PURPOSE, ARE EXCLUDED AND DISCLAIMED BY MILLER.

Some US states do not allow limiting the duration of an implied warranty or the exclusion of certain damages, so the above limitations may not apply to you. This warranty provides specific legal rights, and other rights may be available depending on your state. In Canada, some provinces provide additional warranties or remedies, and to the extent the law prohibits their waiver, the limitations set out above may not apply. This Limited Warranty provides specific legal rights, and other rights may be available, but may vary by province.

Owner's Record

Please complete and retain with your personal records.

Model Name Serial/Style Number

Purchase Date (Date which equipment was delivered to original customer.)

Distributor

Address

City

State Zip

Register your product at www.millerwelds.com/support/product–registration

For Service

Contact a DISTRIBUTOR or SERVICE AGENCY near you.

Always provide Model Name and Serial/Style Number.

Contact your Distributor for:

- Welding Supplies and Consumables
- Options and Accessories
- Personal Protective Equipment (PPE)
- Service and Repair
- Replacement Parts
- Training (Schools, Videos, Books)
- Welding Process Handbooks

To locate a Distributor or Service Agency visit www.millerwelds.com or call 1-800-4-A-Miller

Contact the Delivering Carrier to:

File a claim for loss or damage during shipment.

For assistance in filing or settling claims, contact your distributor and/or equipment manufacturer's Transportation Department.

Miller Electric Mfg. LLC
An Illinois Tool Works Company
1635 West Spencer Street
Appleton, WI 54914 USA

International Headquarters–USA
USA Phone: 920-735-4505 Auto-Attended
USA & Canada FAX: 920-735-4134
International FAX: 920-735-4125

For International Locations Visit
www.MillerWelds.com

© 2021 Miller Electric Mfg. LLC

2021–01