OM-4426 215 348AE

2012–06

Processes

MIG (GMAW) Welding

Flux Cored (FCAW)

Stick (SMAW) Welding

TIG (GTAW) Welding

Air Plasma Cutting and Gouging with Spectrum® Unit

Air Carbon Arc (CAC-A) Cutting and Gouging

Description

Engine Driven Welding Generator
(AC Available On AC/DC Models Only)

Trailblazer® 302
Trailblazer® 275 DC

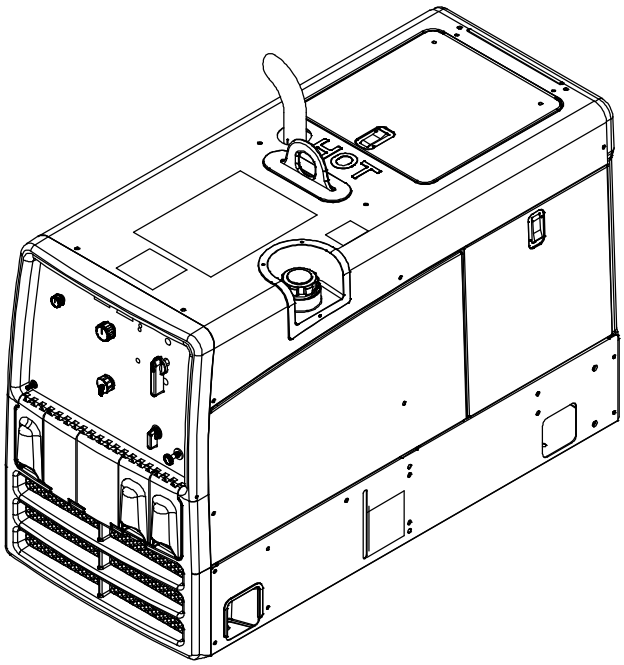

OWNER'S MANUAL

File: Engine Drive

Visit our website at

www.MillerWelds.com

From Miller to You

Thank you and *congratulations* on choosing Miller. Now you can get the job done and get it done right. We know you don't have time to do it any other way.

That's why when Niels Miller first started building arc welders in 1929, he made sure his products offered long-lasting value and superior quality. Like you, his customers couldn't afford anything less. Miller products had to be more than the best they could be. They had to be the best you could buy.

Today, the people that build and sell Miller products continue the tradition. They're just as committed to providing equipment and service that meets the high standards of quality and value established in 1929.

This Owner's Manual is designed to help you get the most out of your Miller products. Please take time to read the Safety precautions. They will help you protect yourself against potential hazards on the worksite. We've made installation and operation quick and easy. With Miller you can count on years of reliable service with proper maintenance. And if for some reason the unit needs repair, there's a Troubleshooting section that will help you figure out what the problem is. The parts list will then help you to decide the exact part you may need to fix the problem. Warranty and service information for your particular model are also provided.

ISO 9001 REGISTERED QUALITY SYSTEM

Miller is the first welding equipment manufacturer in the U.S.A. to be registered to the ISO 9001 Quality System Standard.

TRUE BLUE® WARRANTY

Working as hard as you do – every power source from Miller is backed by the most hassle-free warranty in the business.

Miller Electric manufactures a full line of welders and welding related equipment. For information on other quality Miller products, contact your local Miller distributor to receive the latest full line catalog or individual specification sheets. **To locate your nearest distributor or service agency call 1-800-4-A-Miller, or visit us at www.MillerWelds.com on the web.**

Miller®

TABLE OF CONTENTS

SECTION 1 – SAFETY PRECAUTIONS – READ BEFORE USING 1
1-1. Symbol Usage 1
1-2. Arc Welding Hazards 1
1-3. Engine Hazards 3
1-4. Compressed Air Hazards 3
1-5. Additional Symbols For Installation, Operation, And Maintenance 4
1-6. California Proposition 65 Warnings 6
1-7. Principal Safety Standards 6
1-8. EMF Information 6
SECTION 2 – CONSIGNES DE SÉCURITÉ – LIRE AVANT UTILISATION 7
2-1. Signification des symboles 7
2-2. Dangers relatifs au soudage à l'arc 7
2-3. Dangers existant en relation avec le moteur 9
2-4. Dangers liés à l'air comprimé 10
2-5. Dangers supplémentaires en relation avec l'installation, le fonctionnement et la maintenance 11
2-6. Proposition californienne 65 Avertissements 13
2-7. Principales normes de sécurité 13
2-8. Informations relatives aux CEM 13
SECTION 3 – DEFINITIONS 14
3-1. Symbol Definitions 14
SECTION 4 – SPECIFICATIONS 15
4-1. Weld, Power, And Carbureted Engine Specifications (Subaru EH65, Kohler CH-23) 15
4-2. Weld, Power, And EFI Engine Specifications (Kohler ECH-730) 15
4-3. Dimensions, Weights, And Operating Angles 16
4-4. Fuel Consumption Curves 17
4-5. Generator Power Curve 18
4-6. Duty Cycle 18
4-7. Stick And MIG Mode Volt-Ampere Curves 19
4-8. TIG Mode Volt-Ampere Curves 20
SECTION 5 – INSTALLATION 21
5-1. Serial Number And Rating Label Location 21
5-2. Installing Welding Generator 21
5-3. Grounding Generator To Truck Or Trailer Frame 22
5-4. Installing Exhaust Pipe 22
5-5. Engine Prestart Checks (Kohler-Powered Units) 23
5-6. Engine Prestart Checks (Subaru-Powered Units) 24
5-7. Connecting Or Replacing The Battery 25
5-8. Electronic Fuel Injection (EFI) System And Battery Information 25
5-9. Weld Output Terminals 26
5-10. Connecting To Weld Output Terminals 27
5-11. Selecting Weld Cable Sizes* 27
5-12. Remote Receptacle Information 28
SECTION 6 – OPERATING WELDING GENERATOR 29
6-1. Front Panel Controls (See Section 6-2) 29
6-2. Description Of Front Panel Controls (See Section 6-1) 30
6-3. Cold Weather Engine Operation 30

TABLE OF CONTENTS

6-4. Process/Contactor Switch On AC/DC Models 31
6-5. Stick Start Procedure – Scratch Start Technique 32
6-6. Lift-Arc™ TIG With Auto-Crater™ And Auto-Stop™ 33
6-7. Remote Voltage/Amperage Control 34
SECTION 7 – OPERATING AUXILIARY EQUIPMENT 35
7-1. Generator Power Receptacles And Supplementary Protectors 35
7-2. Optional GFCI Receptacles 36
7-3. GFCI Receptacle Information, Resetting And Testing 37
7-4. Simultaneous Weld And Power 38
7-5. Wiring Instructions For Optional 240 Volt, Single-Phase Plug (NEMA 14-50P) 38
SECTION 8 – MAINTENANCE & TROUBLESHOOTING 39
8-1. Maintenance Label 39
8-2. Routine Maintenance 40
8-3. Electronic Fuel Injection (EFI) System And Servicing Information 40
8-4. Servicing Optional Spark Arrestor 41
8-5. Servicing Air Cleaner 41
8-6. Changing Engine Oil, Oil Filter, And Fuel Filter (Kohler-Powered Units) 42
8-7. Changing Engine Oil, Oil Filter, and Fuel Filter (Subaru-Powered Units) 43
8-8. Adjusting Engine Speed (Kohler Carbureted Units [CH-23]) 44
8-9. Adjusting Engine Speed (Kohler EFI Units [ECH-730]) 45
8-10. Adjusting Engine Speed (Subaru-Powered Units) 46
8-11. Overload Protection 47
8-12. Welding Troubleshooting 48
8-13. Generator Power Troubleshooting 49
8-14. Engine Troubleshooting 49
SECTION 9 – PARTS LIST 51
9-1. Recommended Spare Parts 51
SECTION 10 – ELECTRICAL DIAGRAMS 52
SECTION 11 – GENERATOR POWER GUIDELINES 56
WARRANTY

SECTION 1 – SAFETY PRECAUTIONS – READ BEFORE USING

rom_2011–10

Protect yourself and others from injury — read, follow, and save these important safety precautions and operating instructions.

1-1. Symbol Usage

DANGER! – Indicates a hazardous situation which, if not avoided, will result in death or serious injury. The possible hazards are shown in the adjoining symbols or explained in the text.

Indicates a hazardous situation which, if not avoided, could result in death or serious injury. The possible hazards are shown in the adjoining symbols or explained in the text.

NOTICE *– Indicates statements not related to personal injury.*

☞ *Indicates special instructions.*

This group of symbols means Warning! Watch Out! ELECTRIC SHOCK, MOVING PARTS, and HOT PARTS hazards. Consult symbols and related instructions below for necessary actions to avoid the hazards.

1-2. Arc Welding Hazards

The symbols shown below are used throughout this manual to call attention to and identify possible hazards. When you see the symbol, watch out, and follow the related instructions to avoid the hazard. The safety information given below is only a summary of the more complete safety information found in the Safety Standards listed in Section 1-7. Read and follow all Safety Standards.

Only qualified persons should install, operate, maintain, and repair this unit.

During operation, keep everybody, especially children, away.

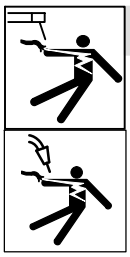

ELECTRIC SHOCK can kill.

Touching live electrical parts can cause fatal shocks or severe burns. The electrode and work circuit is electrically live whenever the output is on. The input power circuit and machine internal circuits are also live when power is on. In semiautomatic or automatic wire welding, the wire, wire reel, drive roll housing, and all metal parts touching the welding wire are electrically live. Incorrectly installed or improperly grounded equipment is a hazard.

- Do not touch live electrical parts.
- Wear dry, hole-free insulating gloves and body protection.
- Insulate yourself from work and ground using dry insulating mats or covers big enough to prevent any physical contact with the work or ground.
- Do not use AC output in damp areas, if movement is confined, or if there is a danger of falling.
- Use AC output ONLY if required for the welding process.
- If AC output is required, use remote output control if present on unit.
- Additional safety precautions are required when any of the following electrically hazardous conditions are present: in damp locations or while wearing wet clothing; on metal structures such as floors, gratings, or scaffolds; when in cramped positions such as sitting, kneeling, or lying; or when there is a high risk of unavoidable or accidental contact with the workpiece or ground. For these conditions, use the following equipment in order presented: 1) a semiautomatic DC constant voltage (wire) welder, 2) a DC manual (stick) welder, or 3) an AC welder with reduced open-circuit voltage. In most situations, use of a DC, constant voltage wire welder is recommended. And, do not work alone!
- Disconnect input power or stop engine before installing or servicing this equipment. Lockout/tagout input power according to OSHA 29 CFR 1910.147 (see Safety Standards).
- Properly install, ground, and operate this equipment according to its Owner's Manual and national, state, and local codes.
- Always verify the supply ground — check and be sure that input power cord ground wire is properly connected to ground terminal in disconnect box or that cord plug is connected to a properly grounded receptacle outlet.
- When making input connections, attach proper grounding conductor first – double-check connections.
- Keep cords dry, free of oil and grease, and protected from hot metal and sparks.
- Frequently inspect input power cord for damage or bare wiring — replace cord immediately if damaged — bare wiring can kill.
- Turn off all equipment when not in use.
- Do not use worn, damaged, undersized, or poorly spliced cables.
- Do not drape cables over your body.
- If earth grounding of the workpiece is required, ground it directly with a separate cable.
- Do not touch electrode if you are in contact with the work, ground, or another electrode from a different machine.
- Use only well-maintained equipment. Repair or replace damaged parts at once. Maintain unit according to manual.
- Do not touch electrode holders connected to two welding machines at the same time since double open-circuit voltage will be present.
- Wear a safety harness if working above floor level.
- Keep all panels and covers securely in place.
- Clamp work cable with good metal-to-metal contact to workpiece or worktable as near the weld as practical.
- Insulate work clamp when not connected to workpiece to prevent contact with any metal object.
- Do not connect more than one electrode or work cable to any single weld output terminal. Disconnect cable for process not in use.

SIGNIFICANT DC VOLTAGE exists in inverter power sources AFTER stopping engine.

- Stop engine on inverter and discharge input capacitors according to instructions in Maintenance Section before touching any parts.

HOT PARTS can burn.

- Do not touch hot parts bare handed.
- Allow cooling period before working on equipment.
- To handle hot parts, use proper tools and/or wear heavy, insulated welding gloves and clothing to prevent burns.

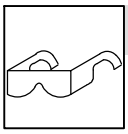

FLYING METAL or DIRT can injure eyes.

- Welding, chipping, wire brushing, and grinding cause sparks and flying metal. As welds cool, they can throw off slag.
- Wear approved safety glasses with side shields even under your welding helmet.

FUMES AND GASES can be hazardous.

Welding produces fumes and gases. Breathing these fumes and gases can be hazardous to your health.

- Keep your head out of the fumes. Do not breathe the fumes.
- If inside, ventilate the area and/or use local forced ventilation at the arc to remove welding fumes and gases.
- If ventilation is poor, wear an approved air-supplied respirator.
- Read and understand the Material Safety Data Sheets (MSDSs) and the manufacturer's instructions for metals, consumables, coatings, cleaners, and degreasers.
- Work in a confined space only if it is well ventilated, or while wearing an air-supplied respirator. Always have a trained watchperson nearby. Welding fumes and gases can displace air and lower the oxygen level causing injury or death. Be sure the breathing air is safe.
- Do not weld in locations near degreasing, cleaning, or spraying operations. The heat and rays of the arc can react with vapors to form highly toxic and irritating gases.
- Do not weld on coated metals, such as galvanized, lead, or cadmium plated steel, unless the coating is removed from the weld area, the area is well ventilated, and while wearing an air-supplied respirator. The coatings and any metals containing these elements can give off toxic fumes if welded.

BUILDUP OF GAS can injure or kill.

- Shut off compressed gas supply when not in use.
- Always ventilate confined spaces or use approved air-supplied respirator.

ARC RAYS can burn eyes and skin.

Arc rays from the welding process produce intense visible and invisible (ultraviolet and infrared) rays that can burn eyes and skin. Sparks fly off from the weld.

- Wear an approved welding helmet fitted with a proper shade of filter lenses to protect your face and eyes from arc rays and sparks when welding or watching (see ANSI Z49.1 and Z87.1 listed in Safety Standards).
- Wear approved safety glasses with side shields under your helmet.
- Use protective screens or barriers to protect others from flash, glare, and sparks; warn others not to watch the arc.
- Wear protective clothing made from durable, flame-resistant material (leather, heavy cotton, or wool) and foot protection.

WELDING can cause fire or explosion.

Welding on closed containers, such as tanks, drums, or pipes, can cause them to blow up. Sparks can fly off from the welding arc. The flying sparks, hot workpiece, and hot equipment can cause fires and burns. Accidental contact of electrode to metal objects can cause sparks, explosion, overheating, or fire. Check and be sure the area is safe before doing any welding.

- Remove all flammables within 35 ft (10.7 m) of the welding arc. If this is not possible, tightly cover them with approved covers.
- Do not weld where flying sparks can strike flammable material.
- Protect yourself and others from flying sparks and hot metal.
- Be alert that welding sparks and hot materials from welding can easily go through small cracks and openings to adjacent areas.
- Watch for fire, and keep a fire extinguisher nearby.
- Be aware that welding on a ceiling, floor, bulkhead, or partition can cause fire on the hidden side.
- Do not weld on containers that have held combustibles, or on closed containers such as tanks, drums, or pipes unless they are properly prepared according to AWS F4.1 and AWS A6.0 (see Safety Standards).
- Do not weld where the atmosphere may contain flammable dust, gas, or liquid vapors (such as gasoline).
- Connect work cable to the work as close to the welding area as practical to prevent welding current from traveling long, possibly unknown paths and causing electric shock, sparks, and fire hazards.
- Do not use welder to thaw frozen pipes.
- Remove stick electrode from holder or cut off welding wire at contact tip when not in use.
- Wear oil-free protective garments such as leather gloves, heavy shirt, cuffless trousers, high shoes, and a cap.
- Remove any combustibles, such as a butane lighter or matches, from your person before doing any welding.
- After completion of work, inspect area to ensure it is free of sparks, glowing embers, and flames.
- Use only correct fuses or circuit breakers. Do not oversize or bypass them.
- Follow requirements in OSHA 1910.252 (a) (2) (iv) and NFPA 51B for hot work and have a fire watcher and extinguisher nearby.

NOISE can damage hearing.

Noise from some processes or equipment can damage hearing.

- Wear approved ear protection if noise level is high.

ELECTRIC AND MAGNETIC FIELDS (EMF) can affect Implanted Medical Devices.

- Wearers of Pacemakers and other Implanted Medical Devices should keep away.
- Implanted Medical Device wearers should consult their doctor and the device manufacturer before going near arc welding, spot welding, gouging, plasma arc cutting, or induction heating operations.

CYLINDERS can explode if damaged.

Compressed gas cylinders contain gas under high pressure. If damaged, a cylinder can explode. Since gas cylinders are normally part of the welding process, be sure to treat them carefully.

- Protect compressed gas cylinders from excessive heat, mechanical shocks, physical damage, slag, open flames, sparks, and arcs.
- Install cylinders in an upright position by securing to a stationary support or cylinder rack to prevent falling or tipping.
- Keep cylinders away from any welding or other electrical circuits.
- Never drape a welding torch over a gas cylinder.
- Never allow a welding electrode to touch any cylinder.
- Never weld on a pressurized cylinder — explosion will result.
- Use only correct compressed gas cylinders, regulators, hoses, and fittings designed for the specific application; maintain them and associated parts in good condition.
- Turn face away from valve outlet when opening cylinder valve.
- Keep protective cap in place over valve except when cylinder is in use or connected for use.
- Use the right equipment, correct procedures, and sufficient number of persons to lift and move cylinders.
- Read and follow instructions on compressed gas cylinders, associated equipment, and Compressed Gas Association (CGA) publication P-1 listed in Safety Standards.

1-3. Engine Hazards

BATTERY EXPLOSION can injure.

- Always wear a face shield, rubber gloves, and protective clothing when working on a battery.
- Stop engine before disconnecting or connecting battery cables, battery charging cables (if applicable), or servicing battery.
- Do not allow tools to cause sparks when working on a battery.
- Do not use welder to charge batteries or jump start vehicles unless the unit has a battery charging feature designed for this purpose.
- Observe correct polarity (+ and –) on batteries.
- Disconnect negative (–) cable first and connect it last.
- Keep sparks, flames, cigarettes, and other ignition sources away from batteries. Batteries produce explosive gases during normal operation and when being charged.
- Follow battery manufacturer's instructions when working on or near a battery.

FUEL can cause fire or explosion.

- Stop engine and let it cool off before checking or adding fuel.
- Do not add fuel while smoking or if unit is near any sparks or open flames.
- Do not overfill tank — allow room for fuel to expand.
- Do not spill fuel. If fuel is spilled, clean up before starting engine.
- Dispose of rags in a fireproof container.
- Always keep nozzle in contact with tank when fueling.

MOVING PARTS can injure.

- Keep away from moving parts such as fans, belts, and rotors.
- Keep all doors, panels, covers, and guards closed and securely in place.
- Stop engine before installing or connecting unit.
- Have only qualified persons remove doors, panels, covers, or guards for maintenance and troubleshooting as necessary.
- To prevent accidental starting during servicing, disconnect negative (–) battery cable from battery.
- Keep hands, hair, loose clothing, and tools away from moving parts.
- Reinstall doors, panels, covers, or guards when servicing is finished and before starting engine.
- Before working on generator, remove spark plugs or injectors to keep engine from kicking back or starting.
- Block flywheel so that it will not turn while working on generator components.

EXHAUST SPARKS can cause fire.

- Do not let engine exhaust sparks cause fire.
- Use approved engine exhaust spark arrestor in required areas — see applicable codes.

HOT PARTS can burn.

- Do not touch hot parts bare handed.
- Allow cooling period before working on equipment.
- To handle hot parts, use proper tools and/or wear heavy, insulated welding gloves and clothing to prevent burns.

STEAM AND HOT COOLANT can burn.

- If possible, check coolant level when engine is cold to avoid scalding.
- Always check coolant level at overflow tank, if present on unit, instead of radiator (unless told otherwise in maintenance section or engine manual).
- If the engine is warm, checking is needed, and there is no overflow tank, follow the next two statements.
- Wear safety glasses and gloves and put a rag over radiator cap.
- Turn cap slightly and let pressure escape slowly before completely removing cap.

Using a generator indoors CAN KILL YOU IN MINUTES.

- Generator exhaust contains carbon monoxide. This is a poison you cannot see or smell.
- NEVER use inside a home or garage, EVEN IF doors and windows are open.
- Only use OUTSIDE and far away from windows, doors, and vents.

BATTERY ACID can BURN SKIN and EYES.

- Do not tip battery.
- Replace damaged battery.
- Flush eyes and skin immediately with water.

ENGINE HEAT can cause fire.

- Do not locate unit on, over, or near combustible surfaces or flammables.
- Keep exhaust and exhaust pipes way from flammables.

1-4. Compressed Air Hazards

COMPRESSED AIR EQUIPMENT can injure or kill.

- Incorrect installation or operation of this unit could result in equipment failure and personal injury. Only qualified persons should install, operate, and service this unit according to its Owner's Manual, industry standards, and national, state, and local codes.
- Do not exceed the rated output or capacity of the compressor or any equipment in the compressed air system. Design compressed air system so failure of any component will not put people or property at risk.
- Before working on compressed air system, turn off and lockout/tagout unit, release pressure, and be sure air pressure cannot be accidentally applied.
- Do not work on compressed air system with unit running unless you are a qualified person and following the manufacturer's instructions.
- Do not modify or alter compressor or manufacturer-supplied equipment. Do not disconnect, disable, or override any safety equipment in the compressed air system.
- Use only components and accessories approved by the manufacturer.
- Keep away from potential pinch points or crush points created by equipment connected to the compressed air system.
- Do not work under or around any equipment that is supported only by air pressure. Properly support equipment by mechanical means.

HOT METAL from air arc cutting and gouging can cause fire or explosion.

- Do not cut or gouge near flammables.
- Watch for fire; keep extinguisher nearby.

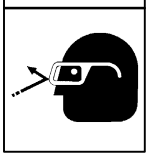

COMPRESSED AIR can injure or kill.

- Before working on compressed air system, turn off and lockout/tagout unit, release pressure, and be sure air pressure cannot be accidentally applied.
- Relieve pressure before disconnecting or connecting air lines.
- Check compressed air system components and all connections and hoses for damage, leaks, and wear before operating unit.
- Do not direct air stream toward self or others.
- Wear protective equipment such as safety glasses, hearing protection, leather gloves, heavy shirt and trousers, high shoes, and a cap when working on compressed air system.
- Use soapy water or an ultrasonic detector to search for leaks––never use bare hands. Do not use equipment if leaks are found.
- Reinstall doors, panels, covers, or guards when servicing is finished and before starting unit.
- If ANY air is injected into the skin or body seek medical help immediately.

BREATHING COMPRESSED AIR can injure or kill.

- Do not use compressed air for breathing.
- Use only for cutting, gouging, and tools.

TRAPPED AIR PRESSURE AND WHIPPING HOSES can injure.

- Release air pressure from tools and system before servicing, adding or changing attachments, or opening compressor oil drain or oil fill cap.

MOVING PARTS can injure.

- Keep away from moving parts such as fans, belts and rotors.
- Keep all doors, panels, covers, and guards closed and securely in place.
- Keep hands, hair, loose clothing, and tools away from moving parts.
- Before working on compressed air system, turn off and lockout/tagout unit, release pressure, and be sure air pressure cannot be accidentally applied.
- Have only qualified people remove guards or covers for maintenance and troubleshooting as necessary.
- Reinstall doors, panels, covers, or guards when servicing is finished and before starting engine.

HOT PARTS can burn.

- Do not touch hot compressor or air system parts.
- Allow cooling period before working on equipment.
- To handle hot parts, use proper tools and/or wear heavy, insulated welding gloves and clothing to prevent burns.

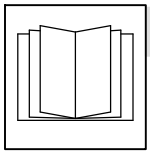

READ INSTRUCTIONS.

- Read and follow all labels and the Owner's Manual carefully before installing, operating, or servicing unit. Read the safety information at the beginning of the manual and in each section.
- Use only genuine replacement parts from the manufacturer.
- Perform maintenance and service according to the Owner's Manuals, industry standards, and national, state, and local codes.

1-5. Additional Symbols For Installation, Operation, And Maintenance

FIRE OR EXPLOSION hazard.

- Do not install or place unit on, over, or near combustible surfaces.
- Do not install unit near flammables.
- Do not overload building wiring – be sure power supply system is properly sized, rated, and protected to handle this unit.

FALLING EQUIPMENT can injure.

- Use lifting eye to lift unit and properly installed accessories only, NOT gas cylinders. Do not exceed maximum lift eye weight rating (see Specifications).
- Use equipment of adequate capacity to lift and support unit.
- If using lift forks to move unit, be sure forks are long enough to extend beyond opposite side of unit.
- Keep equipment (cables and cords) away from moving vehicles when working from an aerial location.
- Follow the guidelines in the Applications Manual for the Revised NIOSH Lifting Equation (Publication No. 94–110) when manually lifting heavy parts or equipment.

OVERHEATING can damage motors.

- Turn off or unplug equipment before starting or stopping engine.
- Do not let low voltage and frequency caused by low engine speed damage electric motors.
- Do not connect 50 or 60 Hertz motors to the 100 Hertz receptacle where applicable.

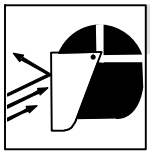

FLYING SPARKS can injure.

- Wear a face shield to protect eyes and face.
- Shape tungsten electrode only on grinder with proper guards in a safe location wearing proper face, hand, and body protection.
- Sparks can cause fires — keep flammables away.

MOVING PARTS can injure.

- Keep away from moving parts.
- Keep away from pinch points such as drive rolls.

BATTERY CHARGING OUTPUT and BATTERY EXPLOSION can injure.

Battery charging not present on all models.

- Always wear a face shield, rubber gloves, and protective clothing when working on a battery.
- Stop engine before disconnecting or connecting battery cables, battery charging cables (if applicable), or servicing battery.
- Do not allow tools to cause sparks when working on a battery.
- Do not use welder to charge batteries or jump start vehicles unless it has a battery charging feature designed for this purpose.
- Observe correct polarity (+ and –) on batteries.
- Disconnect negative (–) cable first and connect it last.
- Keep sparks, flames, cigarettes, and other ignition sources away from batteries. Batteries produce explosive gases during normal operation and when being charged.
- Follow battery manufacturer's instructions when working on or near a battery.
- Have only qualified persons do battery charging work.
- If battery is being removed from a vehicle for charging, disconnect negative (–) cable first and connect it last. To prevent an arc, make sure all accessories are off.
- Charge lead-acid batteries only. Do not use battery charger to supply power to an extra-low-voltage electrical system or to charge dry cell batteries.
- Do not charge a frozen battery.
- Do not use damaged charging cables.
- Do not charge batteries in a closed area or where ventilation is restricted.
- Do not charge a battery that has loose terminals or one showing damage such as a cracked case or cover.
- Before charging battery, select correct charger voltage to match battery voltage.
- Set battery charging controls to the Off position before connecting to battery. Do not allow battery charging clips to touch each other.
- Keep charging cables away from vehicle hood, door, or moving parts.

WELDING WIRE can injure.

- Do not press gun trigger until instructed to do so.
- Do not point gun toward any part of the body, other people, or any metal when threading welding wire.

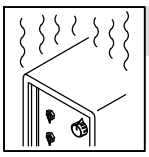

OVERUSE can cause OVERHEATING.

- Allow cooling period; follow rated duty cycle.
- Reduce current or reduce duty cycle before starting to weld again.
- Do not block or filter airflow to unit.

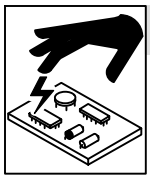

STATIC (ESD) can damage PC boards.

- Put on grounded wrist strap BEFORE handling boards or parts.
- Use proper static-proof bags and boxes to store, move, or ship PC boards.

TILTING OF TRAILER can injure.

- Use tongue jack or blocks to support weight.
- Properly install welding generator onto trailer according to instructions supplied with trailer.

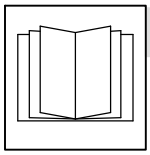

READ INSTRUCTIONS.

- Read and follow all labels and the Owner's Manual carefully before installing, operating, or servicing unit. Read the safety information at the beginning of the manual and in each section.
- Use only genuine replacement parts from the manufacturer.
- Perform maintenance and service according to the Owner's Manuals, industry standards, and national, state, and local codes.

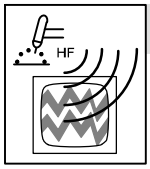

H.F. RADIATION can cause interference.

- High-frequency (H.F.) can interfere with radio navigation, safety services, computers, and communications equipment.
- Have only qualified persons familiar with electronic equipment perform this installation.
- The user is responsible for having a qualified electrician promptly correct any interference problem resulting from the installation.
- If notified by the FCC about interference, stop using the equipment at once.
- Have the installation regularly checked and maintained.
- Keep high-frequency source doors and panels tightly shut, keep spark gaps at correct setting, and use grounding and shielding to minimize the possibility of interference.

ARC WELDING can cause interference.

- Electromagnetic energy can interfere with sensitive electronic equipment such as microprocessors, computers, and computer-driven equipment such as robots.
- Be sure all equipment in the welding area is electromagnetically compatible.
- To reduce possible interference, keep weld cables as short as possible, close together, and down low, such as on the floor.
- Locate welding operation 100 meters from any sensitive electronic equipment.
- Be sure this welding machine is installed and grounded according to this manual.
- If interference still occurs, the user must take extra measures such as moving the welding machine, using shielded cables, using line filters, or shielding the work area.

1-6. California Proposition 65 Warnings

Welding or cutting equipment produces fumes or gases which contain chemicals known to the State of California to cause birth defects and, in some cases, cancer. (California Health & Safety Code Section 25249.5 et seq.)

Battery posts, terminals and related accessories contain lead and lead compounds, chemicals known to the State of California to cause cancer and birth defects or other reproductive harm. *Wash hands after handling.*

This product contains chemicals, including lead, known to the state of California to cause cancer, birth defects, or other reproductive harm. *Wash hands after use.*

For Gasoline Engines:

Engine exhaust contains chemicals known to the State of California to cause cancer, birth defects, or other reproductive harm.

For Diesel Engines:

Diesel engine exhaust and some of its constituents are known to the State of California to cause cancer, birth defects, and other reproductive harm.

1-7. Principal Safety Standards

Safety in Welding, Cutting, and Allied Processes, ANSI Standard Z49.1, is available as a free download from the American Welding Society at http://www.aws.org or purchased from Global Engineering Documents (phone: 1-877-413-5184, website: www.global.ihs.com).

Safe Practices for the Preparation of Containers and Piping for Welding and Cutting, American Welding Society Standard AWS F4.1, from Global Engineering Documents (phone: 1-877-413-5184, website: www.global.ihs.com).

Safe Practices for Welding and Cutting Containers that have Held Combustibles, American Welding Society Standard AWS A6.0, from Global Engineering Documents (phone: 1-877-413-5184, website: www.global.ihs.com).

National Electrical Code, NFPA Standard 70, from National Fire Protection Association, Quincy, MA 02269 (phone: 1-800-344-3555, website: www.nfpa.org and www. sparky.org).

Safe Handling of Compressed Gases in Cylinders, CGA Pamphlet P-1, from Compressed Gas Association, 14501 George Carter Way, Suite 103, Chantilly, VA 20151 (phone: 703-788-2700, website:www.cganet.com).

Safety in Welding, Cutting, and Allied Processes, CSA Standard W117.2, from Canadian Standards Association, Standards Sales, 5060 Spectrum Way, Suite 100, Ontario, Canada L4W 5NS (phone: 800-463-6727, website: www.csa-international.org).

Battery Chargers, CSA Standard C22.2 NO 107.2–01, from Canadian Standards Association, Standards Sales, 5060 Spectrum Way, Suite 100, Ontario, Canada L4W 5NS (phone: 800-463-6727, website: www.csa-international.org).

Safe Practice For Occupational And Educational Eye And Face Protection, ANSI Standard Z87.1, from American National Standards Institute, 25 West 43rd Street, New York, NY 10036 (phone: 212-642-4900, website: www.ansi.org).

Standard for Fire Prevention During Welding, Cutting, and Other Hot Work, NFPA Standard 51B, from National Fire Protection Association, Quincy, MA 02269 (phone: 1-800-344-3555, website: www.nfpa.org.)

OSHA, Occupational Safety and Health Standards for General Industry, Title 29, Code of Federal Regulations (CFR), Part 1910, Subpart Q, and Part 1926, Subpart J, from U.S. Government Printing Office, Superintendent of Documents, P.O. Box 371954, Pittsburgh, PA 15250-7954 (phone: 1-866-512-1800) (there are 10 OSHA Regional Offices—phone for Region 5, Chicago, is 312-353-2220, website: www.osha.gov).

Portable Generators Safety Alert, U.S. Consumer Product Safety Commission (CPSC), 4330 East West Highway, Bethesda, MD 20814 (phone: 301-504-7923, website: www.cpsc.gov/cpscpub/pubs/portgen.pdf).

Applications Manual for the Revised NIOSH Lifting Equation, The National Institute for Occupational Safety and Health (NIOSH), 1600 Clifton Rd, Atlanta, GA 30333 (phone: 1-800-232-4636, website: www.cdc.gov/NIOSH).

1-8. EMF Information

Electric current flowing through any conductor causes localized electric and magnetic fields (EMF). Welding current creates an EMF field around the welding circuit and welding equipment. EMF fields may interfere with some medical implants, e.g. pacemakers. Protective measures for persons wearing medical implants have to be taken. For example, restrict access for passers–by or conduct individual risk assessment for welders. All welders should use the following procedures in order to minimize exposure to EMF fields from the welding circuit:

1. Keep cables close together by twisting or taping them, or using a cable cover.
2. Do not place your body between welding cables. Arrange cables to one side and away from the operator.
3. Do not coil or drape cables around your body.
4. Keep head and trunk as far away from the equipment in the welding circuit as possible.
5. Connect work clamp to workpiece as close to the weld as possible.
6. Do not work next to, sit or lean on the welding power source.
7. Do not weld whilst carrying the welding power source or wire feeder.

About Implanted Medical Devices:

Implanted Medical Device wearers should consult their doctor and the device manufacturer before performing or going near arc welding, spot welding, gouging, plasma arc cutting, or induction heating operations. If cleared by your doctor, then following the above procedures is recommended.

SECTION 2 – CONSIGNES DE SÉCURITÉ – LIRE AVANT UTILISATION

Pour écarter les risques de blessure pour vous–même et pour autrui — lire, appliquer et ranger en lieu sûr ces consignes relatives aux précautions de sécurité et au mode opératoire.

2-1. Signification des symboles

DANGER! – Indique une situation dangereuse qui si on l'évite pas peut donner la mort ou des blessures graves. Les dangers possibles sont montrés par les symboles joints ou sont expliqués dans le texte.

Indique une situation dangereuse qui si on l'évite pas peut donner la mort ou des blessures graves. Les dangers possibles sont montrés par les symboles joints ou sont expliqués dans le texte.

NOTE *– Indique des déclarations pas en relation avec des blessures personnelles.*

☞ *Indique des instructions spécifiques.*

Ce groupe de symboles veut dire Avertissement! Attention! DANGER DE CHOC ELECTRIQUE, PIECES EN MOUVEMENT, et PIECES CHAUDES. Consulter les symboles et les instructions ci-dessous y afférant pour les actions nécessaires afin d'éviter le danger.

2-2. Dangers relatifs au soudage à l'arc

Les symboles présentés ci-après sont utilisés tout au long du présent manuel pour attirer votre attention et identifier les risques de danger. Lorsque vous voyez un symbole, soyez vigilant et suivez les directives mentionnées afin d'éviter tout danger. Les consignes de sécurité présentées ci-après ne font que résumer l'information contenue dans les normes de sécurité énumérées à la section 1-7. Veuillez lire et respecter toutes ces normes de sécurité.

L'installation, l'utilisation, l'entretien et les réparations ne doivent être confiés qu'à des personnes qualifiées.

Au cours de l'utilisation, tenir toute personne à l'écart et plus particulièrement les enfants.

UN CHOC ÉLECTRIQUE peut tuer.

Un simple contact avec des pièces électriques peut provoquer une électrocution ou des blessures graves. L'électrode et le circuit de soudage sont sous tension dès que l'appareil est sur ON. Le circuit d'entrée et les circuits internes de l'appareil sont également sous tension à ce moment-là. En soudage semi-automatique ou automatique, le fil, le dévidoir, le logement des galets d'entraînement et les pièces métalliques en contact avec le fil de soudage sont sous tension. Des matériels mal installés ou mal mis à la terre présentent un danger.

- Ne jamais toucher les pièces électriques sous tension.
- Porter des gants et des vêtements de protection secs ne comportant pas de trous.
- S'isoler de la pièce et de la terre au moyen de tapis ou d'autres moyens isolants suffisamment grands pour empêcher le contact physique éventuel avec la pièce ou la terre.
- Ne pas se servir de source électrique à courant électrique dans les zones humides, dans les endroits confinés ou là où on risque de tomber.
- Se servir d'une source électrique à courant électrique UNIQUEMENT si le procédé de soudage le demande.
- Si l'utilisation d'une source électrique à courant électrique s'avère nécessaire, se servir de la fonction de télécommande si l'appareil en est équipé.
- Des précautions de sécurité supplémentaires sont requises dans des environnements à risque comme: les endroits humides ou lorsque l'on porte des vêtements mouillés; sur des structures métalliques au sol, grillages et échafaudages; dans des positions assises, à genoux et allongées; ou quand il y a un risque important de contact accidentel avec la pièce ou le sol. Dans ces cas utiliser les appareils suivants dans l'ordre de préférence: 1) un poste à souder DC semi–automatique de type CV (MIG/MAG), 2) un poste à souder manuel (électrode enrobée) DC, 3) un poste à souder manuel AC avec tension à vide réduite. Dans la plupart des cas, un poste courant continu de type CV est recommandé. Et, ne pas travailler seul!
- Couper l'alimentation ou arrêter le moteur avant de procéder à l'installation, à la réparation ou à l'entretien de l'appareil. Déverrouiller l'alimentation selon la norme OSHA 29 CFR 1910.147 (voir normes de sécurité).
- Installez, mettez à la terre et utilisez correctement cet équipement conformément à son Manuel d'Utilisation et aux réglementations nationales, gouvernementales et locales.
- Installer et mettre à la terre correctement cet appareil conformément à son manuel d'utilisation et aux codes nationaux, provinciaux et municipaux.
- Toujours vérifier la terre du cordon d'alimentation – Vérifier et s'assurer que le fil de terre du cordon d'alimentation est bien raccordé à la borne de terre du sectionneur ou que la fiche du cordon est raccordée à une prise correctement mise à la terre.
- En effectuant les raccordements d'entrée fixer d'abord le conducteur de mise à la terre approprié et contre-vérifier les connexions.
- Les câbles doivent être exempts d'humidité, d'huile et de graisse; protégez–les contre les étincelles et les pièces métalliques chaudes.
- Vérifier fréquemment le cordon d'alimentation pour voir s'il n'est pas endommagé ou dénudé – remplacer le cordon immédiatement s'il est endommagé – un câble dénudé peut provoquer une électrocution.
- Mettre l'appareil hors tension quand on ne l'utilise pas.
- Ne pas utiliser des câbles usés, endommagés, de grosseur insuffisante ou mal épissés.
- Ne pas enrouler les câbles autour du corps.
- Si la pièce soudée doit être mise à la terre, le faire directement avec un câble distinct – ne pas utiliser le connecteur de pièce ou le câble de retour.
- Ne pas toucher l'électrode quand on est en contact avec la pièce, la terre ou une électrode provenant d'une autre machine.
- Ne pas toucher des porte électrodes connectés à deux machines en même temps à cause de la présence d'une tension à vide doublée.
- N'utiliser qu'un matériel en bon état. Réparer ou remplacer sur-le-champ les pièces endommagées. Entretenir l'appareil conformément à ce manuel.
- Porter un harnais de sécurité quand on travaille en hauteur.
- Maintenir solidement en place tous les panneaux et capots.
- Fixer le câble de retour de façon à obtenir un bon contact métal-métal avec la pièce à souder ou la table de travail, le plus près possible de la soudure.
- Isoler la pince de masse quand pas mis à la pièce pour éviter le contact avec tout objet métallique.
- Ne pas raccorder plus d'une électrode ou plus d'un câble de masse à une même borne de sortie de soudage. Débrancher le câble pour le procédé non utilisé.

Il reste une TENSION DC NON NÉGLIGEABLE dans les sources de soudage onduleur UNE FOIS le moteur coupé.

- Couper l'alimentation du poste et décharger les condensateurs d'entrée comme indiqué dans la Section Maintenance avant de toucher des composants.

LES PIÈCES CHAUDES peuvent provoquer des brûlures.

- Ne pas toucher à mains nues les parties chaudes.
- Prévoir une période de refroidissement avant de travailler à l'équipement.
- Ne pas toucher aux pièces chaudes, utiliser les outils recommandés et porter des gants de soudage et des vêtements épais pour éviter les brûlures.

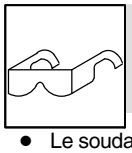

DES PIECES DE METAL ou DES SALETES peuvent provoquer des blessures dans les yeux.

- Le soudage, l'écaillement, le passage de la pièce à la brosse en fil de fer, et le meulage génèrent des étincelles et des particules métalliques volantes. Pendant la période de refroidissement des soudures, elles risquent de projeter du laitier.
- Porter des lunettes de sécurité avec écrans latéraux ou un écran facial.

LES FUMÉES ET LES GAZ peuvent être dangereux.

Le soudage génère des fumées et des gaz. Leur inhalation peut être dangereux pour votre santé.

- Eloigner votre tête des fumées. Ne pas respirer les fumées.
- À l'intérieur, ventiler la zone et/ou utiliser une ventilation forcée au niveau de l'arc pour l'évacuation des fumées et des gaz de soudage.
- Si la ventilation est médiocre, porter un respirateur anti-vapeurs approuvé.
- Lire et comprendre les spécifications de sécurité des matériaux (MSDS) et les instructions du fabricant concernant les métaux, les consommables, les revêtements, les nettoyants et les dégraisseurs.
- Travailler dans un espace fermé seulement s'il est bien ventilé ou en portant un respirateur à alimentation d'air. Demander toujours à un surveillant dûment formé de se tenir à proximité. Des fumées et des gaz de soudage peuvent déplacer l'air et abaisser le niveau d'oxygène provoquant des blessures ou des accidents mortels. S'assurer que l'air de respiration ne présente aucun danger.
- Ne pas souder dans des endroits situés à proximité d'opérations de dégraissage, de nettoyage ou de pulvérisation. La chaleur et les rayons de l'arc peuvent réagir en présence de vapeurs et former des gaz hautement toxiques et irritants.
- Ne pas souder des métaux munis d'un revêtement, tels que l'acier galvanisé, plaqué en plomb ou au cadmium à moins que le revêtement n'ait été enlevé dans la zone de soudure, que l'endroit soit bien ventilé, et en portant un respirateur à alimentation d'air. Les revêtements et tous les métaux renfermant ces éléments peuvent dégager des fumées toxiques en cas de soudage.

LES ACCUMULATIONS DE GAZ risquent de provoquer des blessures ou même la mort.

- Fermer l'alimentation du gaz comprimé en cas de non utilisation.
- Veiller toujours à bien aérer les espaces confinés ou se servir d'un respirateur d'adduction d'air homologué.

LES RAYONS DE L'ARC peuvent provoquer des brûlures dans les yeux et sur la peau.

Le rayonnement de l'arc du procédé de soudage génère des rayons visibles et invisibles intenses (ultraviolets et infrarouges) susceptibles de provoquer des brûlures dans les yeux et sur la peau. Des étincelles sont projetées pendant le soudage.

- Porter un casque de soudage approuvé muni de verres filtrants approprié pour protéger visage et yeux pour protéger votre visage et vos yeux pendant le soudage ou pour regarder (voir ANSI Z49.1 et Z87.1 énuméré dans les normes de sécurité).
- Porter des lunettes de sécurité avec écrans latéraux même sous votre casque.
- Avoir recours à des écrans protecteurs ou à des rideaux pour protéger les autres contre les rayonnements les éblouissements et les étincelles ; prévenir toute personne sur les lieux de ne pas regarder l'arc.
- Porter des vêtements confectionnés avec des matières résistantes et ignifuges (cuir, coton lourd ou laine) et des bottes de protection.

LE SOUDAGE peut provoquer un incendie ou une explosion.

Le soudage effectué sur des conteneurs fermés tels que des réservoirs, tambours ou des conduites peut provoquer leur éclatement. Des étincelles peuvent être projetées de l'arc de soudure. La projection d'étincelles, des pièces chaudes et des équipements chauds peut provoquer des incendies et des brûlures. Le contact accidentel de l'électrode avec des objets métalliques peut provoquer des étincelles, une explosion, un surchauffement ou un incendie. Avant de commencer le soudage, vérifier et s'assurer que l'endroit ne présente pas de danger.

- Déplacer toutes les substances inflammables à une distance de 10,7 m de l'arc de soudage. En cas d'impossibilité les recouvrir soigneusement avec des protections homologués.
- Ne pas souder dans un endroit là où des étincelles peuvent tomber sur des substances inflammables.
- Se protéger et d'autres personnes de la projection d'étincelles et de métal chaud.
- Des étincelles et des matériaux chauds du soudage peuvent facilement passer dans d'autres zones en traversant de petites fissures et des ouvertures.
- Surveiller tout déclenchement d'incendie et tenir un extincteur à proximité.
- Le soudage effectué sur un plafond, plancher, paroi ou séparation peut déclencher un incendie de l'autre côté.
- Ne pas effectuer le soudage sur des conteneurs fermés tels que des réservoirs, tambours, ou conduites, à moins qu'ils n'aient été préparés correctement conformément à AWS F4.1 et AWS A6.0 (voir les Normes de Sécurité).
- Ne soudez pas si l'air ambiant est chargé de particules, gaz, ou vapeurs inflammables (vapeur d'essence, par exemple).
- Brancher le câble de masse sur la pièce le plus près possible de la zone de soudage pour éviter le transport du courant sur une longue distance par des chemins inconnus éventuels en provoquant des risques d'électrocution, d'étincelles et d'incendie.
- Ne pas utiliser le poste de soudage pour dégeler des conduites gelées.
- En cas de non utilisation, enlever la baguette d'électrode du porte-électrode ou couper le fil à la pointe de contact.
- Porter des vêtements de protection dépourvus d'huile tels que des gants en cuir, une chemise en matériau lourd, des pantalons sans revers, des chaussures hautes et un couvre chef.
- Avant de souder, retirer toute substance combustible de vos poches telles qu'un allumeur au butane ou des allumettes.
- Une fois le travail achevé, assurez–vous qu'il ne reste aucune trace d'étincelles incandescentes ni de flammes.
- Utiliser exclusivement des fusibles ou coupe–circuits appropriés. Ne pas augmenter leur puissance; ne pas les ponter.
- Suivre les recommandations dans OSHA 1910.252(a)(2)(iv) et NFPA 51B pour les travaux à chaud et avoir de la surveillance et un extincteur à proximité.

LE BRUIT peut affecter l'ouïe.

Le bruit des processus et des équipements peut affecter l'ouïe.

- Porter des protections approuvés pour les oreilles si le niveau sonore est trop élevé.

Les CHAMPS ÉLECTROMAGNÉTIQUES (CEM) peuvent affecter les implants médicaux.

- Les porteurs de stimulateurs cardiaques et autres implants médicaux doivent rester à distance.
- Les porteurs d'implants médicaux doivent consulter leur médecin et le fabricant du dispositif avant de s'approcher de la zone où se déroule du soudage à l'arc, du soudage par points, du gougeage, de la découpe plasma ou une opération de chauffage par induction.

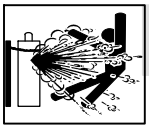

Si des BOUTEILLES sont endommagées, elles pourront exploser.

Des bouteilles de gaz comprimé protecteur contiennent du gaz sous haute pression. Si une bouteille est endommagée, elle peut exploser. Du fait que les bouteilles de gaz font normalement partie du procédé de soudage, les manipuler avec précaution.

- Protéger les bouteilles de gaz comprimé d'une chaleur excessive, des chocs mécaniques, des dommages physiques, du laitier, des flammes ouvertes, des étincelles et des arcs.
- Placer les bouteilles debout en les fixant dans un support stationnaire ou dans un porte-bouteilles pour les empêcher de tomber ou de se renverser.
- Tenir les bouteilles éloignées des circuits de soudage ou autres circuits électriques.
- Ne jamais placer une torche de soudage sur une bouteille à gaz.
- Une électrode de soudage ne doit jamais entrer en contact avec une bouteille.
- Ne jamais souder une bouteille pressurisée – risque d'explosion.
- Utiliser seulement des bouteilles de gaz comprimé, régulateurs, tuyaux et raccords convenables pour cette application spécifique; les maintenir ainsi que les éléments associés en bon état.
- Ne pas tenir la tête en face de la sortie en ouvrant la soupape de la bouteille.
- Maintenir le chapeau de protection sur la soupape, sauf en cas d'utilisation ou de branchement de la bouteille.
- Utiliser les équipements corrects, les bonnes procédures et suffisamment de personnes pour soulever et déplacer les bouteilles.
- Lire et suivre les instructions sur les bouteilles de gaz comprimé, l'équipement connexe et le dépliant P-1 de la CGA (Compressed Gas Association) mentionné dans les principales normes de sécurité.

2-3. Dangers existant en relation avec le moteur

L'EXPLOSION DE LA BATTERIE peut provoquer des blessures.

- Toujours porter une protection faciale, des gants en caoutchouc et vêtements de protection lors d'une intervention sur la batterie.
- Arrêter le moteur avant de débrancher ou de brancher des câbles de batterie, des câbles de chargeur de batterie (le cas échéant) ou de batterie d'entretien.
- Eviter de provoquer des étincelles avec les outils en travaillant sur la batterie.
- Ne pas utiliser l'appareil de soudage pour charger des batteries ou faire démarrer des véhicules à l'aide de câbles de démarrage, sauf si l'appareil dispose d'une fonctionnalité de charge de batterie destinée à cet usage.
- Observer la polarité correcte (+ et –) sur les batteries.
- Débrancher le câble négatif (–) en premier lieu. Le rebrancher en dernier lieu.
- Les sources d'étincelles, flammes nues, cigarettes et autres sources d'inflammation doivent être maintenues à l'écart des batteries. Ces dernières produisent des gaz explosifs en fonctionnement normal et en cours de charge.
- Respecter les consignes du fabricant de la batterie pour travailler sur une batterie ou à proximité.

LE CARBURANT MOTEUR peut provoquer un incendie ou une explosion.

- Arrêter le moteur avant de vérifier le niveau de carburant ou de faire le plein.
- Ne pas faire le plein en fumant ou proche d'une source d'étincelles ou d'une flamme nue.
- Ne pas faire le plein de carburant à ras bord; prévoir de l'espace pour son expansion.
- Faire attention de ne pas renverser de carburant. Nettoyer tout carburant renversé avant de faire démarrer le moteur.
- Jeter les chiffons dans un récipient ignifuge.
- Toujours garder le pistolet en contact avec le réservoir lors du remplissage.

Les PIÈCES MOBILES peuvent causer des blessures.

- S'abstenir de toucher des parties mobiles telles que des ventilateurs, courroies et rotors.
- Maintenir fermés et verrouillés les portes, panneaux, recouvrements et dispositifs de protection.
- Arrêter le moteur avant d'installer ou brancher l'appareil.
- Lorsque cela est nécessaire pour des travaux d'entretien et de dépannage, faire retirer les portes, panneaux, recouvrements ou dispositifs de protection uniquement par du personnel qualifié.
- Pour empêcher tout démarrage accidentel pendant les travaux d'entretien, débrancher le câble négatif (–) de batterie de la borne.
- Ne pas approcher les mains, cheveux, vêtements lâches et outils des organes mobiles.
- Remettre en place les portes, panneaux, recouvrements ou dispositifs de protection à la fin des travaux d'entretien et avant de mettre le moteur en marche.
- Avant d'intervenir, déposer les bougies ou injecteurs pour éviter la mise en route accidentelle du moteur.
- Bloquer le volant moteur pour éviter sa rotation lors d'une intervention sur le générateur.

LES ÉTINCELLES À L'ÉCHAPPEMENT peuvent provoquer un incendie.

- Empêcher les étincelles d'échappement du moteur de provoquer un incendie.
- Utiliser uniquement un pare-étincelles approuvé – voir codes en vigueur.

LES PIÈCES CHAUDES peuvent provoquer des brûlures.

- Ne pas toucher des parties chaudes à mains nues.
- Prévoir une période de refroidissement avant de travailler à l'équipement.
- Ne pas toucher aux pièces chaudes, utiliser les outils recommandés et porter des gants de soudage et des vêtements épais pour éviter les brûlures.

LA VAPEUR ET LE LIQUIDE DE REFROIDISSEMENT CHAUD peuvent provoquer des brûlures.

- Il est préférable de vérifier le liquide de refroidissement une fois le moteur refroidi pour éviter de se brûler.

- Toujours vérifier le niveau de liquide de refroidissement dans le vase d'expansion (si présent), et non dans le radiateur (sauf si précisé autrement dans la section maintenance du manuel du moteur).
- Si le moteur est chaud et que le liquide doit être vérifié, opérer comme suivant.
- Mettre des lunettes de sécurité et des gants, placer un torchon sur le bouchon du radiateur.
- Dévisser le bouchon légèrement et laisser la vapeur s'échapper avant d'enlever le bouchon.

L'utilisation d'un groupe autonome à l'intérieur PEUT VOUS TUER EN QUELQUES MINUTES.

- Les fumées d'un groupe autonome contient du monoxyde de carbone. C'est un poison invisible et inodore.
- JAMAIS utiliser dans une maison ou garage, même avec les portes et fenêtres ouvertes.

- Uniquement utiliser à l'EXTERIEUR, loin des portes, fenêtres et bouches aération.

L'ACIDE DE LA BATTERIE peut provoquer des brûlures dans les YEUX et sur la PEAU.

- Ne pas renverser la batterie.
- Remplacer une batterie endommagée.

- Rincer immédiatement les yeux et la peau à l'eau.

LA CHALEUR DU MOTEUR peut provoquer un incendie.

- Ne pas placer l'appareil sur, au-dessus ou à proximité de surfaces inflammables.

- Tenir à distance les produits inflammables de l'échappement.

2-4. Dangers liés à l'air comprimé

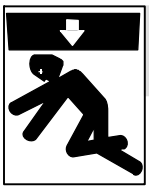

Un ÉQUIPEMENT PNEUMATIQUE risque de provoquer des blessures ou même la mort.

- Une installation ou une utilisation incorrecte de cet appareil pourrait conduire à des dégâts matériels ou corporels. Seul un personnel qualifié est autorisé à installer, utiliser et entretenir cet appareil conformément à son manuel d'utilisation, aux normes industrielles et aux codes nationaux, d'état ou locaux.

- Ne pas dépasser le débit nominal ou la capacité du compresseur ou de tout équipement du circuit d'air comprimé. Concevoir le circuit d'air comprimé de telle sorte que la défaillance d'un composant ne risque pas de provoquer un accident matériel ou corporel.
- Avant d'intervenir sur le circuit d'air comprimé, couper l'alimentation électrique, verrouiller et étiqueter l'appareil, détendre la pression et s'assurer que le circuit d'air ne peut être mis sous pression par inadvertance.
- Ne pas intervenir sur le circuit d'air comprimé lorsque l'appareil fonctionne. Seul un personnel qualifié est autorisé, et appliquant les consignes du fabricant.
- Ne pas modifier ou altérer le compresseur ou les équipements fournis par le fabricant. Ne pas débrancher, désactiver ou neutraliser les équipements de sécurité du circuit d'air comprimé.
- Utiliser uniquement des composants et accessoires homologués par le fabricant.
- Se tenir à l'écart de tout point présentant un danger de pincement ou d'écrasement créé par l'équipement raccordé au circuit d'air comprimé.
- Ne pas intervenir sous ou autour d'un équipement qui n'est soutenu que par la pression pneumatique. Soutenir l'équipement de façon appropriée par un moyen mécanique.

MÉTAL CHAUD provenant du découpage ou du gougeage à l'arc risque de provoquer un incendie ou une explosion.

- Ne pas découper ou gouger à proximité de produits inflammables.

- Attention aux risques d'incendie: tenir un extincteur à proximité.

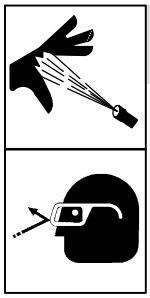

L'AIR COMPRIMÉ risque de provoquer des blessures ou même la mort.

- Avant d'intervenir sur le circuit d'air comprimé, couper l'alimentation électrique, verrouiller et étiqueter l'appareil, détendre la pression et s'assurer que le circuit d'air ne peut être mis sous pression par inadvertance.
- Détendre la pression avant de débrancher ou de brancher des canalisations d'air.
- Avant d'utiliser l'appareil, contrôler les composants du circuit d'air comprimé, les branchements et les flexibles en recherchant tout signe de détérioration, de fuite et d'usure.

- Ne pas diriger un jet d'air vers soi–même ou vers autrui.
- Pour intervenir sur un circuit d'air comprimé, porter un équipement de protection tel que des lunettes de sécurité, des gants de cuir, une chemise et un pantalon en tissu résistant, des chaussures montantes et une coiffe.
- Pour rechercher des fuites, utiliser de l'eau savonneuse ou un détecteur à ultrasons, jamais les mains nues. En cas de détection de fuite, ne pas utiliser l'équipement.
- Remettre les portes, panneaux, recouvrements ou dispositifs de protection quand l'entretien est terminé et avant de mettre en marche l'appareil.
- En cas d'injection d'air dans la peau ou le corps, demander immédiatement une assistance médicale.

L'INHALATION D'AIR COMPRIMÉ risque de provoquer des blessures ou même la mort.

- Ne pas inhaler d'air comprimé.
- Utiliser l'air comprimé uniquement pour découper ou gouger ainsi que pour l'outillage pneumatique.

Une PRESSION D'AIR RÉSIDUELLE ET DES FLEXIBLES QUI FOUETTENT risquent de provoquer des blessures.

- Détendre la pression pneumatique des outils et circuits avant d'entretenir, ajouter ou changer des accessoires et avant d'ouvrir le bouchon de vidange ou de remplissage d'huile du compresseur.

Les PIÈCES MOBILES peuvent causer des blessures.

- S'abstenir de toucher des parties mobiles telles que des ventilateurs, courroies et rotors.
- Maintenir fermés et verrouillés les portes, panneaux, recouvrements et dispositifs de protection.

- Ne pas approcher les mains, cheveux, vêtements lâches et outils des organes mobiles.
- Avant d'intervenir sur le circuit d'air comprimé, couper l'alimentation électrique, verrouiller et étiqueter l'appareil, détendre la pression et s'assurer que le circuit d'air ne peut être mis sous pression par inadvertance.
- Demander seulement à un personnel qualifié d'enlever les dispositifs de sécurité ou les recouvrements pour effectuer, s'il y a lieu, des travaux d'entretien et de dépannage.
- Remettre en place les portes, panneaux, recouvrements ou dispositifs de protection à la fin des travaux d'entretien et avant de mettre le moteur en marche.

DES PIÈCES CHAUDES peuvent provoquer des brûlures graves.

- Ne pas toucher de pièces chaudes du compresseur ou du circuit d'air.
- Prévoir une période de refroidissement avant d'intervenir sur l'équipement.

- Ne pas toucher aux pièces chaudes, utiliser les outils recommandés et porter des gants de soudage et des vêtements épais pour éviter les brûlures.

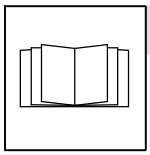

LIRE LES INSTRUCTIONS.

- Lire et appliquer les instructions sur les étiquettes et le Mode d'emploi avant l'installation, l'utilisation ou l'entretien de l'appareil. Lire les informations de sécurité au début du manuel et dans chaque section.

- N'utiliser que les pièces de rechange recommandées par le constructeur.
- Effectuer l'entretien en respectant les manuels d'utilisation, les normes industrielles et les codes nationaux, d'état et locaux.

2-5. Dangers supplémentaires en relation avec l'installation, le fonctionnement et la maintenance

Risque D'INCENDIE OU D'EXPLOSION.

- Ne pas placer l'appareil sur, au-dessus ou à proximité de surfaces inflammables.
- Ne pas installer l'appareil à proximité de produits inflammables.

- Ne pas surcharger l'installation électrique – s'assurer que l'alimentation est correctement dimensionnée et protégée avant de mettre l'appareil en service.

LA CHUTE DE L'ÉQUIPEMENT peut provoquer des blessures.

- Utiliser l'anneau de levage pour lever l'appareil et les accessoires correctement installées seuls, PAS les bouteilles de gaz. Ne pas dépasser le poids nominal maximal de l'œilleton (voir les spécifications).

- Utiliser un équipement de levage de capacité suffisante pour lever l'appareil.
- En utilisant des fourches de levage pour déplacer l'unité, s'assurer que les fourches sont suffisamment longues pour dépasser du côté opposé de l'appareil.
- Tenir l'équipement (câbles et cordons) à distance des véhicules mobiles lors de toute opération en hauteur.
- Suivre les consignes du Manuel des applications pour l'équation de levage NIOSH révisée (Publication N°94–110) lors du levage manuelle de pièces ou équipements lourds.

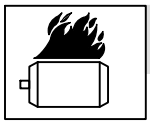

LE SURCHAUFFEMENT peut endommager le moteur électrique.

- Arrêter ou déconnecter l'équipement avant de démarrer ou d'arrêter le moteur.

- Ne pas laisser tourner le moteur trop lentement sous risque d'endommager le moteur électrique à cause d'une tension et d'une fréquence trop faibles.
- Ne pas brancher de moteur de 50 ou de 60 Hz à la prise de 100 Hz, s'il y a lieu.

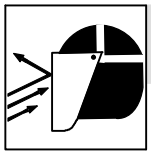

LES ÉTINCELLES PROJETÉES peuvent provoquer des blessures.

- Porter un écran facial pour protéger le visage et les yeux.
- Affûter l'électrode au tungstène uniquement à la meuleuse dotée de protecteurs. Cette manœuvre est à exécuter dans un endroit sûr lorsque l'on porte l'équipement homologué de protection du visage, des mains et du corps.

- Les étincelles risquent de causer un incendie – éloigner toute substance inflammable.

Les PIÈCES MOBILES peuvent causer des blessures.

- Ne pas s'approcher des organes mobiles.
- Ne pas s'approcher des points de coincement tels que des rouleaux de commande.

LA SORTIE DE RECHARGE et L'EXPLOSION DE LA BATTERIE peuvent provoquer des blessures.

La recharge de batterie n'existe pas sur tous les modèles.

- Toujours porter une protection faciale, des gants en caoutchouc et vêtements de protection lors d'une intervention sur la batterie.
- Arrêter le moteur avant de débrancher ou de brancher des câbles de batterie, des câbles de chargeur de batterie (le cas échéant) ou de batterie d'entretien.
- Eviter de provoquer des étincelles avec les outils en travaillant sur la batterie.
- Ne pas utiliser l'appareil de soudage pour charger des batteries ou faire démarrer des véhicules à l'aide de câbles de démarrage, sauf si l'appareil dispose d'une fonctionnalité de charge de batterie destinée à cet usage.
- Observer la polarité correcte (+ et –) sur les batteries.
- Débrancher le câble négatif (–) en premier lieu. Le rebrancher en dernier lieu.
- Les sources d'étincelles, flammes nues, cigarettes et autres sources d'inflammation doivent être maintenues à l'écart des batteries. Ces dernières produisent des gaz explosifs en fonctionnement normal et en cours de charge.
- Respecter les consignes du fabricant de la batterie pour travailler sur une batterie ou à proximité.
- Les opérations de charge de batterie ne doivent être effectuées que par des personnes qualifiées.
- Pour enlever la batterie d'un véhicule pour la recharge, débrancher tout d'abord le câble négatif (–) et le rebrancher en dernier lieu. Pour éviter un arc, s'assurer que tous les accessoires sont débranchés.
- Ne charger que des batteries plomb–acide. Ne pas utiliser le chargeur de batterie pour alimenter un autre circuit électrique basse tension ou pour charger des batteries sèches.
- Ne pas charger une batterie gelée.
- Ne pas utiliser de câbles de charge endommagés.
- Ne pas charger des batteries dans un espace fermé ou en l'absence d'une ventilation.
- Ne pas charger une batterie dont les bornes sont desserrées ou présentant une détérioration comme par exemple un boîtier ou un couvercle fissuré.
- Avant de charger une batterie, sélectionner la tension de charge correspondant à la tension de la batterie.
- Régler les commandes de charge de batterie sur la position d'arrêt avant de brancher la batterie. Veiller à ce que les pinces de charge ne se touchent pas.
- Ranger les câbles de charge à distance du capot, des portes et des pièces mobiles du véhicule.

LES FILS DE SOUDAGE peuvent provoquer des blessures.

- Ne pas appuyer sur la gâchette avant d'en avoir reçu l'instruction.
- Ne pas diriger le pistolet vers soi, d'autres personnes ou toute pièce mécanique en engageant le fil de soudage.

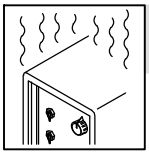

L'EMPLOI EXCESSIF peut SURCHAUFFER L'ÉQUIPEMENT.

- Laisser l'équipement refroidir ; respecter le facteur de marche nominal.
- Réduire le courant ou le facteur de marche avant de poursuivre le soudage.
- Ne pas obstruer les passages d'air du poste.

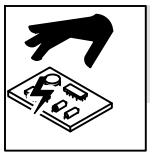

LES CHARGES ÉLECTROSTATIQUES peuvent endommager les circuits imprimés.

- Établir la connexion avec la barrette de terre avant de manipuler des cartes ou des pièces.
- Utiliser des pochettes et des boîtes antistatiques pour stocker, déplacer ou expédier des cartes de circuits imprimes.

UNE REMORQUE QUI BASCULE peut provoquer des blessures.

- Utiliser les supports de la remorque ou des blocs pour soutenir le poids.
- Installer convenablement le poste sur la remorque comme indiqué dans le manuel s'y rapportant.

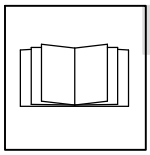

LIRE LES INSTRUCTIONS.

- Lire et appliquer les instructions sur les étiquettes et le Mode d'emploi avant l'installation, l'utilisation ou l'entretien de l'appareil. Lire les informations de sécurité au début du manuel et dans chaque section.
- N'utiliser que les pièces de rechange recommandées par le constructeur.
- Effectuer l'entretien en respectant les manuels d'utilisation, les normes industrielles et les codes nationaux, d'état et locaux.

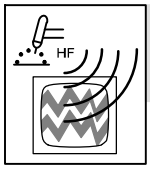

LE RAYONNEMENT HAUTE FRÉQUENCE (H.F.) risque de provoquer des interférences.

- Le rayonnement haute fréquence (H.F.) peut provoquer des interférences avec les équipements de radio–navigation et de communication, les services de sécurité et les ordinateurs.
- Demander seulement à des personnes qualifiées familiarisées avec des équipements électroniques de faire fonctionner l'installation.
- L'utilisateur est tenu de faire corriger rapidement par un électricien qualifié les interférences résultant de l'installation.
- Si le FCC signale des interférences, arrêter immédiatement l'appareil.
- Effectuer régulièrement le contrôle et l'entretien de l'installation.
- Maintenir soigneusement fermés les portes et les panneaux des sources de haute fréquence, maintenir les éclateurs à une distance correcte et utiliser une terre et un blindage pour réduire les interférences éventuelles.

LE SOUDAGE À L'ARC risque de provoquer des interférences.

- L'énergie électromagnétique risque de provoquer des interférences pour l'équipement électronique sensible tel que les ordinateurs et l'équipement commandé par ordinateur tel que les robots.
- Veiller à ce que tout l'équipement de la zone de soudage soit compatible électromagnétiquement.
- Pour réduire la possibilité d'interférence, maintenir les câbles de soudage aussi courts que possible, les grouper, et les poser aussi bas que possible (ex. par terre).
- Veiller à souder à une distance de 100 mètres de tout équipement électronique sensible.
- Veiller à ce que ce poste de soudage soit posé et mis à la terre conformément à ce mode d'emploi.
- En cas d'interférences après avoir pris les mesures précédentes, il incombe à l'utilisateur de prendre des mesures supplémentaires telles que le déplacement du poste, l'utilisation de câbles blindés, l'utilisation de filtres de ligne ou la pose de protecteurs dans la zone de travail.

2-6. Proposition californienne 65 Avertissements

Les équipements de soudage et de coupage produisent des fumées et des gaz qui contiennent des produits chimiques dont l'État de Californie reconnaît qu'ils provoquent des malformations congénitales et, dans certains cas, des cancers. (Code de santé et de sécurité de Californie, chapitre 25249.5 et suivants)

Les batteries, les bornes et autres accessoires contiennent du plomb et des composés à base de plomb, produits chimiques dont l'État de Californie reconnaît qu'ils provoquent des cancers et des malformations congénitales ou autres problèmes de procréation. *Se laver les mains après manipulation.*

Ce produit contient des produits chimiques, notamment du plomb, dont l'État de Californie reconnaît qu'ils provoquent des cancers, des malformations congénitales ou d'autres problèmes de procréation. *Se laver les mains après utilisation.*

Pour les moteurs à essence :

Les gaz d'échappement des moteurs contiennent des produits chimiques dont l'État de Californie reconnaît qu'ils provoquent des cancers et des malformations congénitales ou autres problèmes de procréation.

Pour les moteurs diesel :

Les gaz d'échappement des moteurs diesel et certains de leurs composants sont reconnus par l'État de Californie comme provoquant des cancers et des malformations congénitales ou autres problèmes de procréation.

2-7. Principales normes de sécurité

Safety in Welding, Cutting, and Allied Processes, ANSI Standard Z49.1, is available as a free download from the American Welding Society at http://www.aws.org or purchased from Global Engineering Documents (phone: 1-877-413-5184, website: www.global.ihs.com).

Safe Practices for the Preparation of Containers and Piping for Welding and Cutting, American Welding Society Standard AWS F4.1, from Global Engineering Documents (phone: 1-877-413-5184, website: www.global.ihs.com).

Safe Practices for Welding and Cutting Containers that have Held Combustibles, American Welding Society Standard AWS A6.0, from Global Engineering Documents (phone: 1-877-413-5184, website: www.global.ihs.com).

National Electrical Code, NFPA Standard 70, from National Fire Protection Association, Quincy, MA 02269 (phone: 1-800-344-3555, website: www.nfpa.org and www. sparky.org).

Safe Handling of Compressed Gases in Cylinders, CGA Pamphlet P-1, from Compressed Gas Association, 14501 George Carter Way, Suite 103, Chantilly, VA 20151 (phone: 703-788-2700, website:www.cganet.com).

Safety in Welding, Cutting, and Allied Processes, CSA Standard W117.2, from Canadian Standards Association, Standards Sales, 5060 Spectrum Way, Suite 100, Ontario, Canada L4W 5NS (phone: 800-463-6727, website: www.csa-international.org).

Battery Chargers, CSA Standard C22.2 NO 107.2–01, from Canadian Standards Association, Standards Sales, 5060 Spectrum Way, Suite 100, Ontario, Canada L4W 5NS (phone: 800-463-6727, website: www.csa-international.org).

Safe Practice For Occupational And Educational Eye And Face Protection, ANSI Standard Z87.1, from American National Standards Institute, 25 West 43rd Street, New York, NY 10036 (phone: 212-642-4900, website: www.ansi.org).

Standard for Fire Prevention During Welding, Cutting, and Other Hot Work, NFPA Standard 51B, from National Fire Protection Association, Quincy, MA 02269 (phone: 1-800-344-3555, website: www.nfpa.org.)

OSHA, Occupational Safety and Health Standards for General Industry, Title 29, Code of Federal Regulations (CFR), Part 1910, Subpart Q, and Part 1926, Subpart J, from U.S. Government Printing Office, Superintendent of Documents, P.O. Box 371954, Pittsburgh, PA 15250-7954 (phone: 1-866-512-1800) (there are 10 OSHA Regional Offices—phone for Region 5, Chicago, is 312-353-2220, website: www.osha.gov).

Portable Generators Safety Alert, U.S. Consumer Product Safety Commission (CPSC), 4330 East West Highway, Bethesda, MD 20814 (phone: 301-504-7923, website: www.cpsc.gov/cpscpub/pubs/portgen.pdf).

Applications Manual for the Revised NIOSH Lifting Equation, The National Institute for Occupational Safety and Health (NIOSH), 1600 Clifton Rd, Atlanta, GA 30333 (phone: 1-800-232-4636, website: www.cdc.gov/NIOSH).

2-8. Informations relatives aux CEM

Le courant électrique qui traverse tout conducteur génère des champs électromagnétiques (CEM) à certains endroits. Le courant de soudage crée un CEM autour du circuit et du matériel de soudage. Les CEM peuvent créer des interférences avec certains implants médicaux comme des stimulateurs cardiaques. Des mesures de protection pour les porteurs d'implants médicaux doivent être prises: par exemple, des restrictions d'accès pour les passants ou une évaluation individuelle des risques pour les soudeurs. Tous les soudeurs doivent appliquer les procédures suivantes pour minimiser l'exposition aux CEM provenant du circuit de soudage:

1. Rassembler les câbles en les torsadant ou en les attachant avec du ruban adhésif ou avec une housse.
2. Ne pas se tenir au milieu des câbles de soudage. Disposer les câbles d'un côté et à distance de l'opérateur.
3. Ne pas courber et ne pas entourer les câbles autour de votre corps.
4. Maintenir la tête et le torse aussi loin que possible du matériel du circuit de soudage.
5. Connecter la pince sur la pièce aussi près que possible de la soudure.
6. Ne pas travailler à proximité d'une source de soudage, ni s'asseoir ou se pencher dessus.
7. Ne pas souder tout en portant la source de soudage ou le dévidoir.

En ce qui concerne les implants médicaux :

Les porteurs d'implants doivent d'abord consulter leur médecin avant de s'approcher des opérations de soudage à l'arc, de soudage par points, de gougeage, du coupage plasma ou de chauffage par induction. Si le médecin approuve, il est recommandé de suivre les procédures précédentes.

SECTION 3 – DEFINITIONS

3-1. Symbol Definitions

	Stop Engine		Fast (Run, Weld/Power)		Fast/Slow (Run/Idle)		Slow (Idle)
	Start Engine		Panel/Local		Temperature		Fuel
	Engine Oil		Engine Choke		Check Valve Clearance		Battery (Engine)
	Engine		Read Operator's Manual	A	Amperes	V	Volts
	MIG (GMAW), Wire		Stick (SMAW)		TIG (GTAW)		Lift Arc TIG
+	Positive	—	Negative		Alternating Current (AC)		Output
	Time	h	Hours	s	Seconds		Protective Earth (Ground)
	Do not switch while welding		Remote Receptacle		Work Connection	CC	Constant Current
	Wire Feed	+	Electrode Positive	−	Electrode Negative	CV	Constant Voltage
	Circuit Protector						

SECTION 4 – SPECIFICATIONS

4-1. Weld, Power, And Carbureted Engine Specifications (Subaru EH65, Kohler CH-23)

Welding Mode	Rated Welding Output	Maximum Open-Circuit Voltage	Weld Output Range	Generator Power Rating	Fuel Capacity	Engine
CC/DC	280 A, 25 V, 100% Duty Cycle	50	20 – 300 A	**Peak:** 11 kVA/kW (w/Weld Contactor Off) **Continuous:** 9.5 kVA/kW, 80/40 A, 120/240 V AC, 60 Hz, Single-Phase	12 gal (45 L) Tank	Subaru EH65 Air-Cooled, Two-Cylinder, Four-Cycle, 23 HP Gasoline Engine or Kohler CH-23 Air-Cooled, Two-Cylinder, Four-Cycle, 23 HP Gasoline Engine
CV/DC	300 A, 25 V, 100% Duty Cycle	35	13 – 35 V			
CC/AC*	200 A, 25 V, 60% Duty Cycle	60	35 – 225 A			

* AC/DC Models Only.

4-2. Weld, Power, And EFI Engine Specifications (Kohler ECH-730)

Welding Mode	Rated Welding Output	Maximum Open-Circuit Voltage	Weld Output Range	Generator Power Rating	Fuel Capacity	Engine
CC/DC	280 A, 25 V, 100% Duty Cycle	50	20 – 300 A	**Peak:** 12 kVA/kW (w/Weld Contactor Off) **Continuous:** 10.5 kVA/kW, 88/44 A, 120/240 V AC, 60 Hz, Single-Phase	12 gal (45 L) Tank	Kohler ECH-730 Air-Cooled, Two-Cylinder, Four-Cycle, 25 HP Electronic Fuel Injected Gasoline Engine
CV/DC	300 A, 25 V, 100% Duty Cycle	35	13 – 35 V			
CC/AC*	200 A, 25 V, 60% Duty Cycle	60	35 – 225 A			

* AC/DC Models Only.

Notes

4-3. Dimensions, Weights, And Operating Angles

Do not exceed tilt angles or engine could be damaged or unit could tip.

Do not move or operate unit where it could tip.

Weight: 580 lb (263 kg)

Lifting Eye Weight Rating: 1280 lb (580 kg)

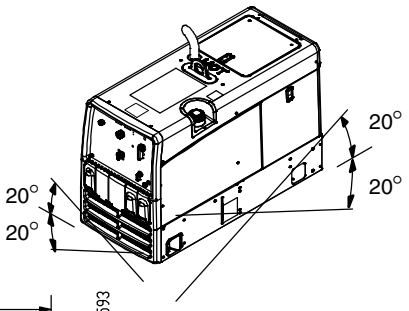

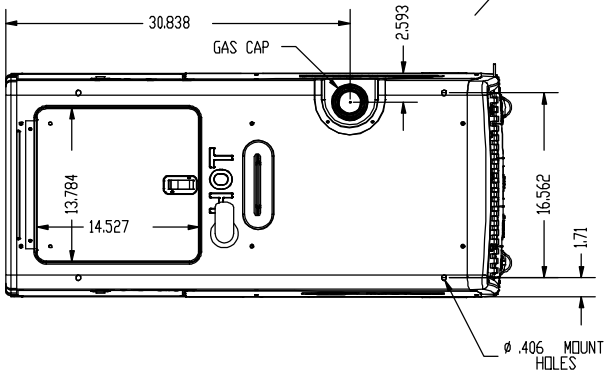

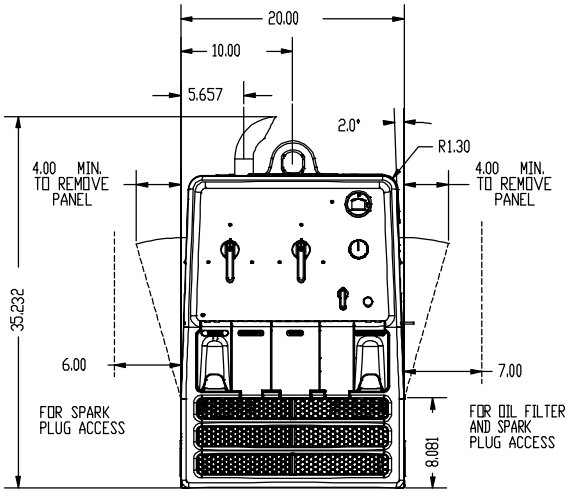

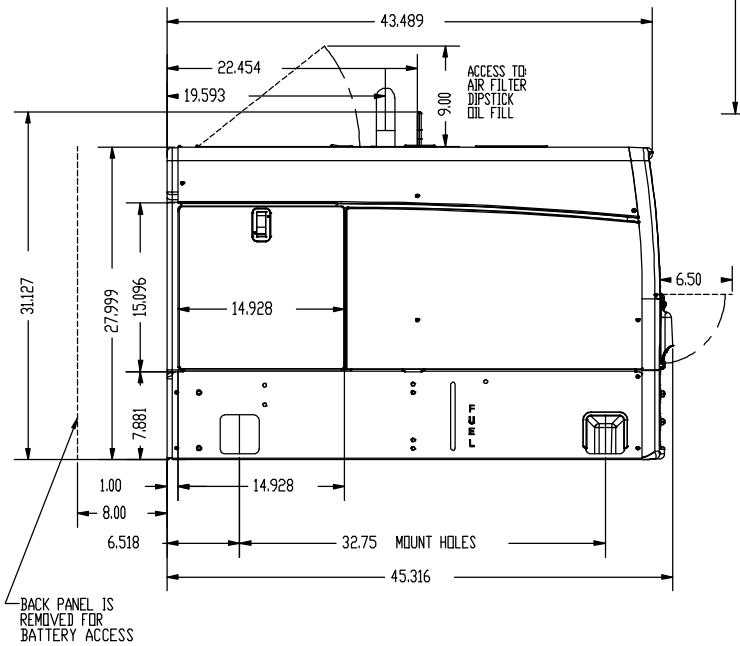

Support Assembly Dimensions

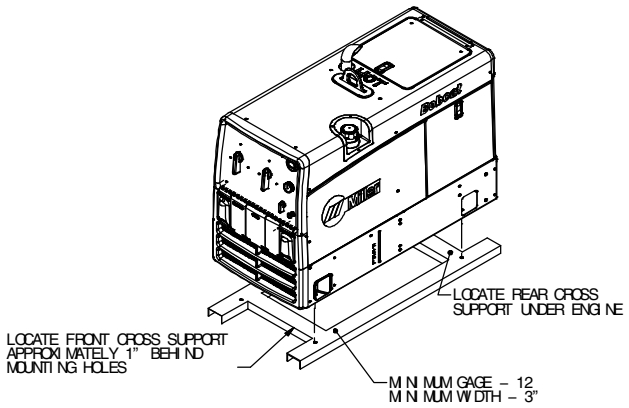

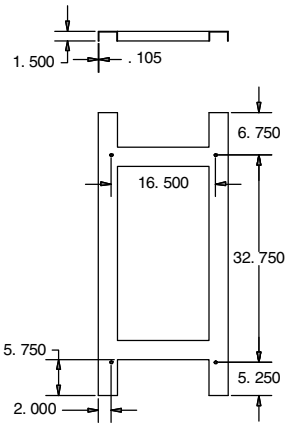

803 572 / Ref 232 769 / 240 844-A

4-4. Fuel Consumption Curves

On a typical job using 1/8 in. 7018 electrodes (125 amps, 20% duty cycle), expect about 20 hours of operation with carbureted engine (24 hours with EFI engine).

Welding at 150 amps at 40% duty cycle uses about 3/4 gallon of fuel per hour. Expect about 16 hours of operation with carbureted engine (19 hours with EFI engine).

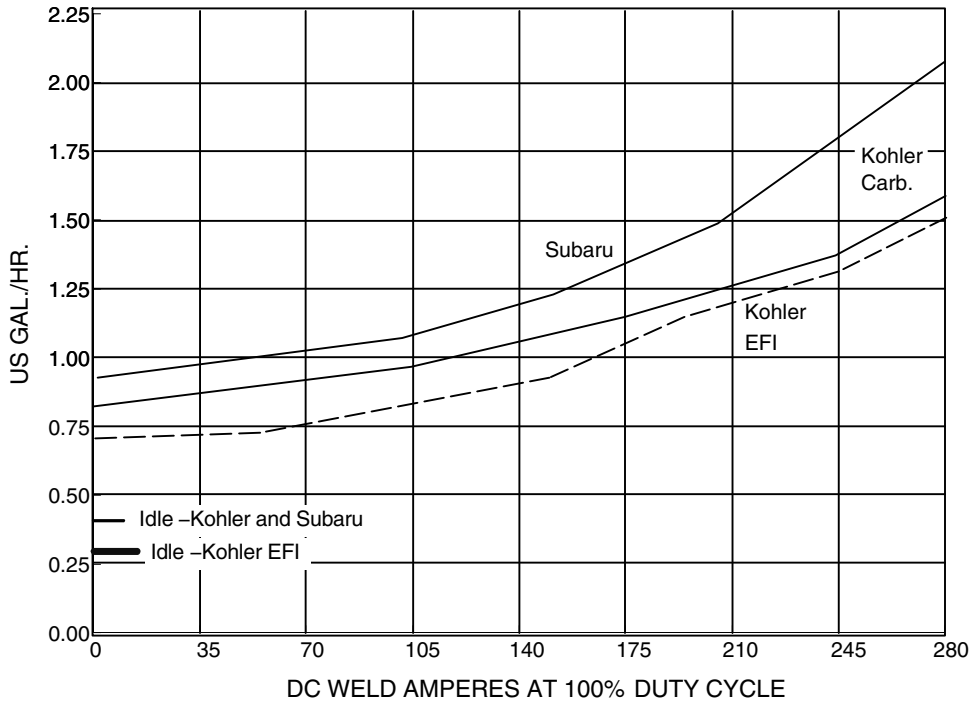

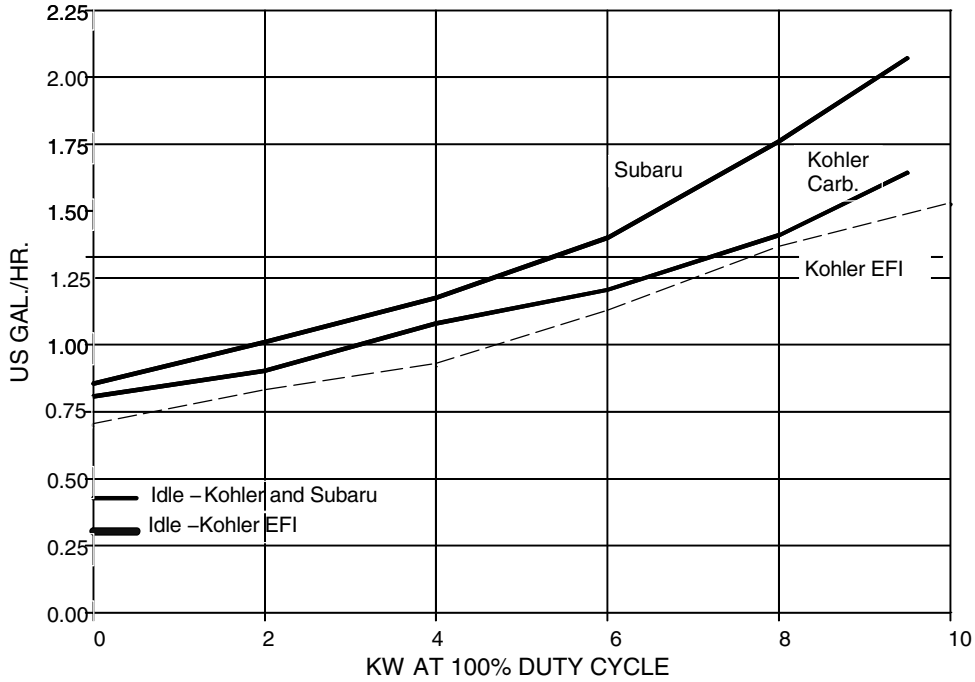

206 135 / 206 136

4-5. Generator Power Curve

The AC generator power curve shows the generator power available in amperes at the receptacles.

Tools and motors are designed to operate within 10% of 120/240 VAC.

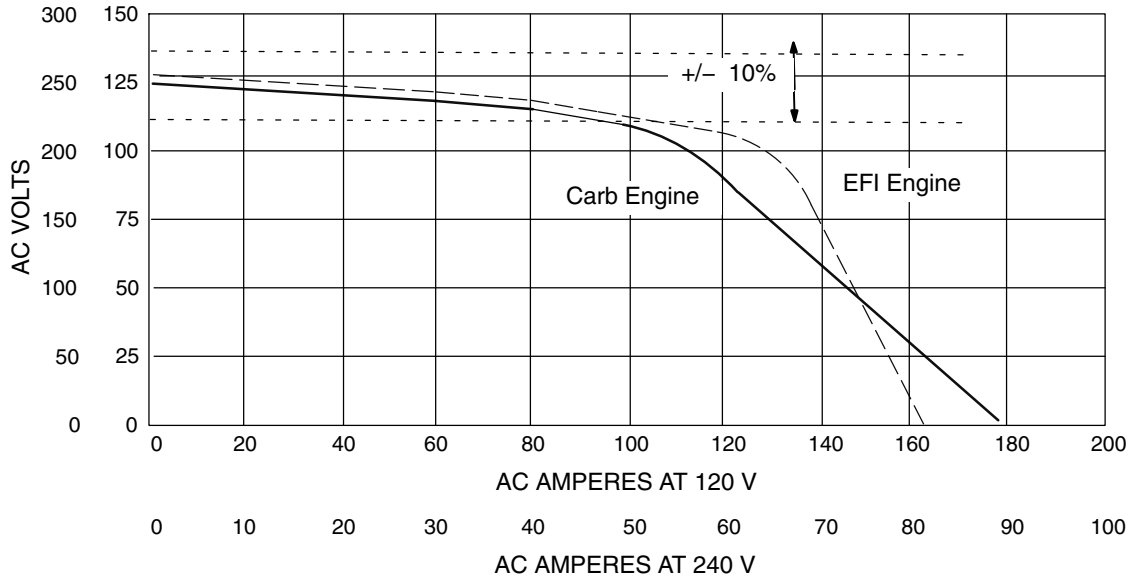

Ref. 220 807–B

4-6. Duty Cycle

100% Duty Cycle at 280 Amperes DC

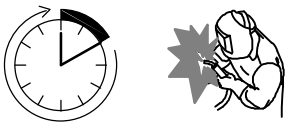

Continuous Welding

Duty cycle is the percentage of 10 minutes that unit can weld at rated load without overheating.

NOTICE *– Exceeding duty cycle can damage unit and void warranty.*

☞ *AC output is not available on all models.*

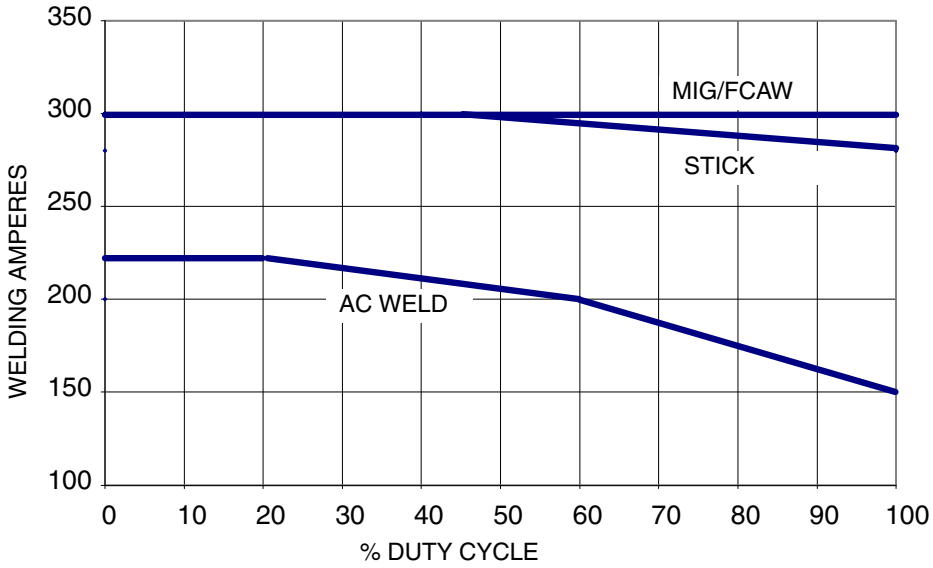

4-7. Stick And MIG Mode Volt-Ampere Curves

The volt-ampere curves show the minimum and maximum voltage and amperage output capabilities of the welding generator. Curves of other settings fall between the curves shown.

A. CC/DC Stick Mode

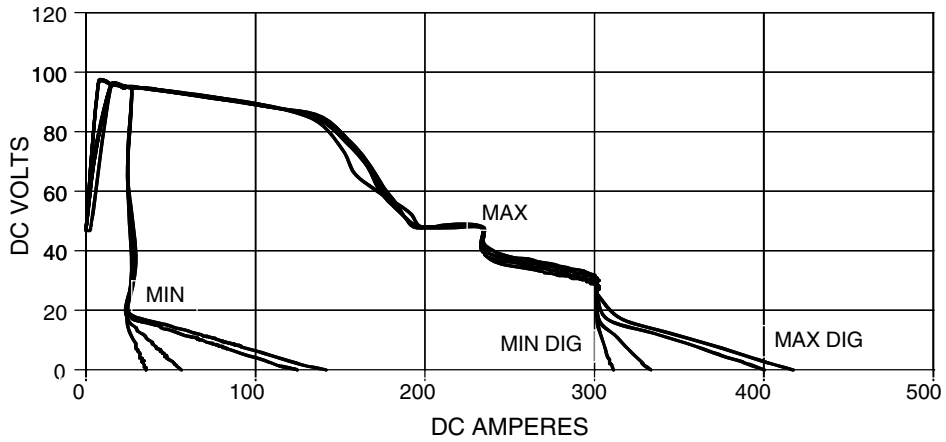

B. CV/DC MIG Mode

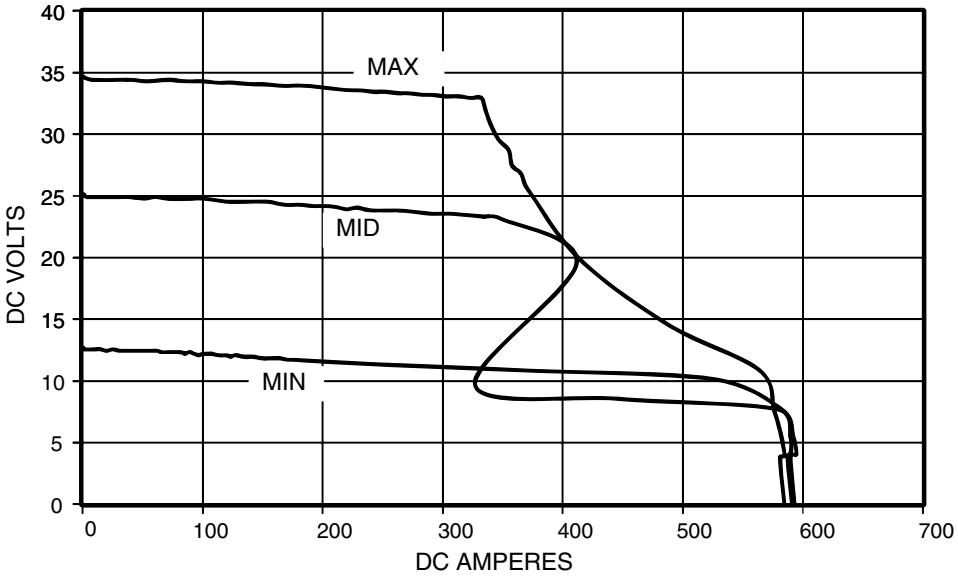

C. CC/AC STICK Mode

☞ *AC output is not available on all models.*

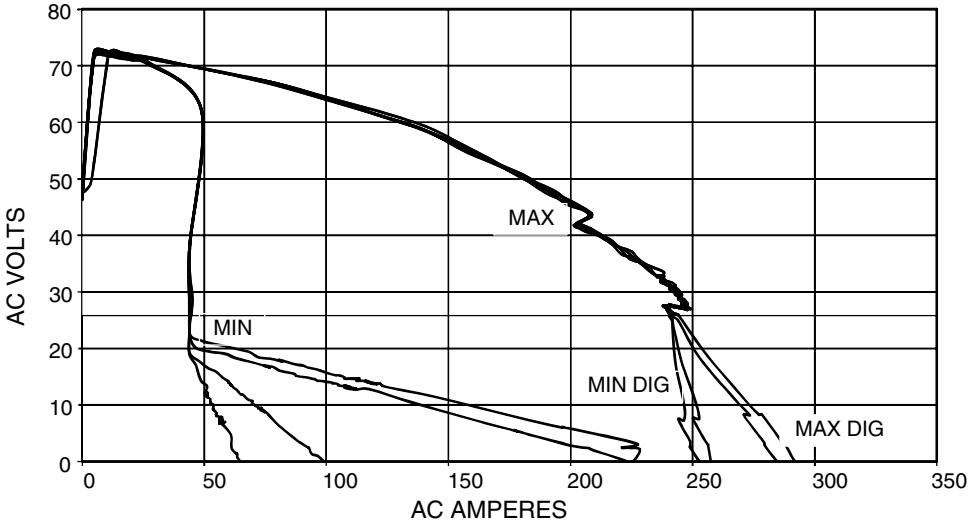

220 310 / 220 313 / 228 631

4-8. TIG Mode Volt-Ampere Curves

The volt-ampere curves show the minimum and maximum voltage and amperage output capabilities of the welding generator. Curves of other settings fall between the curves shown.

☞ *AC output is not available on all models.*

A. CC/AC TIG Mode

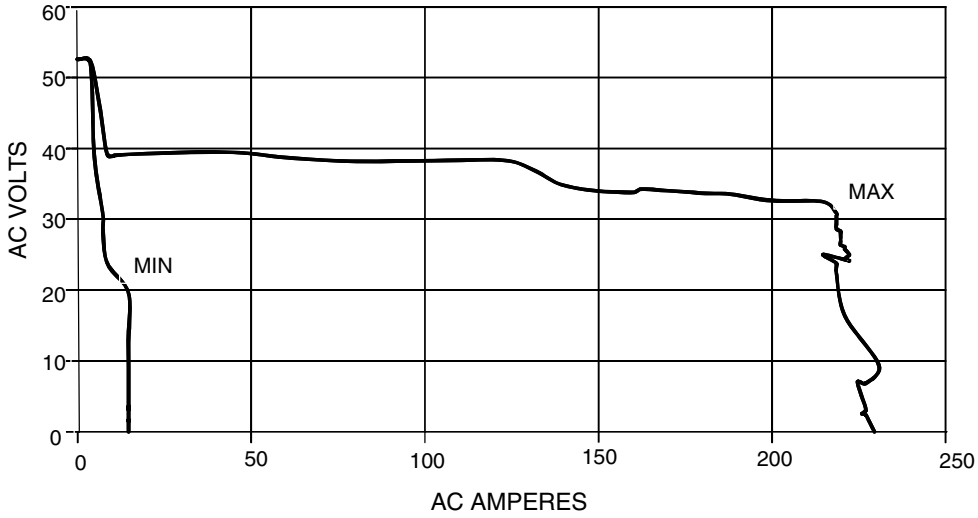

B. CC/DC TIG Mode

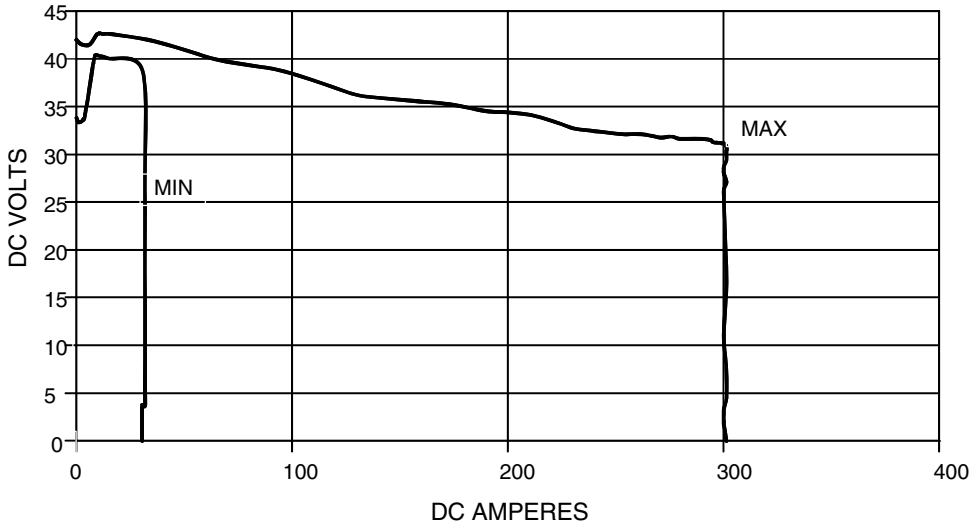

220 312–A / 220 311–A

SECTION 5 – INSTALLATION

5-1. Serial Number And Rating Label Location

The serial number and rating information for this product is located on the back. Use rating label to determine input power requirements and/or rated output. For future reference, write serial number in space provided on back cover of this manual.

5-2. Installing Welding Generator

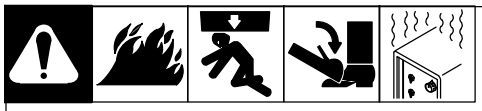

Movement

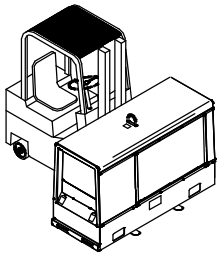

OR

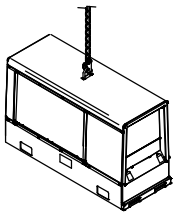

Location / Airflow Clearance

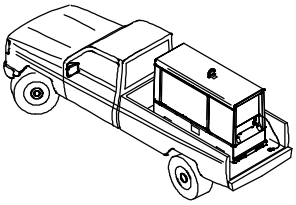

OR

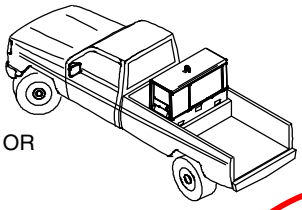

OR

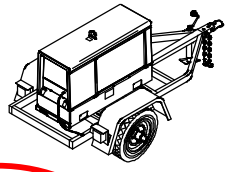

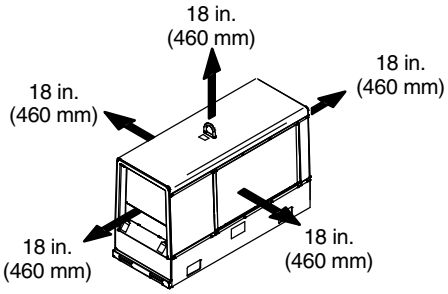

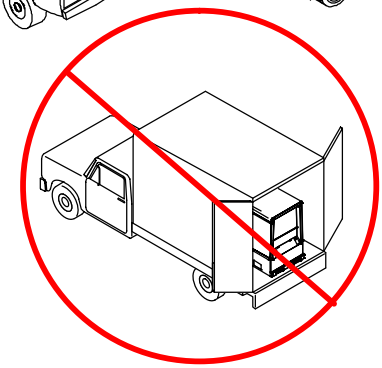

Mounting

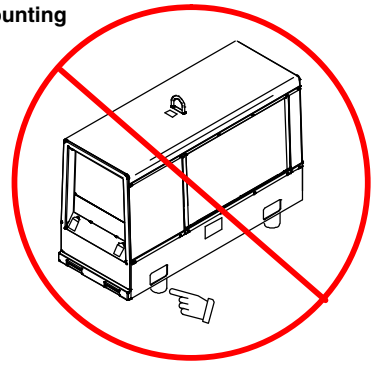

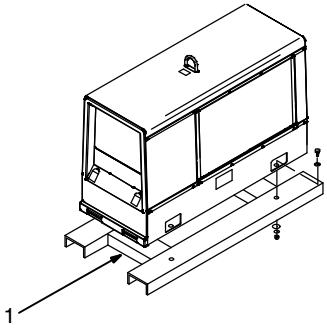

install2 2008-01 – Ref. 800 652 / Ref. 800 477-A / 803 274-A / 804 712

Do not move or operate unit where it could tip.

Do not lift unit from end.

Do not weld on base. Welding on base can cause fuel tank fire or explosion. Bolt unit down using holes provided in base.

Always securely fasten welding generator onto transport vehicle or trailer and comply with all DOT and other applicable codes.

NOTICE *– Do not install unit where air flow is restricted or engine may overheat.*

☞ *See Section 4-3 for lifting eye rating.*

Mounting:

Do not mount unit by supporting the base only at the four mounting holes. Do not use flexible mounts. Use cross-supports to adequately support unit and prevent damage to base.

1 Cross-Supports

Mount unit on flat surface or use cross-supports to support base,see Section 4-3.

5-3. Grounding Generator To Truck Or Trailer Frame

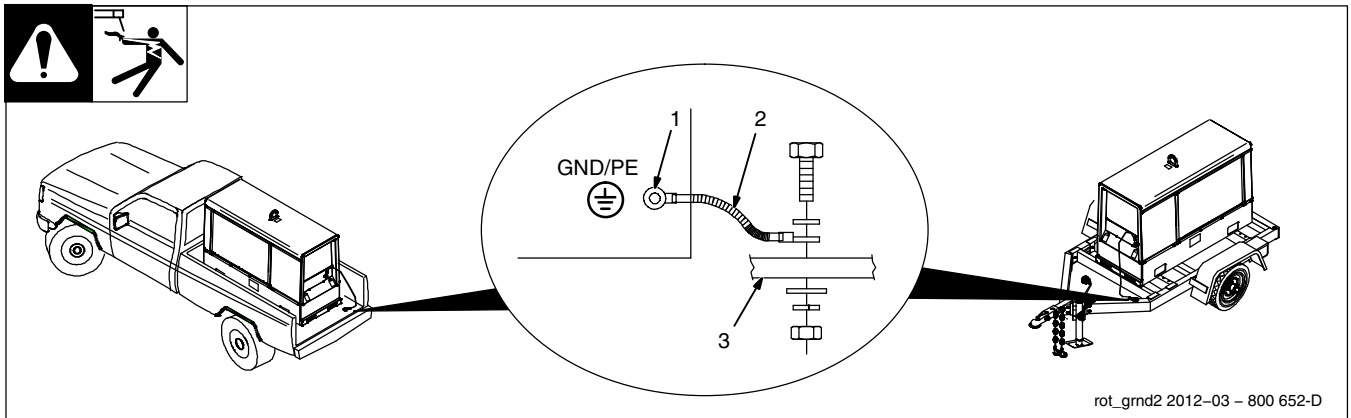

Always ground generator frame to vehicle frame to prevent electric shock and static electricity hazards.

Also see AWS Safety & Health Fact Sheet No. 29, Grounding of Portable And Vehicle Mounted Welding Generators.

Bed liners, shipping skids, and some running gear insulate the welding generator from the vehicle frame. Always connect a ground wire from the generator equipment grounding terminal to bare metal on the vehicle frame as shown.

Use GFCI protection when operating auxiliary equipment. If unit does not have GFCI receptacles, use GFCI-protected extension cord. Do not use GFCI receptacles to power life support equipment.

1 Equipment Grounding Terminal (On Front Panel)

2 Grounding Cable (Not Supplied)

3 Metal Vehicle Frame

Connect cable from equipment ground terminal to metal vehicle frame. Use #8 AWG or larger insulated copper wire.

☞ *Electrically bond generator frame to vehicle frame by metal-to-metal contact.*

5-4. Installing Exhaust Pipe

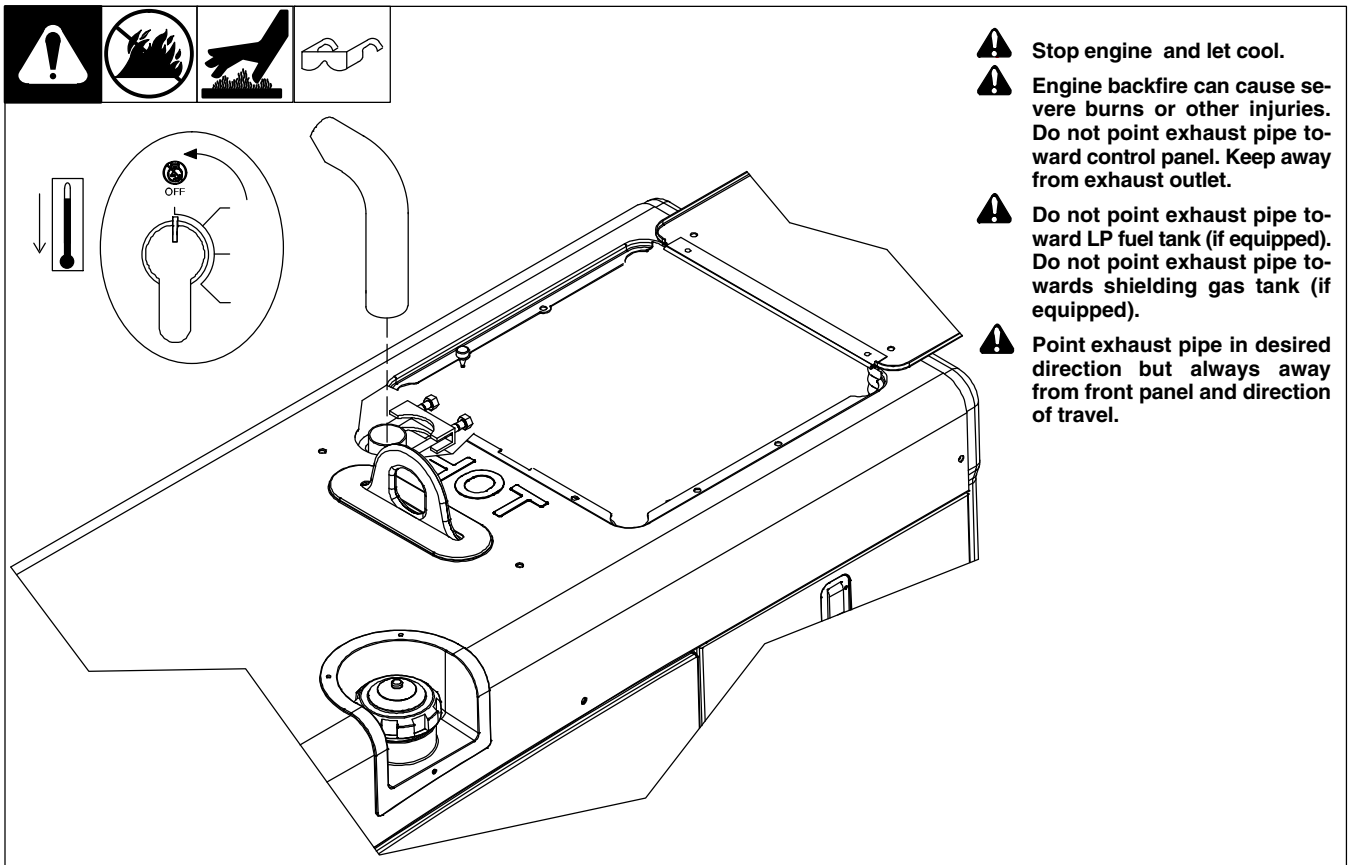

Stop engine and let cool.

Engine backfire can cause severe burns or other injuries. Do not point exhaust pipe toward control panel. Keep away from exhaust outlet.

Do not point exhaust pipe toward LP fuel tank (if equipped). Do not point exhaust pipe towards shielding gas tank (if equipped).

Point exhaust pipe in desired direction but always away from front panel and direction of travel.

Tools Needed:

1/2 in.

Ref. 803 891

5-5. Engine Prestart Checks (Kohler-Powered Units)

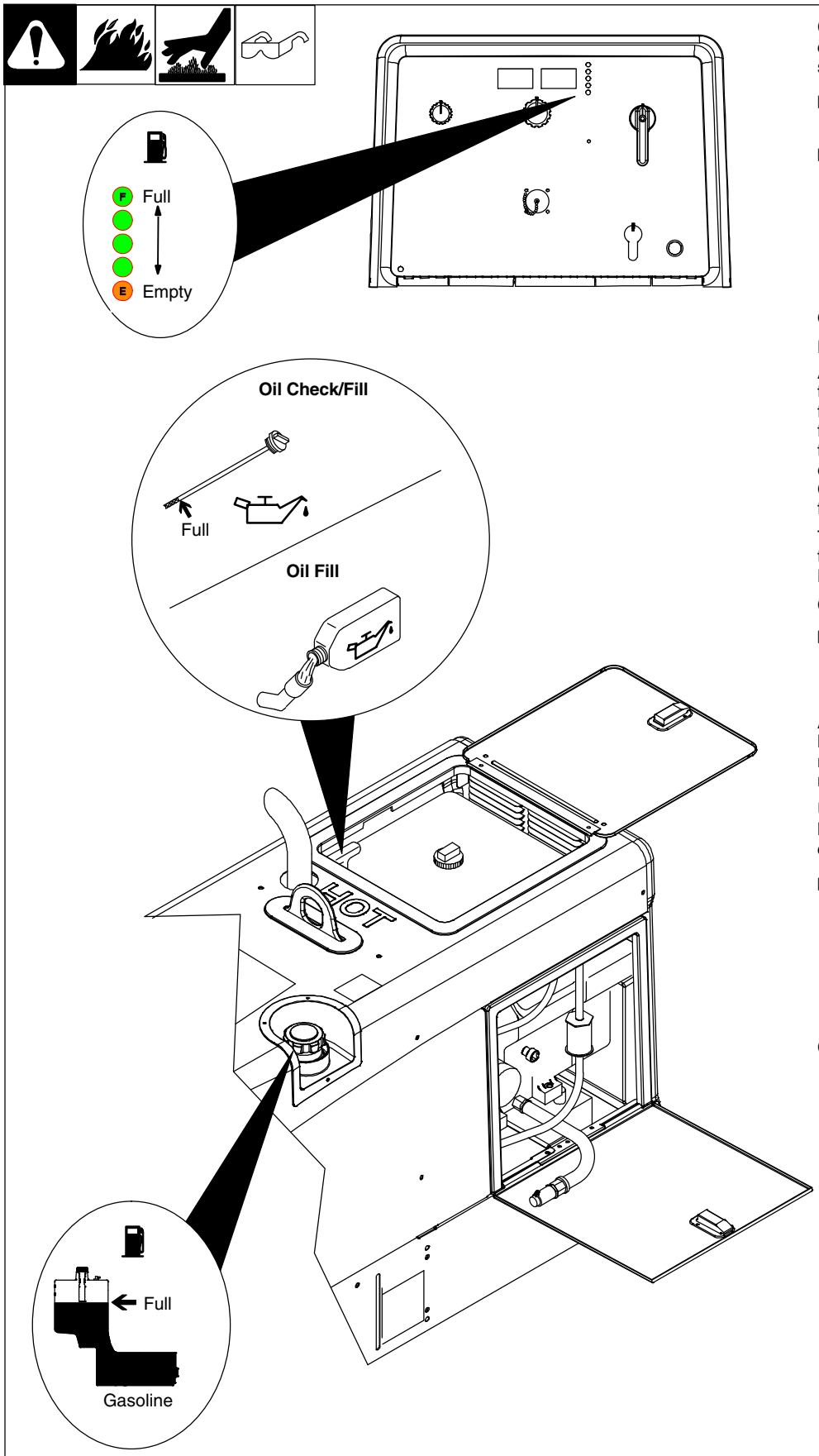

Check all fluids daily. Engine must be cold and on a level surface. Unit is shipped with 10W30 engine oil.

☞ *Follow run-in procedure in engine manual.*

☞ *This unit has a low oil pressure shutdown switch. However, some conditions may cause engine damage before the engine shuts down. Check oil level often and do not use the oil pressure shutdown system to monitor oil level.*

Open top service door

Fuel

Add fresh fuel before starting engine the first time (see maintenance label for specifications). Stop fueling when fuel level reaches neck tube. Do not top off tank. Always leave filler neck empty to allow room for expansion. Check fuel level on a cold engine before use each day.

To check fuel level, turn Engine Control switch to Run/Idle position. LED's indicate fuel level in tank.

Oil

☞ *Do not exceed the "Full" mark on the oil level dipstick. The fuel pump may operate erratically if crankcase is overfilled.*

After fueling, check oil with unit on level surface. If oil is not up to full mark on dipstick, add oil (see maintenance label).

Use front panel meters to determine hours until next recommended oil change (see Section 6-1).

☞ *To improve cold weather starting:*

Keep battery in good condition. Store battery in warm area.

Use correct grade oil for cold weather.

Close top service door

Ref. 803 571–A / Ref. 803 573–A

5-6. Engine Prestart Checks (Subaru-Powered Units)

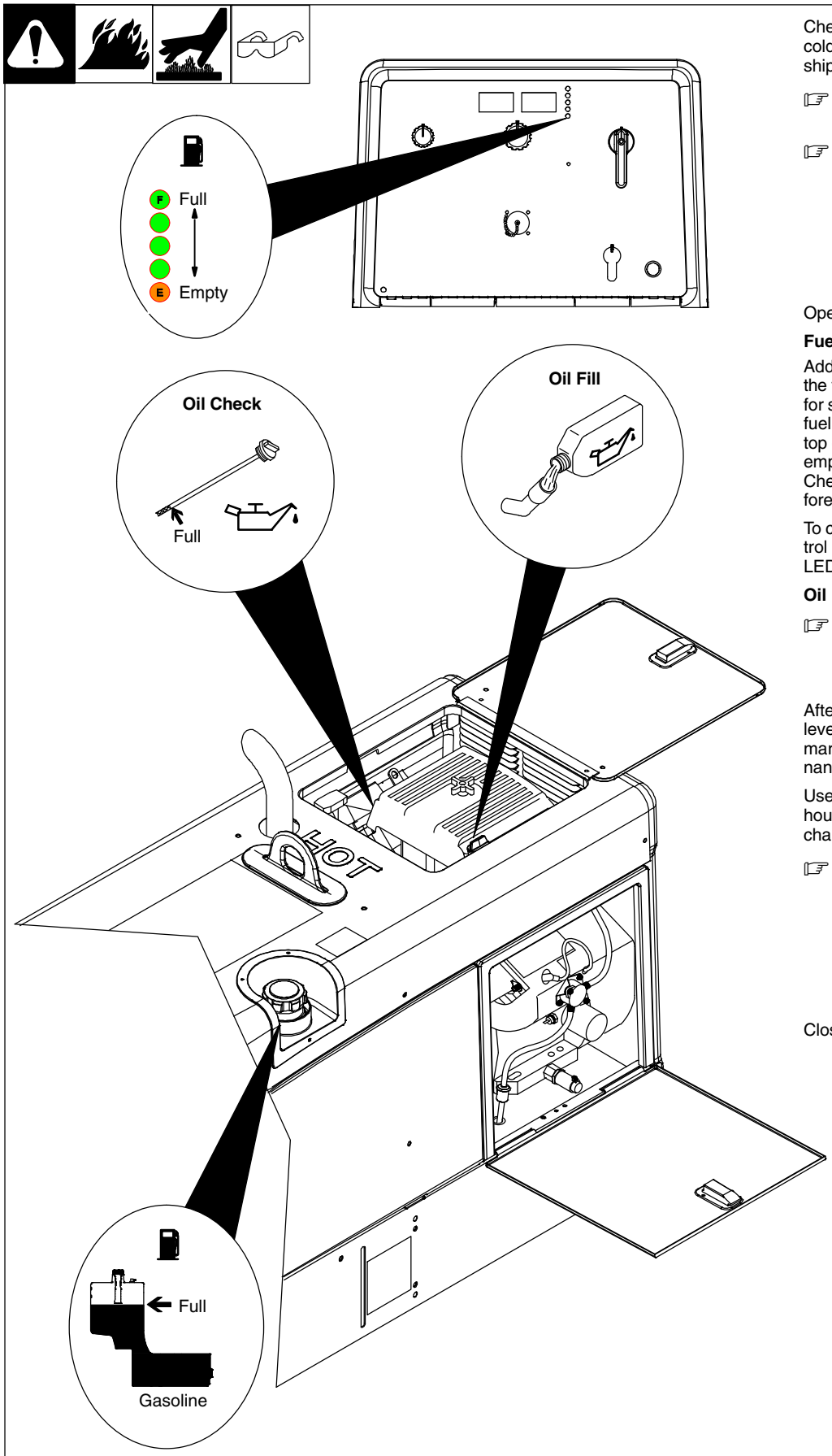

Check all fluids daily. Engine must be cold and on a level surface. Unit is shipped with 10W30 engine oil.

☞ *Follow run-in procedure in engine manual.*

☞ *This unit has a low oil pressure shutdown switch. However, some conditions may cause engine damage before the engine shuts down. Check oil level often and do not use the oil pressure shutdown system to monitor oil level.*

Open top service door.

Fuel

Add fresh fuel before starting engine the first time (see maintenance label for specifications). Stop fueling when fuel level reaches neck tube. Do not top off tank. Always leave filler neck empty to allow room for expansion. Check fuel level on a cold engine before use each day.

To check fuel level, turn Engine Control switch to Run/Idle position. LED's indicate fuel level in tank.

Oil

☞ *Do not exceed the "Full" mark on the oil level dipstick. The fuel pump may operate erratically if crankcase is overfilled.*

After fueling, check oil with unit on level surface. If oil is not up to full mark on dipstick, add oil (see maintenance label).

Use front panel meters to determine hours until next recommended oil change (see Section 6-1).

☞ *To improve cold weather starting:*

Keep battery in good condition. Store battery in warm area.

Use correct grade oil for cold weather.

Close top service door.

Ref. 803 571–A / Ref. 803 572–C

5-7. Connecting Or Replacing The Battery

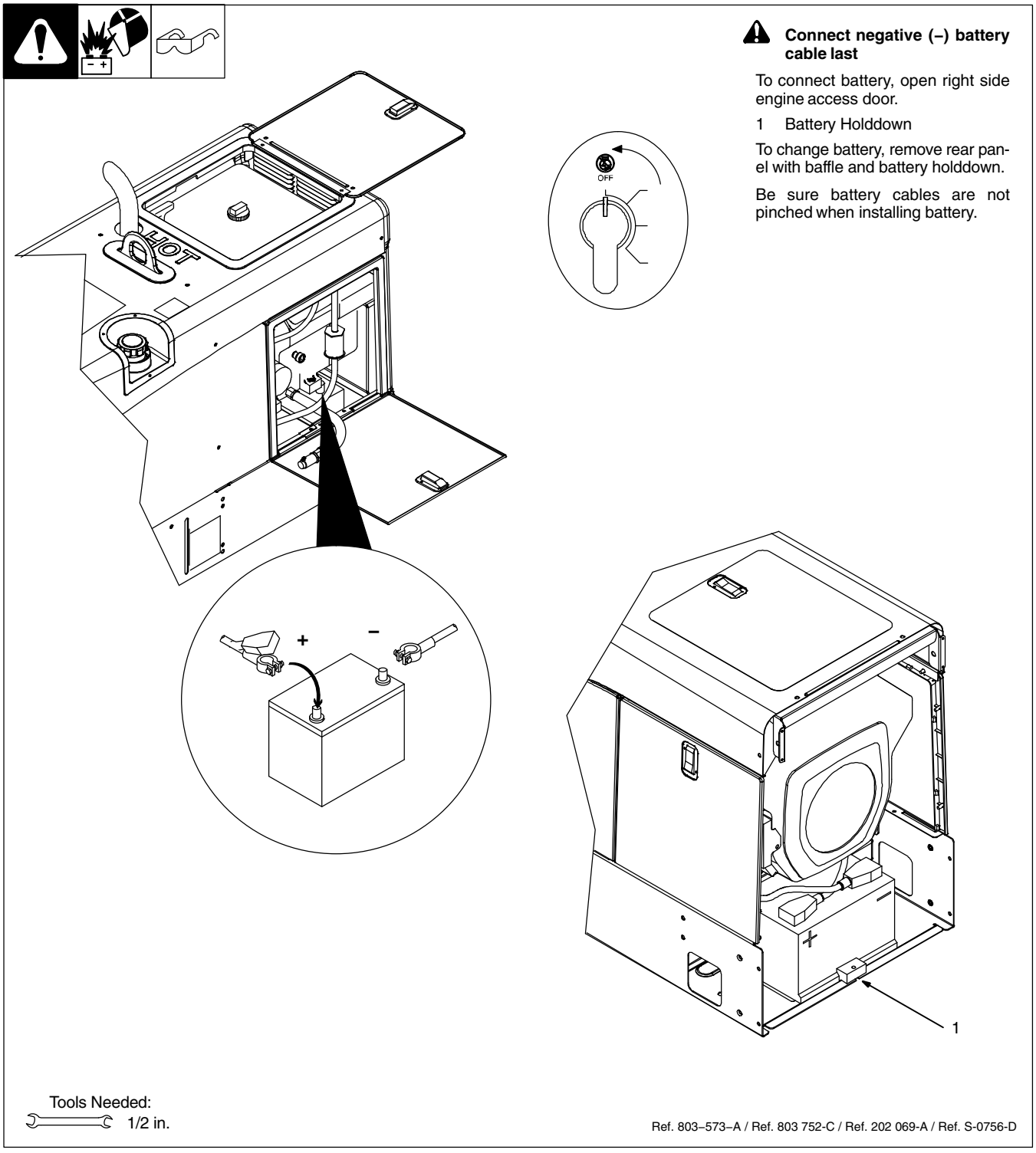

Connect negative (–) battery cable last

To connect battery, open right side engine access door.

1 Battery Holddown

To change battery, remove rear panel with baffle and battery holddown.

Be sure battery cables are not pinched when installing battery.

Tools Needed:
1/2 in.

Ref. 803–573–A / Ref. 803 752-C / Ref. 202 069-A / Ref. S-0756-D

5-8. Electronic Fuel Injection (EFI) System And Battery Information

NOTICE *– EFI system components can be damaged if these precautions are not followed:*

- Do not allow the battery cables to touch opposing terminals. When connecting the battery cables attach the positive (+) cable to the positive (+) battery terminal first, followed by negative (–) cable to negative (–) battery terminal.
- Never start the engine when the cables are loose or poorly connected to the battery terminals.
- Never disconnect the battery while the engine is running.
- Never use a quick battery charger to start the engine.
- Do not charge battery with Engine Control switch On.
- Always disconnect the negative (–) battery cable before charging battery.

5-9. Weld Output Terminals

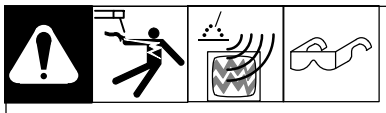

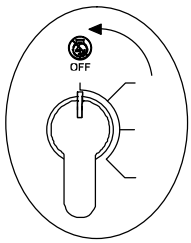

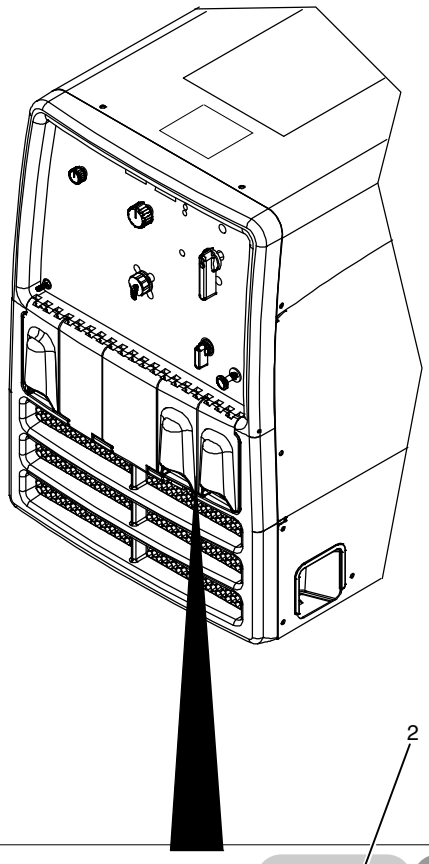

Stop engine.

Do not connect to CC and CV terminals at the same time.

AC/DC Models:

1 Work Weld Output Terminal

2 Stick/TIG (CC) Weld Output Terminal

3 Wire /CV Weld Output Terminal

For MIG welding, connect work cable to Work terminal and wire feeder cable to Wire (CV) terminal.

For Stick/TIG welding, connect work cable to Work terminal and electrode holder/TIG torch cable to Stick/TIG (CC) terminal.

DC Models:

4 Negative (–) Weld Output Terminal

5 Stick/TIG (+) Weld Output Terminal

6 Wire (+) Weld Output Terminal

For MIG welding, connect work cable to Negative (–) terminal and wire feeder cable to CV (Wire) terminal.

For Stick welding, connect work cable to Negative (–) terminal and electrode holder cable to CC (Stick/TIG) terminal.

For TIG welding, connect work cable to CC (Stick/TIG) terminal and electrode holder cable to Negative (–) terminal.

☞ *Weld output terminals on units with AC/DC output.*

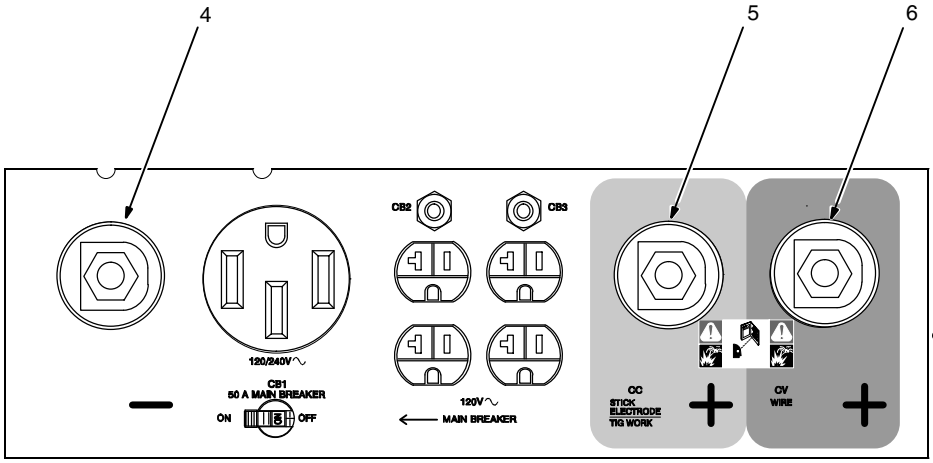

☞ *Weld output terminals on units with DC output only.*

803 571 / Ref. 287 062 / 204 353 / Ref. 287 121

5-10. Connecting To Weld Output Terminals

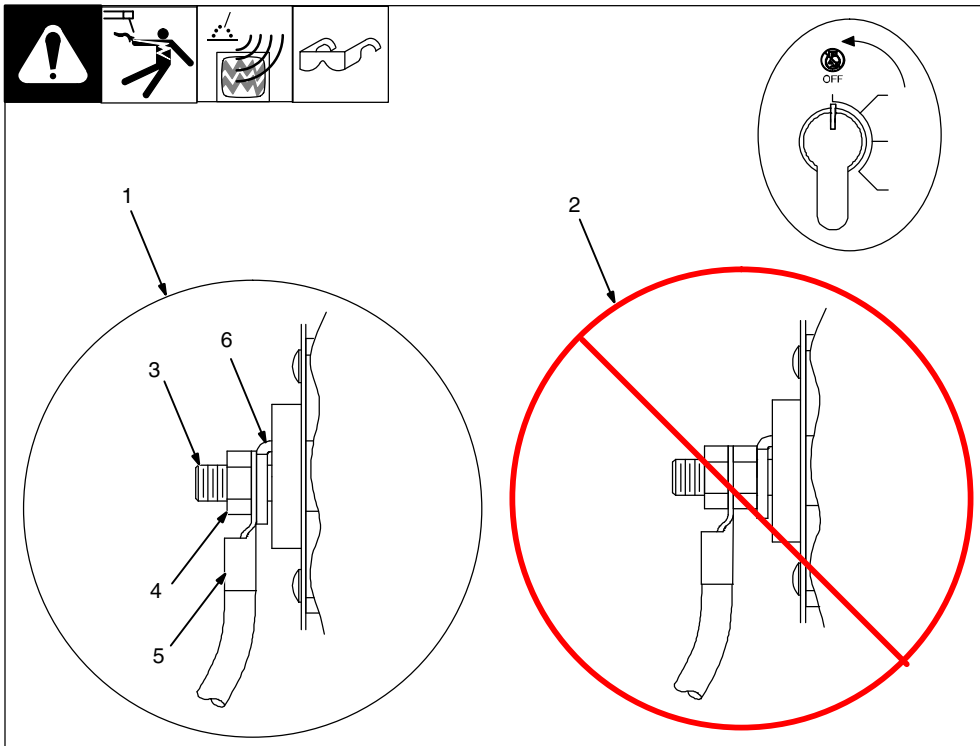

Stop engine.

Failure to properly connect weld cables may cause excessive heat and start a fire, or damage your machine.

☞ *Do not place anything between weld cable terminal and copper bar. Make sure that the surfaces of the weld cable terminal and copper bar are clean.*

1 Correct Weld Cable Connection
2 Incorrect Weld Cable Connection
3 Weld Output Terminal
4 Supplied Weld Output Terminal Nut
5 Weld Cable Terminal
6 Copper Bar

Remove supplied nut from weld output terminal. Slide weld cable terminal onto weld output terminal and secure with nut so that weld cable terminal is tight against copper bar.

Tools Needed:

3/4 in.

803 778-B

5-11. Selecting Weld Cable Sizes*

NOTICE *– The Total Cable Length in Weld Circuit (see table below) is the combined length of both weld cables. For example, if the power source is 100 ft (30 m) from the workpiece, the total cable length in the weld circuit is 200 ft (2 cables x 100 ft). Use the 200 ft (60 m) column to determine cable size.*

Weld Output Terminals

Turn off power before connecting to weld output terminals.

Do not use worn, damaged, undersized, or poorly spliced cables.

Welding Amperes	Weld Cable Size** and Total Cable (Copper) Length in Weld Circuit Not Exceeding***							
	100 ft (30 m) or Less		150 ft (45 m)	200 ft (60 m)	250 ft (70 m)	300 ft (90 m)	350 ft (105 m)	400 ft (120 m)
	10 – 60% Duty Cycle AWG (mm^2)	60 – 100% Duty Cycle AWG (mm^2)	10 – 100% Duty Cycle AWG (mm^2)					
100	4 (20)	4 (20)	4 (20)	3 (30)	2 (35)	1 (50)	1/0 (60)	1/0 (60)
150	3 (30)	3 (30)	2 (35)	1 (50)	1/0 (60)	2/0 (70)	3/0 (95)	3/0 (95)
200	3 (30)	2 (35)	1 (50)	1/0 (60)	2/0 (70)	3/0 (95)	4/0 (120)	4/0 (120)
250	2 (35)	1 (50)	1/0 (60)	2/0 (70)	3/0 (95)	4/0 (120)	2x2/0 (2x70)	2x2/0 (2x70)
300	1 (50)	1/0 (60)	2/0 (70)	3/0 (95)	4/0 (120)	2x2/0 (2x70)	2x3/0 (2x95)	2x3/0 (2x95)
350	1/0 (60)	2/0 (70)	3/0 (95)	4/0 (120)	2x2/0 (2x70)	2x3/0 (2x95)	2x3/0 (2x95)	2x4/0 (2x120)
400	1/0 (60)	2/0 (70)	3/0 (95)	4/0 (120)	2x2/0 (2x70)	2x3/0 (2x95)	2x4/0 (2x120)	2x4/0 (2x120)

* This chart is a general guideline and may not suit all applications. If cable overheats, use next size larger cable.

**Weld cable size (AWG) is based on either a 4 volts or less drop or a current density of at least 300 circular mils per ampere.
( ) = mm^2 for metric use

***For distances longer than those shown in this guide, call a factory applications rep. at 920-735-4505 (Miller) or 1-800-332-3281 (Hobart).

Ref. S-0007-J 2011–07

5-12. Remote Receptacle Information

☞ *Engine runs at weld/power speed whenever a device connected to the remote receptacle is running.*

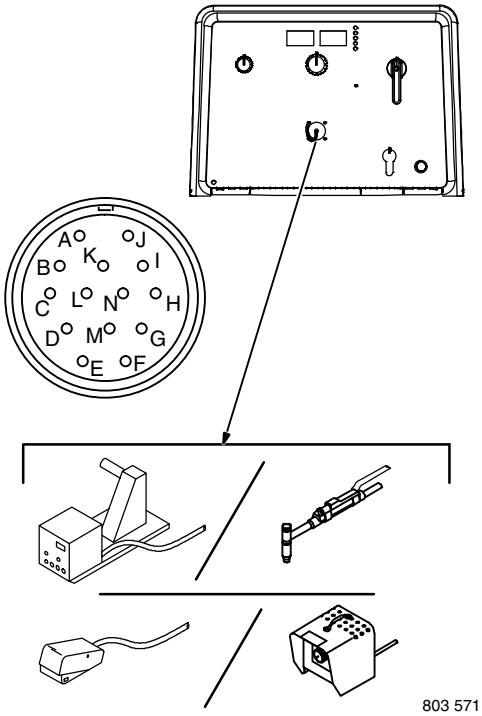

REMOTE 14	Socket*	Socket Information
24 VOLTS AC OUTPUT (CONTACTOR)	A	24 volts AC. Protected by supplementary protector CB4.
	B	Contact closure to A completes 24 volt AC contactor control circuit and keeps engine at Run speed in all Wire modes.
115 VOLTS AC OUTPUT (CONTACTOR)	I	115 volts AC. Protected by supplementary protector CB3.
	J	Contact closure to I completes 115 volts AC contactor control circuit.
REMOTE OUTPUT CONTROL	C	+10 volts DC output to remote control.
	D	Remote control circuit common.
	E	0 to +10 volts DC input command signal from remote control.
A/V AMPERAGE VOLTAGE	F	Current feedback: 1 volt per 100 amperes.
	H	Voltage feedback: 1 volt per 10 arc volts.
GND	G	Circuit common for 24 and 115 volts AC circuits.
	K	Chassis common.

*The remaining sockets are not used.

Notes

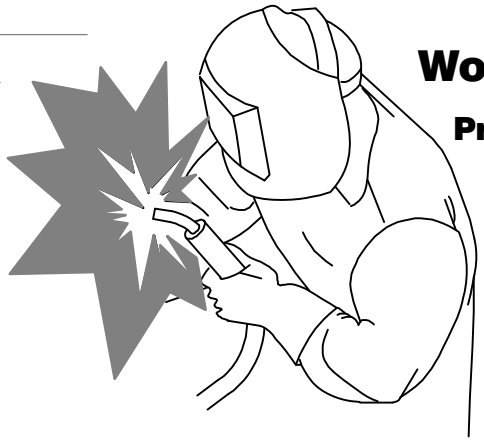

Work like a Pro!

Pros weld and cut safely. Read the safety rules at the beginning of this manual.

SECTION 6 – OPERATING WELDING GENERATOR

6-1. Front Panel Controls (See Section 6-2)

METER MAINTENANCE FUNCTIONS

- **HOUR METER:** with engine off, place Engine Control switch in RUN position to view engine hours.
- **OIL CHANGE INTERVAL:** with engine off, place Engine Control switch into the RUN/IDLE position to see hours before next oil change. Oil hours start at 100 and count down to 0 (oil change due).
  NOTE: Negative hours indicated when past recommended oil change interval.
  TO RESET: Cycle Engine Control switch from the RUN/IDLE to RUN position 3 times.
- **ENGINE RPM's:** With engine running and the Process Selector switch in any Stick HOT position, cycle Engine Control switch from the RUN/IDLE to RUN position 3 times and meters will display Engine RPM's. Use to check and set both idle and run speed RPM's. Accuracy is ±16 RPM's. Turn machine off to reset display.

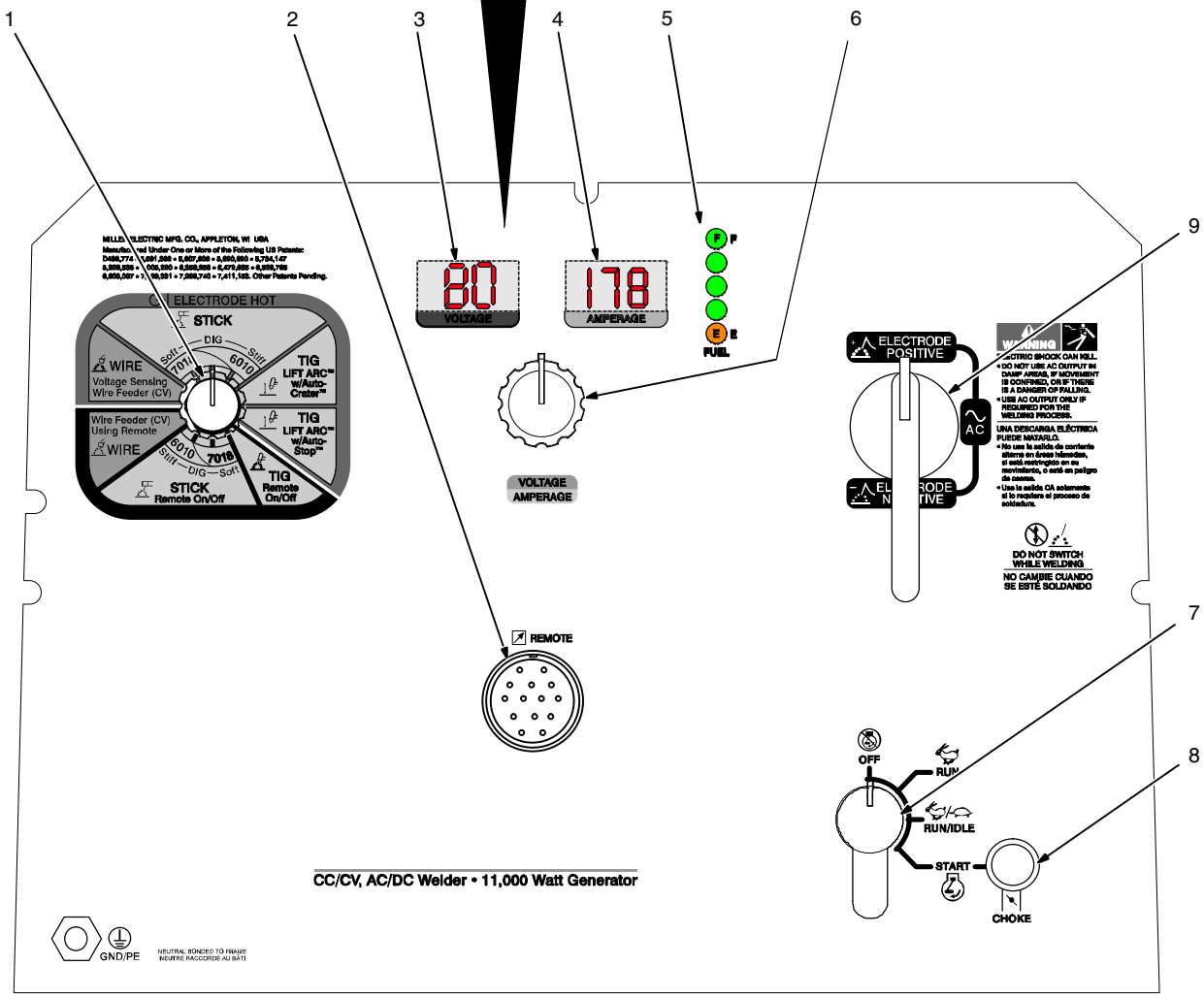

Ref. 287 062 / Ref. 227 723-A

6-2. Description Of Front Panel Controls (See Section 6-1)

1 Process/Contactor Switch

See Section 6-4 for Process/Contactor switch information.

2 Remote Receptacle

Use receptacle to connect remote control or wire feeder.

When a remote voltage/amperage control is connected to the Remote receptacle, the Auto Sense Remote feature automatically switches voltage/amperage control to the remote control (see Sections 5-12 and 6-7).

With remote voltage/amperage control connected, weld output in CC mode is determined by a combination of front panel and remote control voltage/amperage settings. In CV mode, weld output is controlled through remote control only.

If no remote voltage/amperage control is connected to the Remote receptacle, the front panel Voltage/Amperage control adjusts voltage and amperage.

3 And 4 Displays

Displays can show weld process information (voltage and amperage) or maintenance information (hourmeter, oil change countdown, or rpm).

Meter Weld Functions: In Wire modes, Voltmeter displays preset weld voltage when not welding. Meters display actual voltage and amperage when welding and for five seconds after welding has stopped.

In Stick and TIG modes, Voltmeter reads ON and Ammeter displays preset amperage when not welding. Meters display actual voltage and amperage when welding and for five seconds after welding has stopped.

Meter Engine Maintenance Functions: See inset from maintenance label.

5 Fuel Level Indicator

With Engine running or Engine Control switch in Run or Run/Idle position, LED's indicate fuel left in tank.

6 Voltage/Amperage Control

Use control to select weld voltage or amperage. Control may be adjusted while welding.

With Process/Contactor switch in any Stick or TIG setting, use control to adjust amperage. With Process/Contactor switch in any Wire position, use control to adjust voltage. When a remote voltage/amperage control is connected to Remote receptacle RC4, control sets the maximum amperage in Stick and TIG modes, but has no effect in MIG modes.

7 Engine Control Switch

Use switch to start engine, select speed, and stop engine. In Run/Idle position, engine runs at idle speed at no load, and weld/power speed under load. In Run position, engine runs at weld/power speed.

Use switch in combination with meters to determine total engine hours and hours until next recommended oil change (see items 3 and 4 earlier in this section).

☞ *The unit will not return to idle speed when the remote contactor is on and Process/Contactor switch is in any Wire position. The unit will return to idle speed in all other modes.*

8 Engine Choke Control (Carbureted Engines Only)

Use control to change engine air-fuel mix when starting engine.

To Start: pull out choke (if equipped) and turn Engine Control switch to Start position. Release switch when engine starts. Slowly push in choke (if equipped).

☞ *If the engine does not start, let the engine come to a complete stop before attempting restart.*

☞ *During cold weather some gasoline engines encounter difficulties that are easily remedied. See Section 6-3 and 8-14.*

To Stop: turn Engine Control switch to Off position.

9 DC Polarity/AC Switch (AC/DC Models Only)

⚠ **Do not switch under load.**

Use switch to select AC weld output or polarity of DC weld output.

6-3. Cold Weather Engine Operation

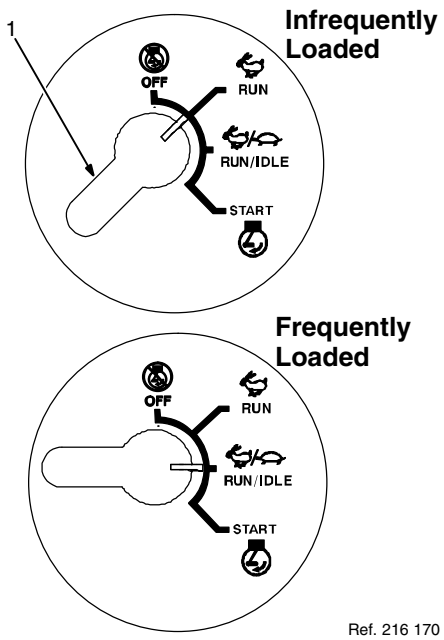

Ref. 216 170

1 Engine Control Switch

Carburetor Icing

Carburetor icing causes the unit to drop below the normal idle speed and then stall. This condition occurs when the temperature is near freezing and the relative humidity is high. Ice forms on the throttle plate and inner bore of the carburetor. The engine typically restarts without problems but soon stalls again.

- Treat gasoline with a fuel de–icer product (isopropyl alcohol).
- Place the Engine Control switch in the Run position.
- Run engine only when expecting to frequently load it.

Breather Icing

Oil breather/pulse line icing occurs in severe cold (continuously below 0°F). Moisture accumulates in the oil from piston ring blow–by if the engine is extensively idled. This may cause vacuum line freezing, oil breather tube freezing or ice in the carburetor. All of these cause operating problems. Due to ice in the lines, the engine may not restart until it is warmed to above freezing.

- Load engine and reduce idle times to prevent engine shutdowns.
- Use an electric fuel pump to avoid pulse line freezing.
- Install engine cold–weather kit.

Both Kohler (1-800-544-2444) and Subaru (1-800-277-6246) offer kits for cold weather operation. The user can install these kits. Both kits pull heated air from the muffler surface into the carburetor and shut the cold air off. This increases engine temperature during operation in both idle and high speed.

☞ *When the ambient temperatures become warmer (above 45°F) the air flow will have to be returned to normal.*

6-4. Process/Contactor Switch On AC/DC Models

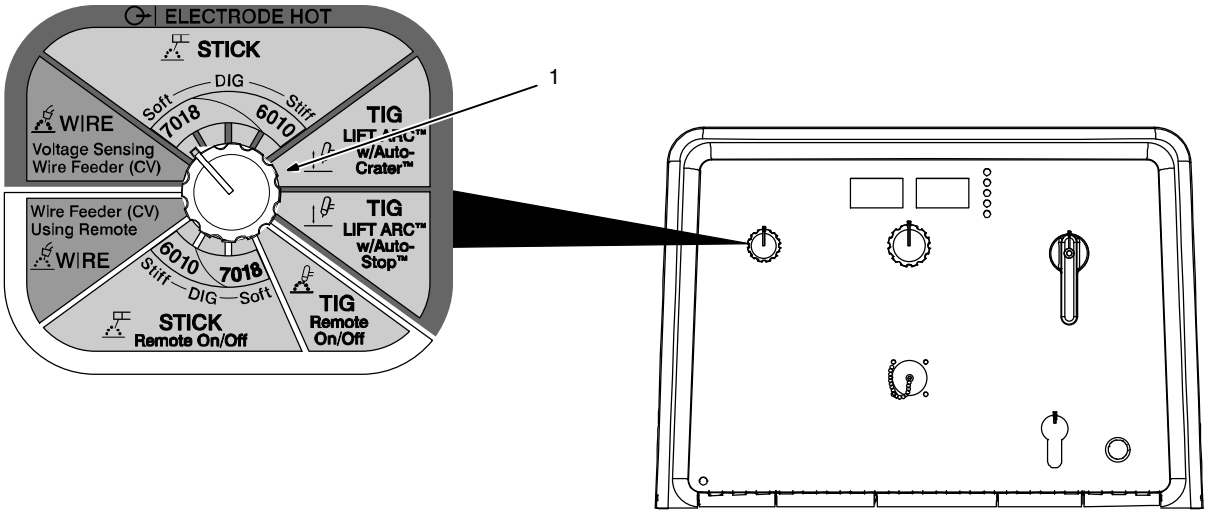

803 571–A /287 062–A

1 Process/Contactor Switch

Weld output terminals are energized when Process/Contactor switch is in an Electrode Hot position and the engine is running.

☞ *The unit will not return to idle speed when Process/Contactor switch is in a Wire position and the remote contactor is on (closure between pins A and B on remote receptacle).*

Use switch to select weld process and weld output on/off control (see Table 6-1 and Section 5-12).

Place switch in Remote positions to turn weld output on and off with a device connected to the remote receptacle.

Place switch in Electrode Hot positions for weld output to be on whenever the engine is running.

Wire Positions:

Use Wire positions for MIG welding using a voltage sensing wire feeder (Electrode Hot) or wire feeder using remote control.

Stick Positions:

Use Stick positions for stick (SMAW) and air carbon arc (CAC-A) cutting and gouging.

Stick Electrode Hot:

When switch is in a Stick Electrode Hot mode, select one of four dig settings to provide additional amperage during short arc length conditions and help prevent electrodes from “sticking”. See Stick position descriptions following (reading L to R):

Soft Arc (E 7018) - This setting provides a low dig/arc force setting for smooth weld performance. A stable weld puddle with little arc “snap” gives excellent weld bead appearance with minimal spatter.

Medium Soft Arc - This setting provides a low to medium dig/arc force that gives a slightly more fluid weld puddle, more arc “snap”, and reduces the potential for electrode sticking at shorter arc lengths.

Medium Stiff Arc - This setting provides medium dig/arc force for open root vertical up joints or joints that do not require additional current for fit up inconsistencies.

Stiff Arc (E6010) - This setting provides a high dig/arc force for open root vertical down joints where additional current is needed to compensate for tight joint fit up without the need to increase overall welding current. This setting is recommended for those who prefer a very stiff arc with 6010 electrodes.

Stick Remote On/Off:

When switch is in a Stick Remote On/Off mode, select one of three settings to provide additional amperage during short arc length conditions and help prevent electrodes from “sticking”. See Stick position descriptions following (reading R to L):

Soft Arc (E7018) - This setting provides a low to medium dig/arc force that gives a slightly more fluid weld puddle, more arc “snap”, and reduces the potential for electrode sticking at shorter arc lengths.

Medium Arc - This setting provides medium dig/arc force for open root vertical up joints or joints that do not require additional current for fit up inconsistencies.

Stiff Arc (E6010) - This setting provides a high dig/arc force for open root vertical down joints where additional current is needed to compensate for tight joint fit up without the need to increase overall welding current. This setting is recommended for those who prefer a very stiff arc with 6010 electrodes.

The dig circuit is disabled when switch is in Wire or TIG positions.

TIG Positions:

TIG – Remote On/Off – Use this position for AC or DC TIG welding using remote on/off control.

Electrode Hot – Lift-Arc™ w/Auto Crater™ TIG (DC only) - With switch in this position, a low voltage (10 V DC) is present between the electrode and workpiece preventing overheating, sticking, or contamination of the electrode (see Section 6-6) as the arc is struck.

End the arc using the Auto-Crater feature (see Section 6-6).

Electrode Hot – Lift-Arc™ w/Auto Stop™ TIG (DC only) - With switch in this position, a low voltage (10 V DC) is present between the electrode and workpiece preventing overheating, sticking, or contamination of the electrode (see Section 6-6) as the arc is struck.

End the arc using the Auto-Stop feature (see Section 6-6).

Table 6-1. Process/Contactor Switch Settings

Switch Setting	Process	Output On/Off Control
Electrode Hot – Wire	MIG (GMAW)	Electrode Hot
Electrode Hot – Stick	Stick (SMAW) Select Preferred Dig	Electrode Hot
Electrode Hot – Stick	Air Carbon Arc (CAC-A) Cutting And Gouging Select Any Dig	Electrode Hot
Electrode Hot – Lift Arc w/Auto-Crater	TIG (GTAW) Lift Arc w/Auto-Crater (GTAW) (DC Only)	Electrode Hot
Electrode Hot – Lift Arc w/Auto-Stop	TIG (GTAW) Lift Arc w/Auto-Stop (GTAW) (DC Only)	Electrode Hot
TIG – Remote On/Off	TIG (GTAW) With HF Unit, Pulsing Device, Or Remote Control (AC or DC)	At Remote Receptacle
Stick – Remote On/Off	Stick (SMAW) With Remote On/Off	At Remote Receptacle
Wire – Wire Feeder (CV) Using Remote	MIG (GMAW)	At Remote Receptacle

6-5. Stick Start Procedure – Scratch Start Technique

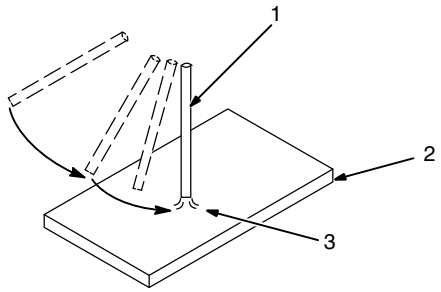

With Stick selected, start arc as follows:

1 Electrode

2 Workpiece

3 Arc

Drag electrode across workpiece like striking a match; lift electrode slightly after touching work. If arc goes out electrode was lifted to high. If electrode sticks to workpiece, use a quick twist to free it.

6-6. Lift-Arc™ TIG With Auto-Crater™ And Auto-Stop™

Arc Start With Lift-Arc

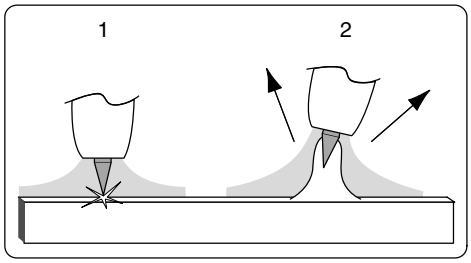

Arc End With Auto-Crater

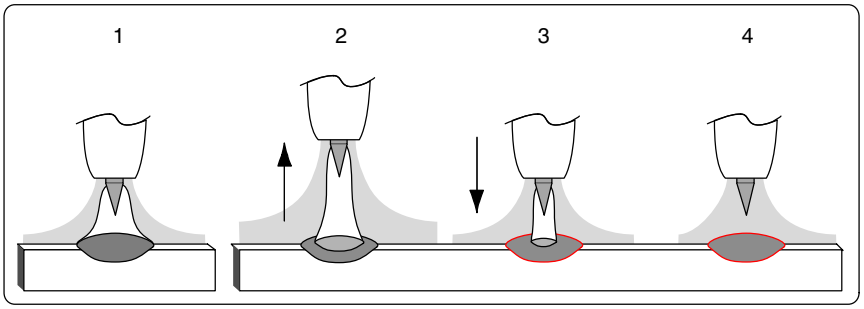

OR

Arc End With Auto-Stop

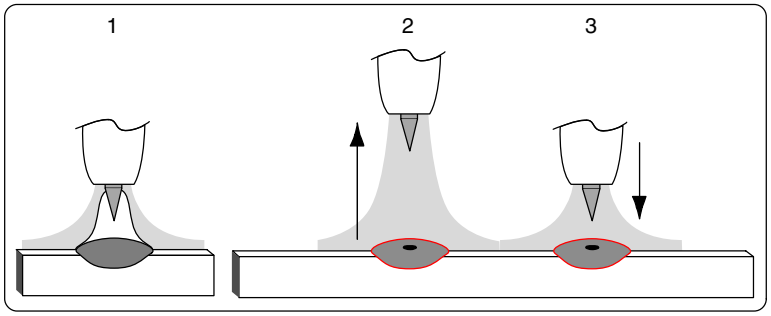

Arc Start With Lift-Arc TIG

Lift-Arc is used for the DCEN GTAW process when HF Start method is not permitted.

Select Lift-Arc at Process/Contactor switch.

Turn gas on.

1 Touch or scratch.

2 Lift at any angle.

Touch tungsten electrode to workpiece at weld start point. Slowly lift electrode. Arc is started when electrode is lifted.

Maintain shielding gas coverage and eliminate tungsten and workpiece contamination by using Auto-Crater or Auto-Stop to end the arc.

Arc End With Auto-Crater:

☞ *Remote control is not needed when using Auto-Crater.*

1 While welding.

2 Lift torch slightly to start Auto-Crater end (current is reduced).

3 Lower torch. Weld current ramps down.

4 Shielding gas continues until shut off.

Arc End With Auto-Stop:

1 While welding.

2 Lift torch to start Auto-Stop. (Lift higher than that needed to start Auto-Crater.) Arc stops.

3 Move torch back down to maintain gas coverage and prevent contamination.

WM Marketing

6-7. Remote Voltage/Amperage Control

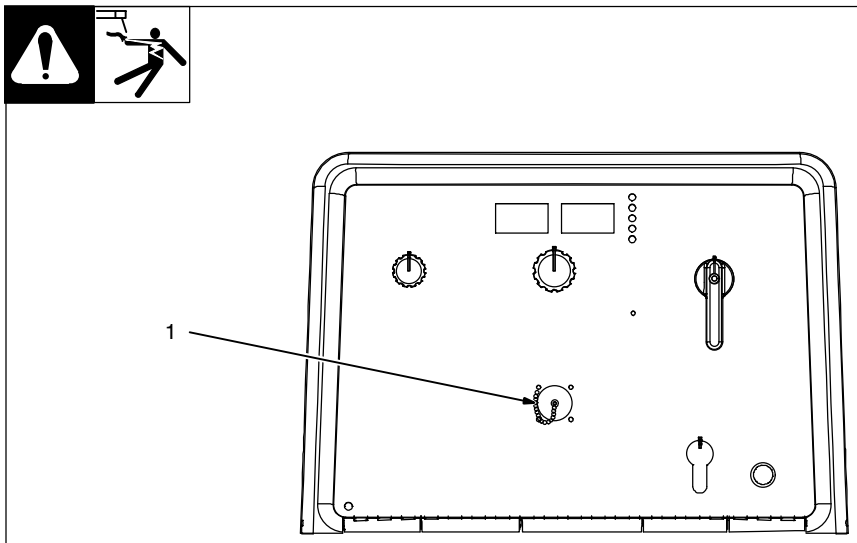

1 Remote Receptacle RC4

Connect optional remote voltage/amperage (V/A) control to RC4 (see Section 5-12).

With remote control connected, weld output in a CC mode (Stick, TIG) is determined by a combination of front panel and remote control voltage/amperage settings. In CV mode (Wire), weld output is controlled through remote control only.

2 Remote Hand Control (Optional)

3 Remote Foot Control (Optional)

☞ *Engine runs at weld/power speed in Wire mode whenever a device connected to the remote receptacle makes closure between pins A and B. In all other modes, the engine runs at idle speed until a load is applied.*

In Example:
Process = Stick (Using Remote On/Off)
Min = 25 A CC/DC
Max = 160 A CC/DC

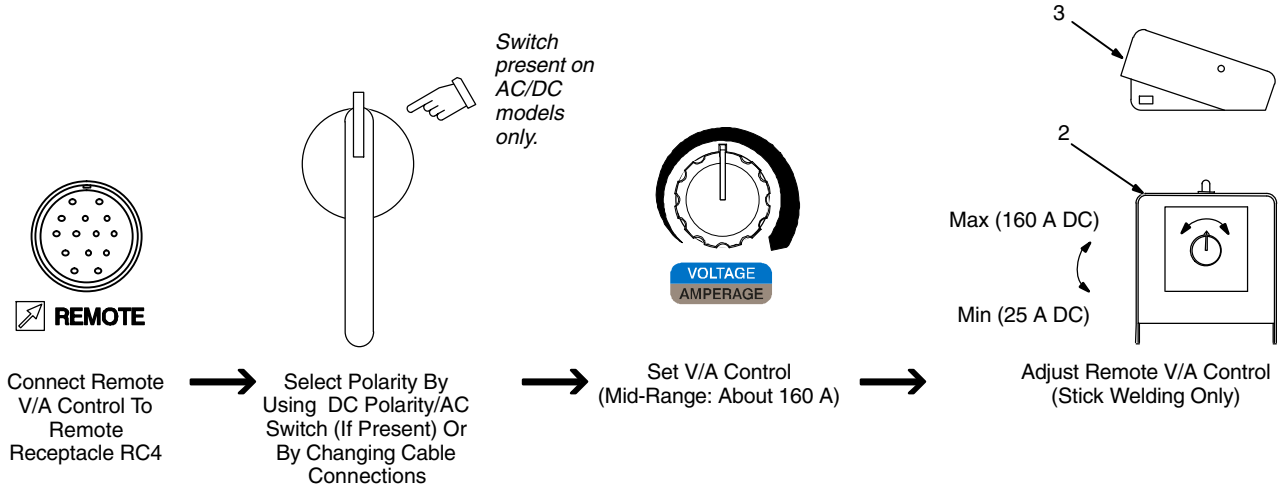

803 571–A / 216 170–A / S-0769 / S-0774

SECTION 7 – OPERATING AUXILIARY EQUIPMENT

7-1. Generator Power Receptacles And Supplementary Protectors

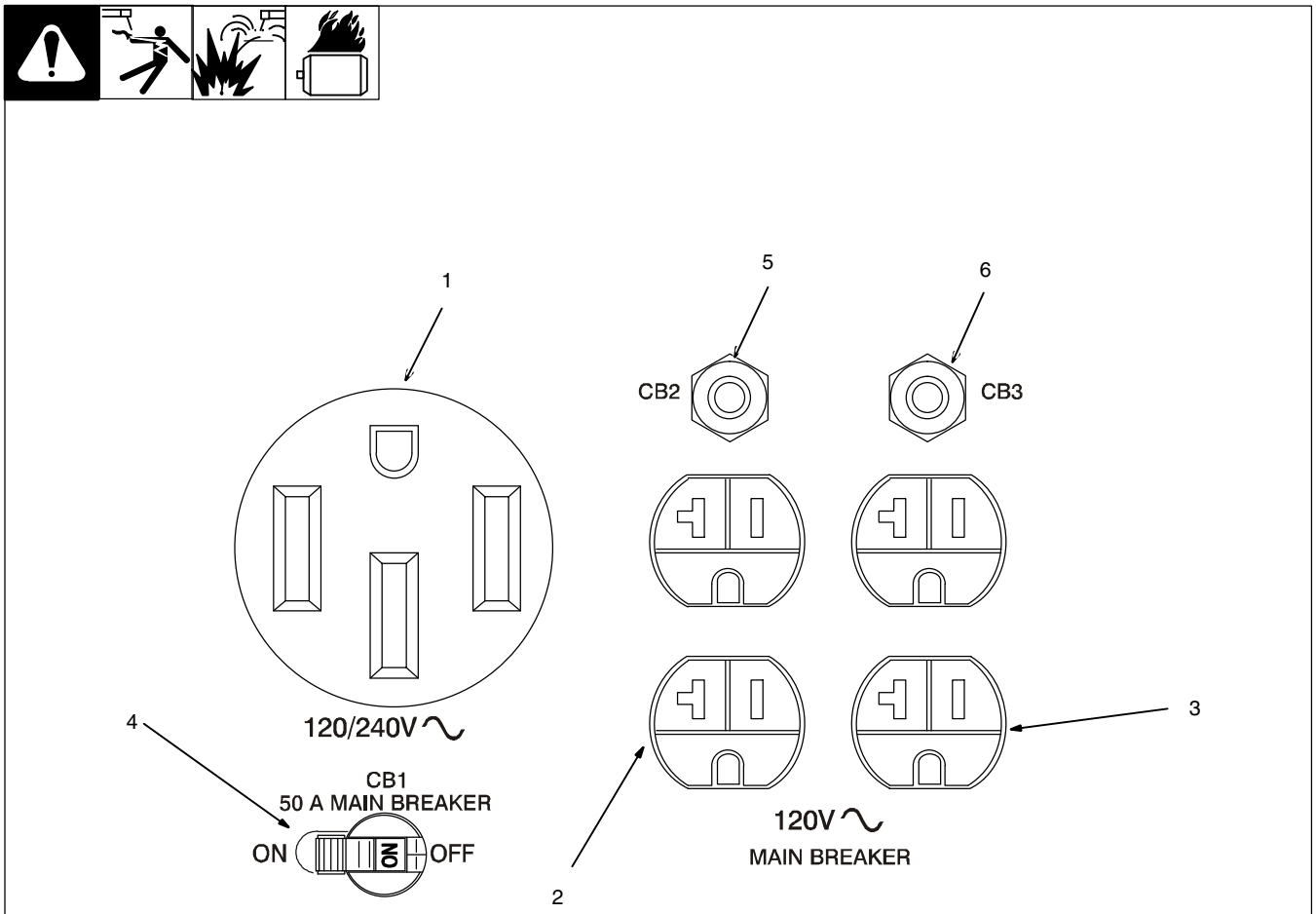

Ref. 287 062

Use GFCI protection when operating auxiliary equipment. If unit does not have GFCI receptacles, use GFCI-protected extension cord. Do not use GFCI receptacle to power life support equipment.

☞ *Generator power decreases as weld current increases.*

1 240 V 50 A AC Receptacle RC1

RC1 supplies 60 Hz single-phase power at weld/power speed. Maximum output is 11 kVA/kW.

2 120 V 20 A AC Duplex Receptacle RC2

3 120 V 20 A AC Duplex Receptacle RC3

RC2 and RC3 supply 60 Hz single-phase power at weld/power speed. Maximum output from RC2 or RC3 is 2.4 kVA/kW (20 A x 120 V).

4 Supplementary Protector CB1

CB1 protects receptacles RC1, RC2, RC3, and 115 volt AC output to Remote Receptacle RC4 from overload. If CB1 opens, the receptacles do not work and 115 volt AC output to Remote Receptacle RC4 stops. Place switch in On position to reset.

5 Supplementary Protector CB2

6 Supplementary Protector CB3

CB2 protects RC2 from overload. CB3 protects RC3 and the 115 volt AC output to Remote Receptacle RC4 from overload. If CB2 opens, RC2 does not work. If CB3 opens, RC3 does not work and the 115 volt AC output to RC4 stops. Press button to reset.

☞ *If supplementary protector continues to open, contact Factory Authorized Service Agent.*

Combined output of all receptacles limited to peak rating of the generator.

Example: If 20 A is drawn from each 120 V duplex receptacle, only 25 A is available at the 240 V receptacle:

2 x (120 V x 20 A) + (240 V x 25 A) = 11 kVA/kW

7-2. Optional GFCI Receptacles

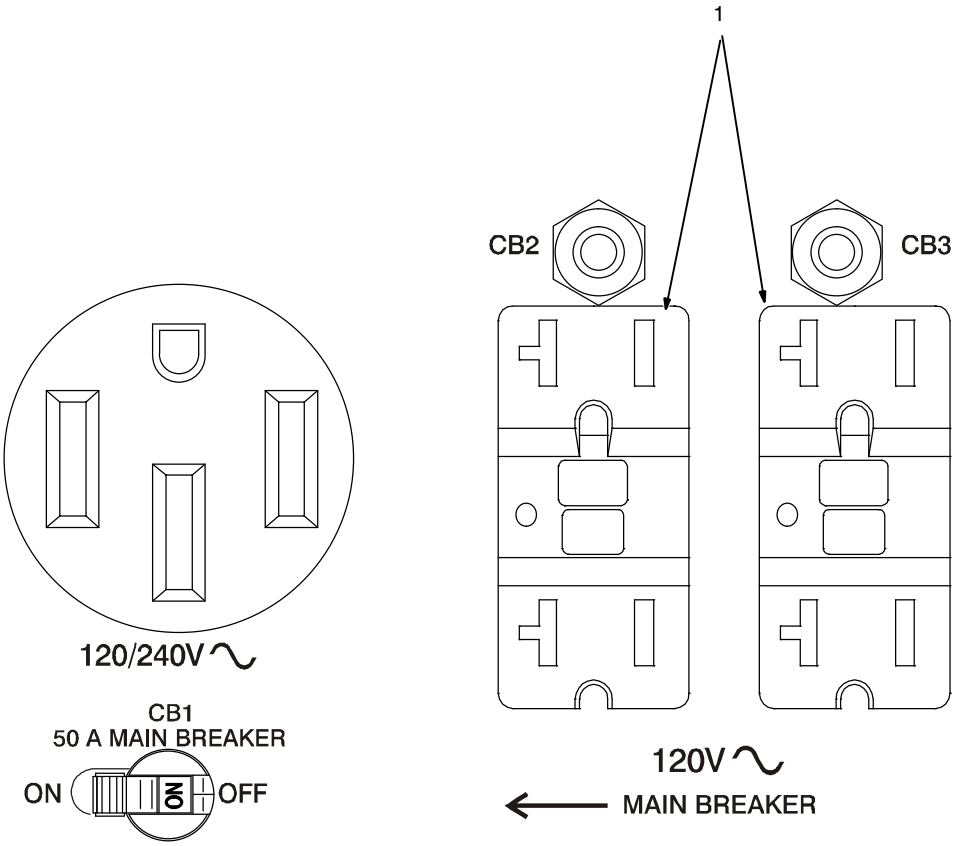

Ref. 287 062

⚠ **Use GFCI protection when operating auxiliary equipment. If unit does not have GFCI receptacles, use GFCI-protected extension cord. Do not use GFCI receptacle to power life support equipment.**

☞ *Generator power decreases as weld current increases.*

Combines output of all receptacles limited to 11 kVA/kW peak rating of the generator.

GFCI Receptacle Option

1 120 V 20 A AC GFCI Receptacles GFCI–2 and GFCI–3.

⚠ **Test GFCI monthly. See Section 7-3 for GFCI information and for resetting and testing procedures.**

GFCI–2 and GFCI–3 supply 60 Hz single–phase power at weld/power speed. Maximum output from GFCI–2 or GFCI–3 is 2.4 kVA/kW.

7-3. GFCI Receptacle Information, Resetting And Testing

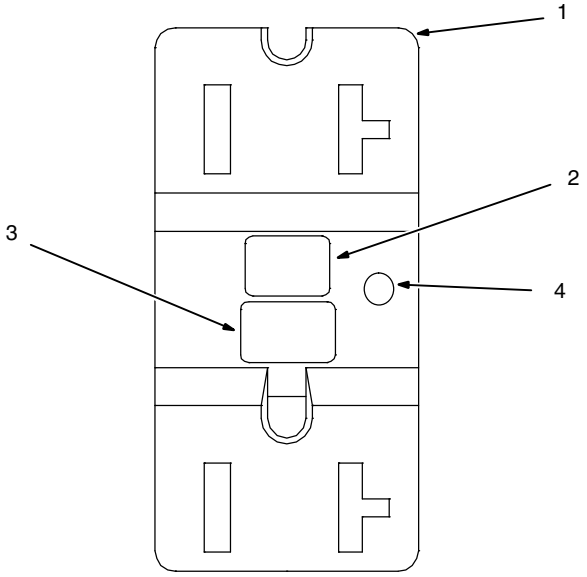

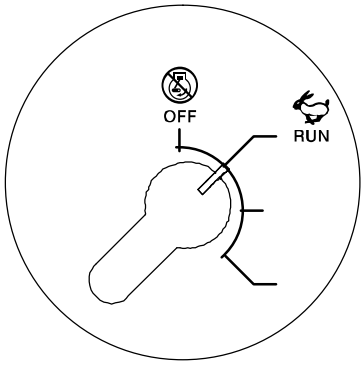

Test and reset GFCI only at Run speed.

RotGFCI1 2012–05

Use GFCI protection when operating auxiliary equipment. If unit does not have GFCI receptacles, use GFCI-protected extension cord. Do not use GFCI receptacle to power life support equipment.

Unplug power cord before attempting to service accessories or tools.

1 120 V 20 A AC GFCI Receptacle

2 GFCI Receptacle Test Button

3 GFCI Receptacle Reset Button

4 GFCI Indicator Light (LED)

GFCI Receptacles

GFCI receptacles protect the user from electric shock if a ground fault occurs in equipment connected to the receptacle. A ground fault occurs when electrical current takes the shortest path to ground (which could be through a person) rather than follow its intended safe path.

If a ground fault is detected, the GFCI Reset button pops out, and the circuit opens to disconnect power to the faulty equipment. A GFCI receptacle does not protect against circuit overloads, short circuits, or shocks not related to ground faults. Reset and test GFCI receptacle according to the following procedures.

Resetting/Testing GFCI Receptacle

Test GFCI monthly. See Testing GFCI Receptacle.

Do not test or reset GFCI receptacles at idle speed/low voltage or the GFCI will be damaged and not provide protection from electric shock caused by a ground fault.

If LED blinks, stop using GFCI receptacle and have it replaced by a Factory Authorized Service Agent.

Resetting GFCI Receptacles

If a GFCI fault occurs, stop engine and disconnect equipment from GFCI receptacle. Check for damaged or wet tools, cords, plugs, etc. connected to the receptacle. Start engine and operate at Run (weld/power) speed. Press GFCI Reset button. Reconnect equipment to GFCI receptacle. If GFCI Reset button pops out again, check the equipment and repair or replace if faulty.

Testing GFCI Receptacles

☞ *GFCI testing must be done with engine running at Run (weld/power) speed.*

Start engine and operate at Run (weld/power) speed.

Press the GFCI Test button. The GFCI Reset button should pop out.

Press the GFCI Reset button.

Have GFCI replaced by a Factory Authorized Service Agent if any of the following occur:
GFCI does not trip when tested
LED blinks
GFCI does not reset.

7-4. Simultaneous Weld And Power

Weld Current in Amperes	Total Power in Watts	120 V Receptacle Amperes	240 V Receptacle Amperes
300	1000	10	5
250	3500	31	15
200	5200	46	23
150	6700	60	30
100	8000	70	35
0	11,000	88	44

7-5. Wiring Instructions For Optional 240 Volt, Single-Phase Plug (NEMA 14-50P)

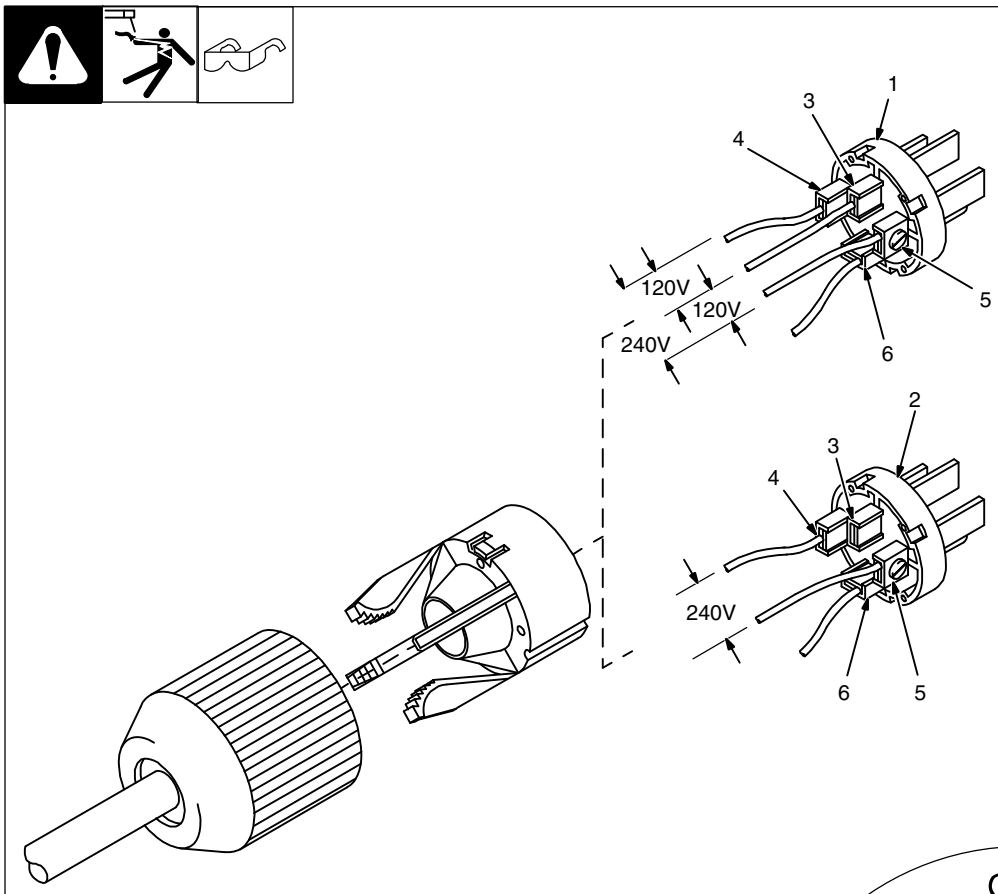

The plug can be wired for a 240 V, 2-wire load or a 120/240V, 3-wire load. See circuit diagram.

1 Plug Wired for 120/240 V, 3-Wire Load

When wired for 120 V loads, each duplex receptacle shares a load with one half of 240 V receptacle.

2 Plug Wired for 240 V, 2-Wire Load

3 Neutral (Silver) Terminal

4 Load 1 (Brass)Terminal

5 Load 2 (Brass) Terminal

6 Ground (Green) Terminal

7 Amperes Available using 120/240 V Plug

Current Available in Amperes	
240 V Receptacle*	Each 120 V Duplex Receptacle
0	20
5	20
10	20
15	20
20	20
25	15
30	10
35	5
40	0
V x A = Watts	
*One 240 V load or two 120 V loads.	

7

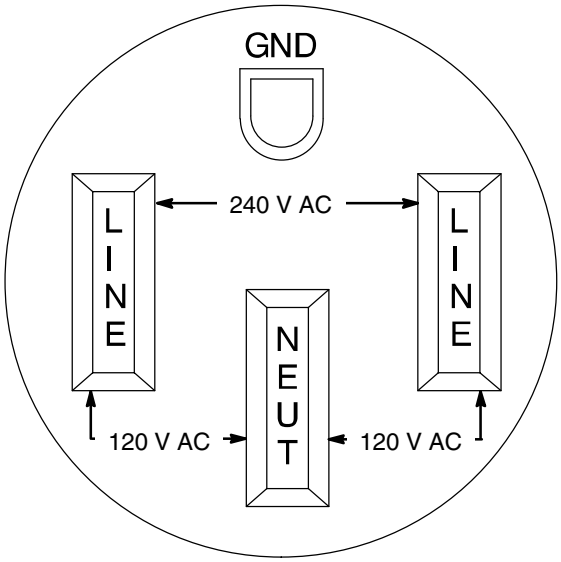

Tools Needed:

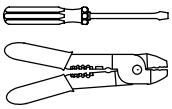

plug1 11/03 – 120 813-D

A complete Parts List is available at www.MillerWelds.com

8-1. Maintenance Label

KOHLER CH23/ECH730, SUBARU EH65 GAS ENGINES

See Engine Manual for complete engine care. Give Engine Specification and Serial Number when ordering parts.

Check Daily.

To Drain Oil: *Push And Turn CCW* → *Pull*

For Our Environment, Recycle Used Oil.

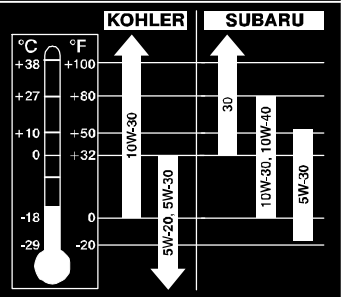

Recommended Oil
API Service Classification . . . SG or higher (If using LP fuel, use synthetic oil.)
Oil Change. . . . . 100 hours
Oil Filter Change . . . . . 200 hours
Oil Filter . . . . . **KOHLER:** MILLER 066 698, Kohler 1205001-S
SUBARU: MILLER 198 754, Subaru 248-65801-00
Oil Capacity w/filter change . Approximately 1.5 quarts

DO NOT OVERFILL . . **KOHLER:** *Keep oil level between **L & F** marks on dipstick.*
SUBARU: *Keep oil level between **2 holes** on dipstick.*

NO SOBRELLENE . . . **KOHLER:** *Mantenga el nivel del aceite entre las marcas **L y F** del medidor.*
SUBARU: *Mantenga el nivel del aceite entre los **dos huecos** del medidor.*

Gasoline

Fuel Grade. . . . . Unleaded, 87 Octane min. (10% Max. Ethanol)
Fuel Filter. . . . . **KOHLER CH23:** MILLER 215 984, Kohler 2505022-S
ECH730: MILLER 246 110, Kohler 2505021-S
MILLER 246 112, Kohler 2505042-S
SUBARU: MILLER 215 984, Subaru 263-65012-A3

12 Volt Battery. . . . . BCI Group 58
Cranking Performance at 0°F (-18°C). . . . 430 Amps min.

Air Filter Service . . . . 100 hours – see Owner's Manual
Air Filter . . . . . **KOHLER CH23:** MILLER 230 016, Kohler 2408303-S
ECH730: MILLER 230 016, Kohler 2408303-S
Air Filter Wrapper . . . **KOHLER CH23:** MILLER 230 017, Kohler 2408305-S
ECH730: MILLER 230 017, Kohler 2408305-S
Air Filter . . . . . **SUBARU:** MILLER 198 755, Subaru 263-32610-A1
(Includes Air Filter Wrapper)

METER MAINTENANCE FUNCTIONS*

- **HOUR METER:** with engine off, place Engine Control switch in RUN position to view engine hours.
- **OIL CHANGE INTERVAL:** with engine off, place Engine Control switch into the RUN/IDLE position to see hours before next oil change. Oil hours start at 100 and count down to 0 (oil change due).
  NOTE: Negative hours indicated when past recommended oil change interval.
  TO RESET: Cycle Engine Control switch from the RUN/IDLE to RUN position 3 times.
- **ENGINE RPM's:** With engine running and the Process Selector switch in any Stick HOT position, cycle Engine Control switch from the RUN/IDLE to RUN position 3 times and meters will display Engine RPM's. Use to check and set both idle and run speed RPM's. Accuracy is ±16 RPM's. Turn machine off to reset display.

*For Miller Legend, see Owner's Manual.

FUNCIONES DE MANTENIMIENTO DE LOS MEDIDORES*

- **HORÓMETRO:** con el motor apagado, ponga el control del motor en la posición RUN (marcha) para ver las horas en el motor.
- **INTERVALO DEL CAMBIO DE ACEITE:** con el motor apagado, ponga el CONTROL DEL MOTOR en la posición RUN/IDLE (marcha/ralentí) para ver las horas que quedan antes del cambio de aceite. Las horas comienzan en 100 y descienden a 0 (momento de cambiar el aceite).
  NOTE: Horas negativas indican que se a sobre pasado el intervalo del cambio del aceite.
  PARA REARMAR: Cicle el control del motor de la posición RUN/IDLE a RUN tres veces.
- **RPMs DEL MOTOR:** Con el motor funcionando y el interruptor de controlar el proceso en cualesquiera posición "Stick HOT", cicle el control del motor de la posición RUN/IDLE a RUN 3 veces y los medidores mostrarán el RPM DEL MOTOR. Úselo para chequear y fijar ambas velocidades de ralentí y marcha. La precisión es ±16 RPMs. Apague la máquina para rearmar la pantalla.

*Para la Legend de Miller, vea el manual del dueño.

Engine Speed No Load — High Speed . . . . 3675-3750 RPM
Idle. . . . . 2200-2300 RPM
Miller Legend . . . See Owner's Manual

Spark Plug . . . . . **KOHLER:** MILLER 067 007, Kohler 1213202-S, Champion RC-12YC
Gap: 0.030 in.
Spark Plug . . . . . **SUBARU:** MILLER 198 777, Subaru X65-01407-30, NGK BPR4EY
Gap: 0.025 in.
Use only resistor spark plugs and wires.

Tune-up and Filter Kit . . .(Includes Air, Oil and Fuel Filters, and 2 Spark Plugs)
KOHLER CH23: MILLER 230 015
ECH730: MILLER 246 115
SUBARU: MILLER 199 062

227864-G

8-2. Routine Maintenance

☞ *Also see Voltmeter/Ammeter displays to assist in scheduling maintenance (see Section 6-1). The Voltmeter and Ammeter display total engine operating hours at start-up.*

☞ *Follow the storage procedure in the engine owner's manual if the unit will not be used for an extended period.*

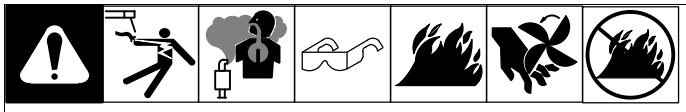

Recycle engine fluids.

Stop engine before maintaining.

☞ *See Engine Manual and Maintenance Label for important start-up, service, and storage information. Service engine more often if used in severe conditions.*

	✓ = Check ◇ = Change ● = Clean ☆ = Replace * To be done by Factory Authorized Service Agent				Reference
Every **8** Hours	✓ Fuel Level	✓ Oil Level	✓ Meters for next oil change interval	● Oil, Fuel Spills	Section 5-5, 5-6, 6-2
Every **25** Hours	✓● Spark Arrestor Screen	● Air Cleaner Wrapper			Section 8-4, 8-5
Every **50** Hours	● Weld Terminals				
Every **100** Hours	● Battery Terminals	● Cooling System	◇ Oil	✓☆ Air Cleaner Element	Engine Manual, Section 8-5, 8-6, 8-7
Every **200** Hours	☆ Unreadable Labels	✓ Spark Plug Gap	◇ Oil Filter	☆ Fuel Filter	Engine Manual, Section 8-6, 8-7
Every **500** Hours	✓☆ Weld Cables	✓ Slip Rings* ✓ Brushes*	✓Valve Clearance*		Engine Manual

NOTICE *– This equipment meets US EPA Evaporative Standards. Be sure fuel system replacement parts meet EPA Evaporative Standards.*

8-3. Electronic Fuel Injection (EFI) System And Servicing Information

NOTICE *– EFI system components can be damaged if these precautions are not followed:*

- Do not disconnect or reconnect the wiring harness connector to the control unit or any individual components with the Engine Control switch On.
- Never attempt to service any fuel system component while engine is running or the Engine Control switch is On.
- Clean any joint or fitting with approved cleaning solvent before opening to prevent dirt from entering the system.
- Cleanliness is essential and must be maintained at all times when servicing or working on the EFI system. Dirt can cause significant problems.
- Always depressurize the fuel system through the test valve in the fuel rail before disconnecting or servicing any fuel system components.
- Do not used compressed air if the system is open.
- Avoid direct water or spray contact with system components.

8-4. Servicing Optional Spark Arrestor

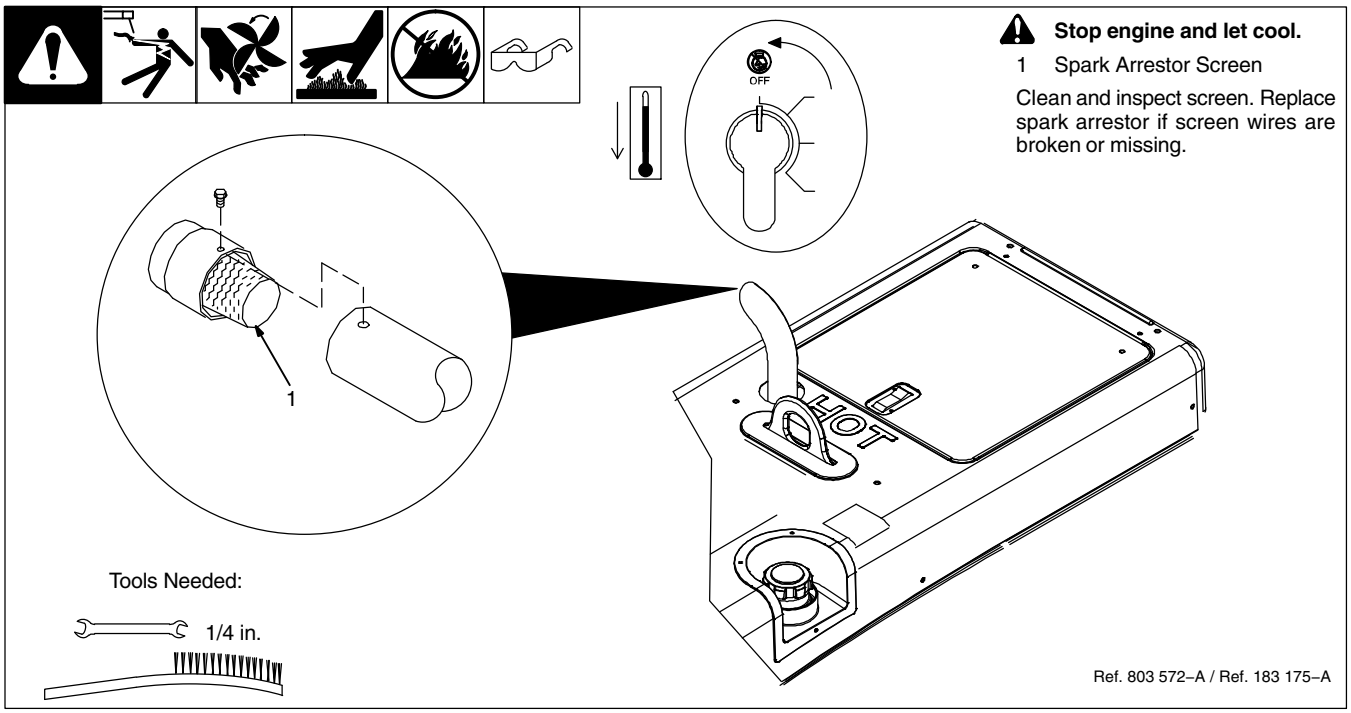

Stop engine and let cool.

1 Spark Arrestor Screen

Clean and inspect screen. Replace spark arrestor if screen wires are broken or missing.

8-5. Servicing Air Cleaner

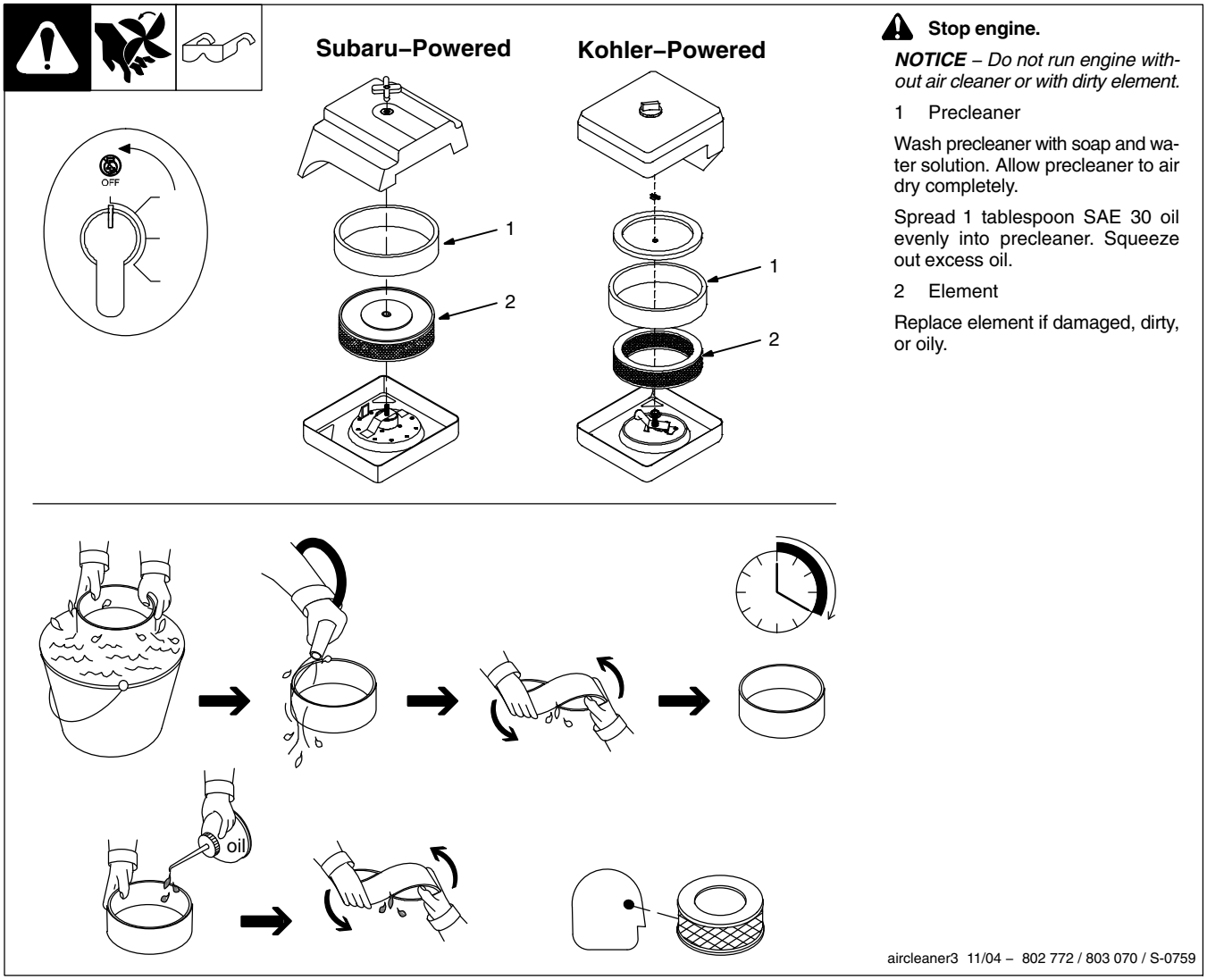

Stop engine.

NOTICE *– Do not run engine without air cleaner or with dirty element.*

1 Precleaner

Wash precleaner with soap and water solution. Allow precleaner to air dry completely.

Spread 1 tablespoon SAE 30 oil evenly into precleaner. Squeeze out excess oil.

2 Element

Replace element if damaged, dirty, or oily.

8-6. Changing Engine Oil, Oil Filter, And Fuel Filter (Kohler-Powered Units)

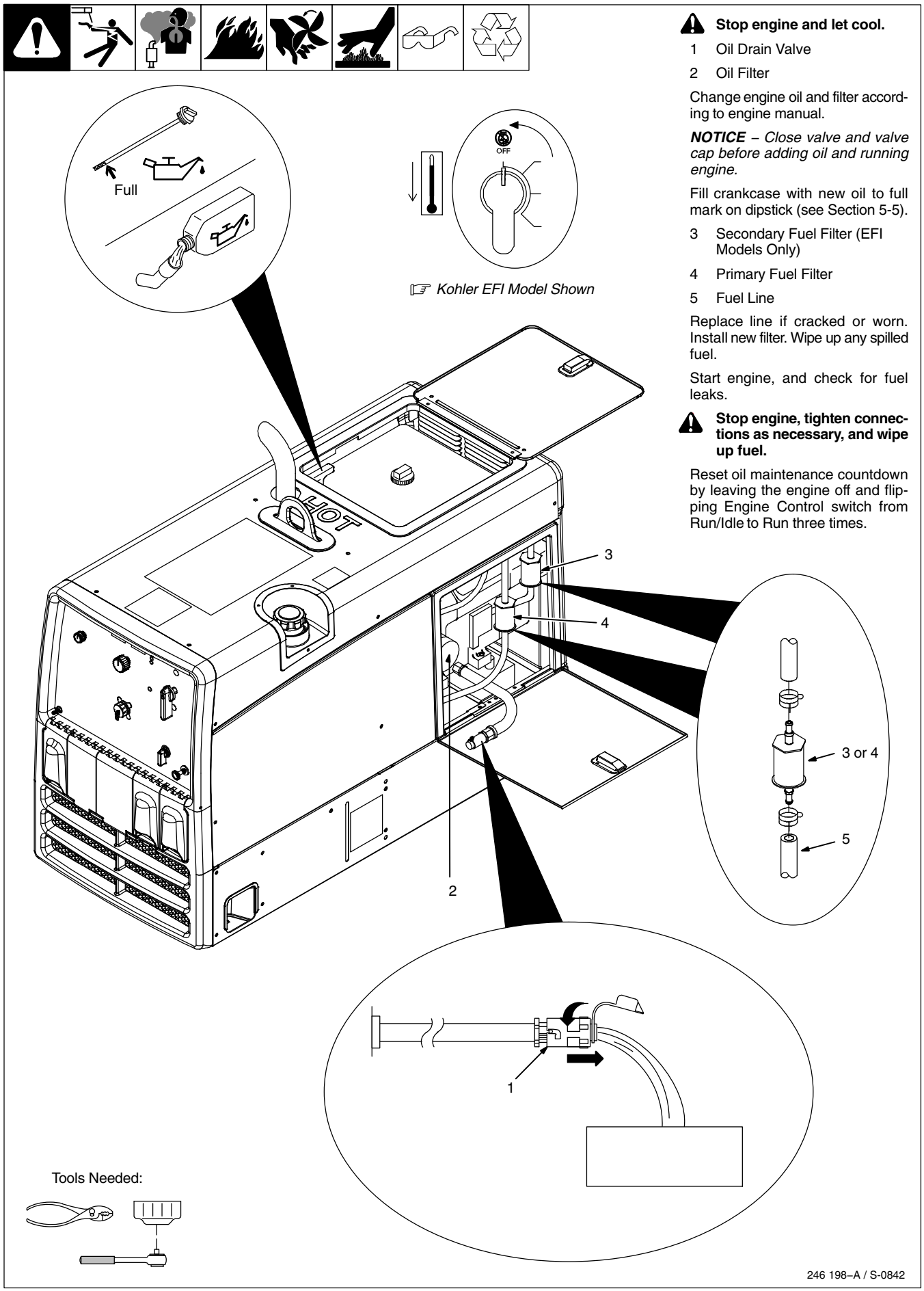

Stop engine and let cool.

1 Oil Drain Valve

2 Oil Filter

Change engine oil and filter according to engine manual.

NOTICE *– Close valve and valve cap before adding oil and running engine.*

Fill crankcase with new oil to full mark on dipstick (see Section 5-5).

3 Secondary Fuel Filter (EFI Models Only)

4 Primary Fuel Filter

5 Fuel Line

Replace line if cracked or worn. Install new filter. Wipe up any spilled fuel.

Start engine, and check for fuel leaks.

Stop engine, tighten connections as necessary, and wipe up fuel.

Reset oil maintenance countdown by leaving the engine off and flipping Engine Control switch from Run/Idle to Run three times.

8-7. Changing Engine Oil, Oil Filter, and Fuel Filter (Subaru-Powered Units)

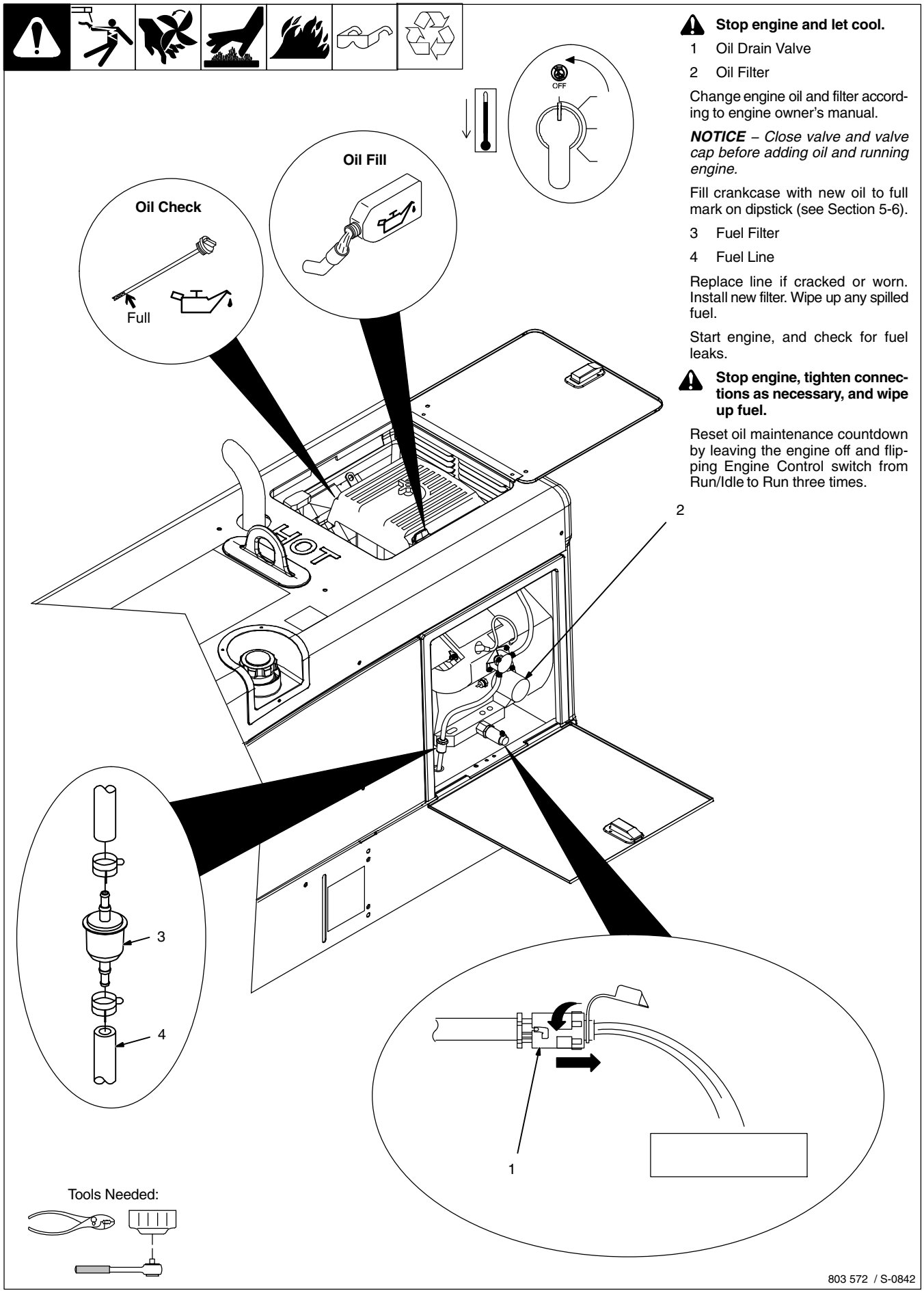

Stop engine and let cool.

1 Oil Drain Valve

2 Oil Filter

Change engine oil and filter according to engine owner's manual.

NOTICE *– Close valve and valve cap before adding oil and running engine.*

Fill crankcase with new oil to full mark on dipstick (see Section 5-6).

3 Fuel Filter

4 Fuel Line

Replace line if cracked or worn. Install new filter. Wipe up any spilled fuel.

Start engine, and check for fuel leaks.

Stop engine, tighten connections as necessary, and wipe up fuel.

Reset oil maintenance countdown by leaving the engine off and flipping Engine Control switch from Run/Idle to Run three times.

8-8. Adjusting Engine Speed (Kohler Carbureted Units [CH-23])

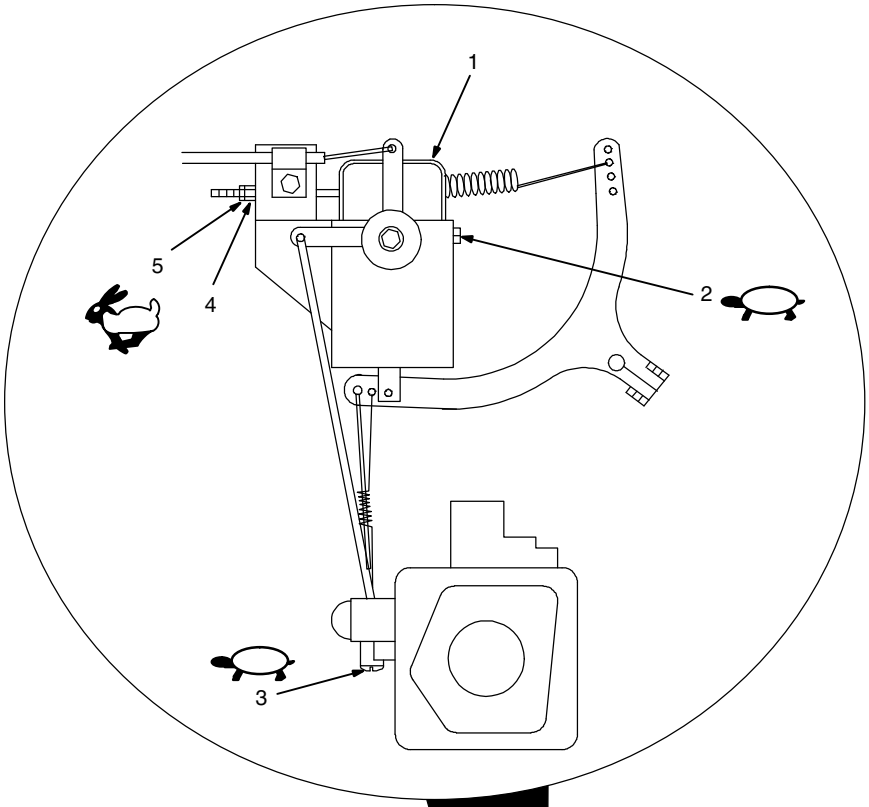

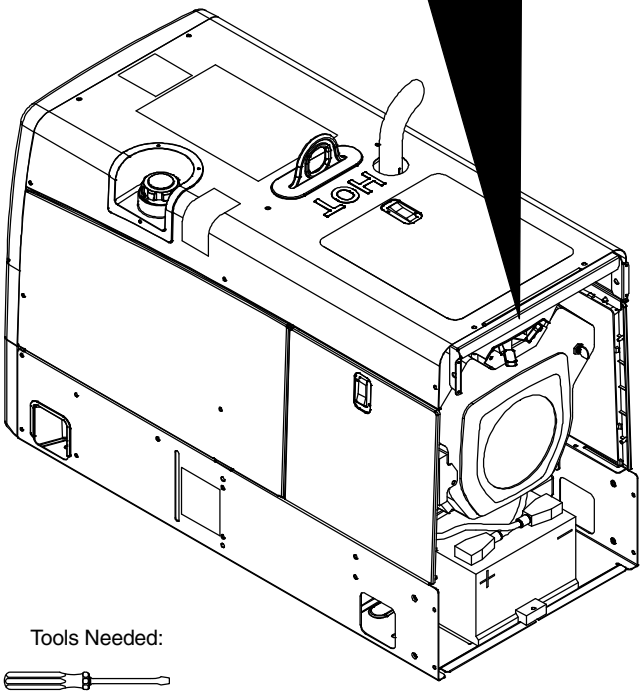

After tuning engine, check engine speeds with a tachometer (see Maintenance Label). If necessary, adjust speeds as follows:

Start engine and run until warm. Turn A/V control to 10.

Remove rear panel and air cleaner to access idle speed adjustments. Remove top cover to access weld/power speed adjustments.

Idle Speed Adjustment

Move Engine Control switch to Run/Idle position.

1 Throttle Solenoid

2 Mounting Screw

3 Idle Speed Screw

Loosen mounting screw. Adjust solenoid position so engine runs at idle speed. If necessary, back out idle speed screw so solenoid can be moved to correct position. Tighten mounting screw. Be sure solenoid linkage works smoothly.

Turn idle speed screw for fine adjustments.

Weld/Power Speed Adjustment

Move Engine Control switch to Run position.

4 Weld/Power Speed Adjustment Nut

5 Lock Nut

Loosen lock nut. Turn adjustment nut until engine runs at weld/power speed. Tighten lock nut.

Stop engine.

Reinstall air cleaner, end panel, and top cover.

Tools Needed:

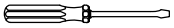

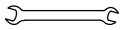

1/4, 3/8 in.

803 573 / 801 209-C

8-9. Adjusting Engine Speed (Kohler EFI Units [ECH-730])

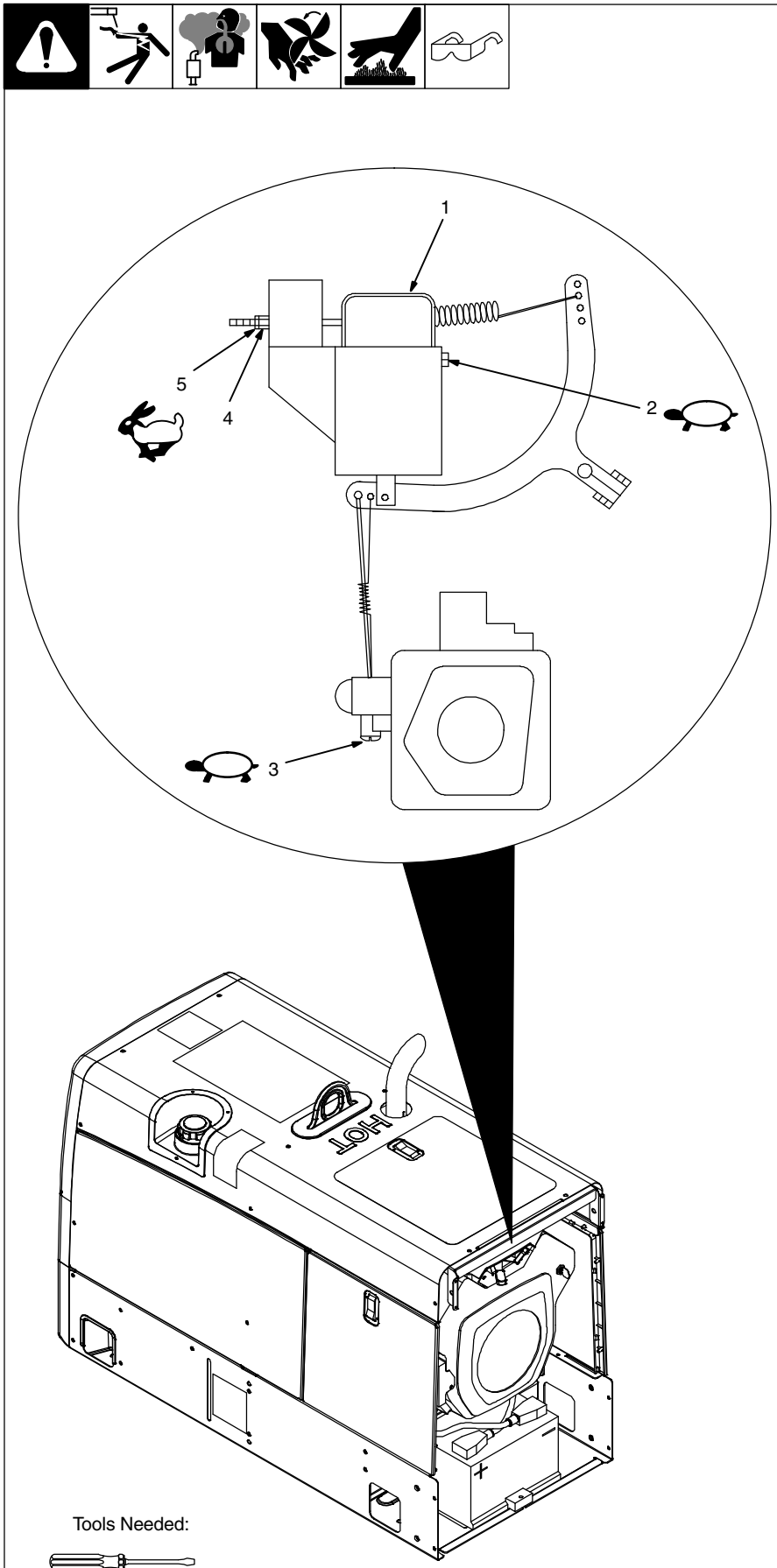

After tuning engine, check engine speeds with a tachometer (see Maintenance Label). If necessary, adjust speeds as follows:

Start engine and run until warm. Turn A/V control to 10.

Remove rear panel and air cleaner to access idle speed adjustments. Remove top cover to access weld/power speed adjustments.

Idle Speed Adjustment

Move Engine Control switch to Run/Idle position.

1 Throttle Solenoid

2 Mounting Screw

3 Idle Speed Screw

Loosen mounting screw. Adjust solenoid position so engine runs at idle speed. If necessary, back out idle speed screw so solenoid can be moved to correct position. Tighten mounting screw. Be sure solenoid linkage works smoothly.

Turn idle speed screw for fine adjustments.

Weld/Power Speed Adjustment

Move Engine Control switch to Run position.

4 Weld/Power Speed Adjustment Nut

5 Lock Nut

Loosen lock nut. Turn adjustment nut until engine runs at weld/power speed. Tighten lock nut.

Close and secure top cover access panel.

Stop engine.

Reinstall air cleaner, end panel, and top cover.

Tools Needed:

1/4, 3/8 in.

246 197-A / 246 198-A

8-10. Adjusting Engine Speed (Subaru-Powered Units)

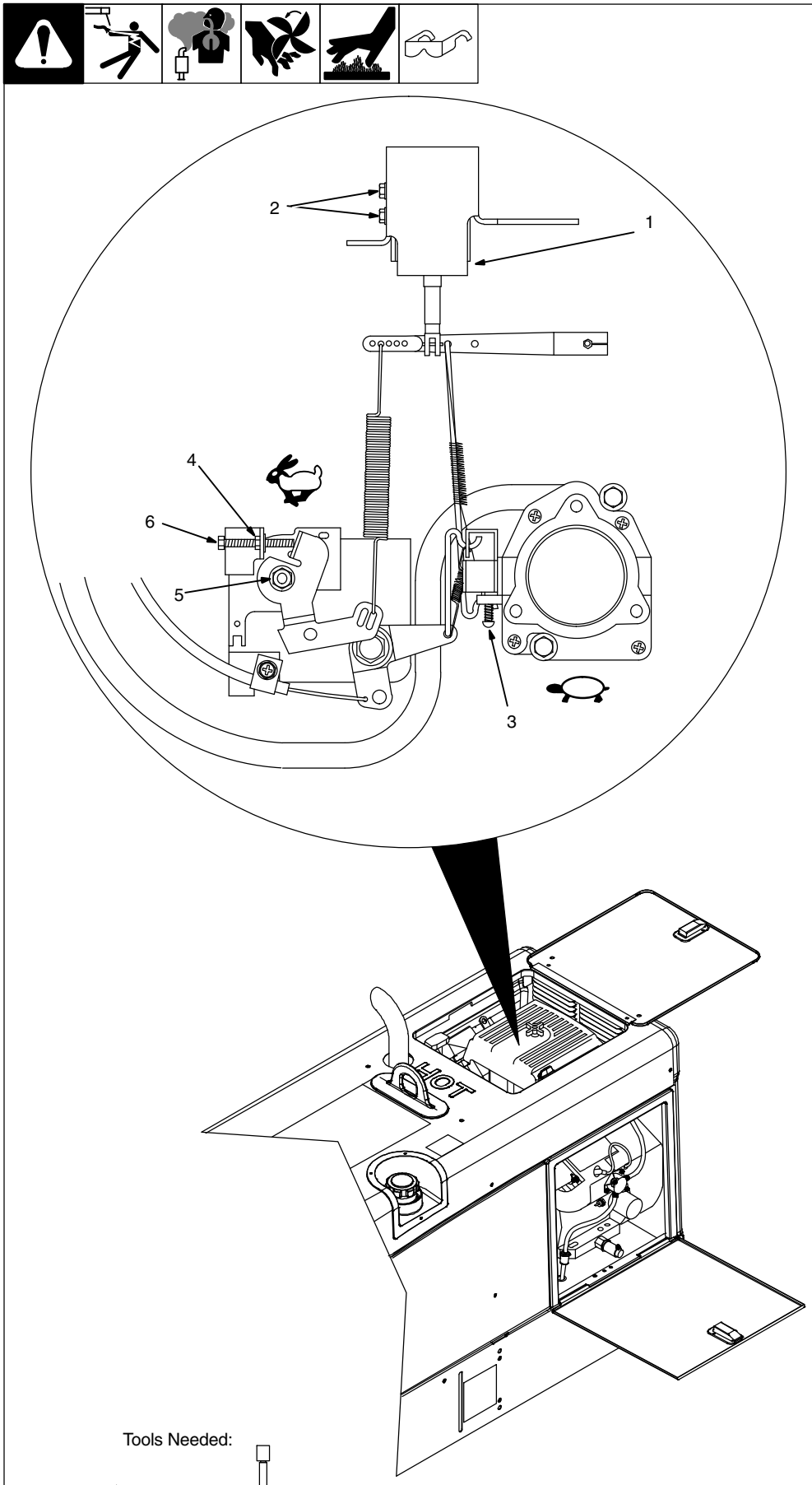

After tuning engine, check engine speeds with a tachometer (see Maintenance Label). If necessary, adjust speeds as follows:

Start engine and run until warm.

Open top cover access panel to access speed adjustments.

Idle Speed Adjustment

Move Engine Control switch to Run/Idle position.

1 Throttle Solenoid

2 Mounting Screws

3 Idle Speed Screw

Loosen mounting screws. Adjust solenoid position so engine runs at idle speed. If necessary, back out idle speed screw so solenoid can be moved to correct position. Tighten mounting screws. Be sure solenoid linkage works smoothly.

Turn idle speed screw for fine adjustments.

Weld/Power Speed Adjustment

Move Engine Control switch to Run position.

4 Jam Nut

5 Lock Nut

6 Weld/Power Speed Adjustment Screw

Loosen jam nut and lock nut. Turn adjustment screw until engine runs at weld/power speed. Tighten jam nut, and then tighten lock nut.

Stop engine.

Close and secure top cover access panel.

803 572–C

8-11. Overload Protection

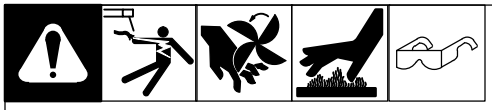

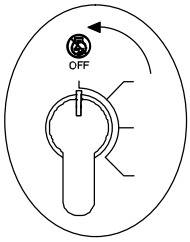

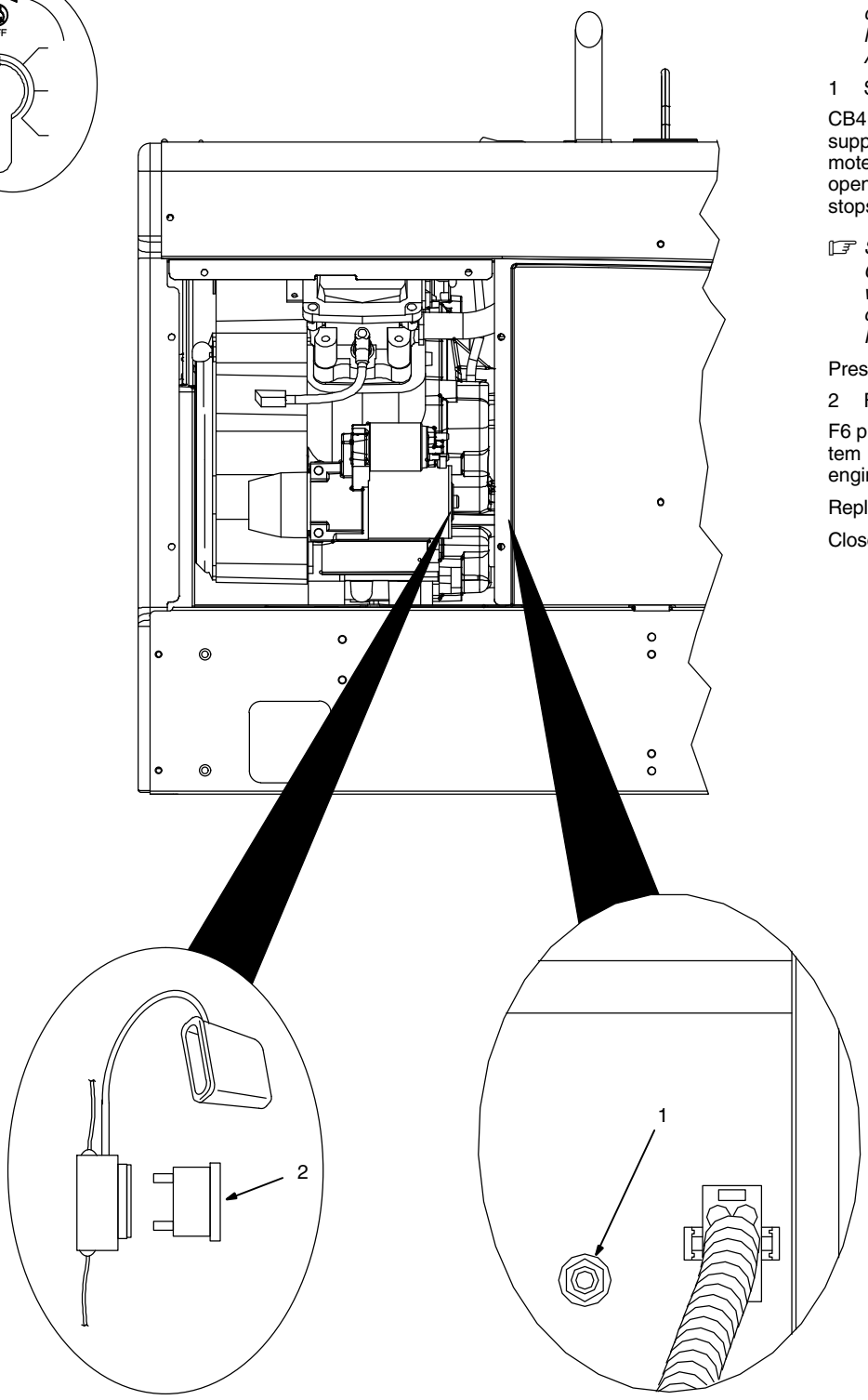

Stop engine.

Open left side door.

☞ *When a supplementary protector or fuse opens, it usually indicates a more serious problem exists. Contact a Factory Authorized Service Agent.*

1 Supplementary Protector CB4

CB4 protects the stator winding supplying 24 volt AC output to Remote receptacle RC4. If CB4 opens, 24 volt AC output to RC4 stops.

☞ *Supplementary protectors CB1 and CB3 protect the stator winding supplying 115 volt AC output to Remote Receptacle RC4 (see Section 7-1).*

Press button to reset.

2 Fuse F6 (See Parts List)

F6 protects the engine wiring system from overload. If F6 opens, engine will not crank.

Replace fuse if open.

Close left side door.

803 773–A / Ref. 216 170 / 161 001

8-12. Welding Troubleshooting

Trouble	Remedy
No weld output.	Check weld control settings.
	Check weld connections.
	Disconnect equipment from generator power receptacles during start-up.
	Increase front panel and/or remote voltage/amperage control settings (see Sections 5-12 and 6-1).
	Check and secure connections to Remote receptacle RC4 (see Sections 5-12).
	Have Factory Authorized Service Agent check brushes, slip rings, and circuit boards PC1 and PC2.
Low weld output.	Check control settings.
	Increase front panel and/or remote voltage/amperage control settings (see Sections 5-12 and 6-1).
	Check and clean air cleaner as necessary (see Section 8-5).
	Check engine speed, and adjust if necessary (see Section 8-8 or 8-10).
	Have Factory Authorized Service Agent check brushes, slip rings, and circuit boards PC1 and PC2.
	See engine manual.
High weld output.	Check control settings.
	Check and adjust engine speed (see Section 8-10 or 8-8).
	Check for obstructed movement of solenoid linkage (see Section 8-8 or 8-10).
	Have Factory Authorized Service Agent check circuit boards PC1 and PC2.
Weld output cannot be adjusted.	Have Factory Authorized Service Agent check field current control board PC2.
Erratic weld output.	Check control settings.
	Clean and tighten connections both inside and outside unit.
	Check and secure lead connections to remote control.
	Be sure connection to work piece is clean and tight.
	Remove excessive coils from weld cables.
	Use dry, properly stored electrodes.
	Check and adjust engine speed (see Section 8-8 or 8-10).
	Have Factory Authorized Service Agent check brushes, slip rings, and circuit boards PC1 and PC2.
	Check shielding gas, ensure proper shielding gas coverage while welding.
No remote voltage/amperage control.	Check and tighten connections to Remote receptacle RC4 (see Section 5-12). Check and secure lead connections to remote control.
No front panel voltage/amperage control.	Disconnect remote control from Remote receptacle RC4 if not needed for weld process (see Section 5-12).
No 24 volt AC power output at Remote receptacle RC4.	Reset supplementary protector CB4 (see Section 8-11).
No 115 volt AC power output at Remote receptacle RC4.	Reset supplementary protector(s) CB1 and/or CB3 (see Section 7-1).
Lack of high frequency; difficulty in establishing Gas Tungsten Arc Welding arc.	Use proper size tungsten for welding amperage.
	Reduce leakage of high frequency from torch or work cable (check grounding, remove excessive coils from weld cables, use shorter weld cables, etc.).
	Check cables and torch for cracked or deteriorated insulation or bad connections. Repair or replace necessary parts.

Trouble	Remedy
Wandering arc – poor control of arc direction.	Reduce gas flow rate.
	Select proper size tungsten. Properly prepare tungsten.
Tungsten electrode oxidizing and not remaining bright after conclusion of weld.	Shield weld zone from drafts.
	Increase postflow time.
	Check and tighten all gas fittings.
	Properly prepare tungsten.

8-13. Generator Power Troubleshooting

Trouble	Remedy
No power output.	Reset supplementary protectors CB1, CB2 and/or CB3 (see Section 7-1).
	Have Factory Authorized Service Agent check brushes, slip rings, and circuit boards PC1 and PC2.
Low power output.	Check and clean air cleaner as necessary.
	Check engine speed, and adjust if necessary (see Section 8-8 or 8-10).
	See engine manual.
High power output.	Check engine speed, and adjust if necessary (see Section 8-8 or 8-10).
Erratic power output.	Have Factory Authorized Service Agent check brushes, slip rings, and field current control board PC2.
	Check receptacle wiring and connections.
	Check governor according to engine manual.

8-14. Engine Troubleshooting

Trouble	Remedy
Engine will not crank.	Check fuse F6, and replace if open (see Section 8-11).
	Check battery voltage.
	Check battery connections and tighten if necessary.
	Check plug PLG5 and plug PLG8 connections.
	Have Factory Authorized Service Agent check Engine Control switch S2.
Engine does not start.	Check fuel level (see Section 5-5 or 5-6).
	Check battery and replace if necessary.
	Check engine charging system according to engine manual.
	Have Factory Authorized Service Agent check fuel shutoff solenoid FS1 according to engine manual (carbureted engines only).
	See engine manual.
Engine starts but stops when Engine Control switch returns to Run/Idle position.	Check oil level (see Section 5-5 or 5-6). Low oil pressure shutdown stops engine if oil pressure is too low.
	Use correct grade oil for operating temperature. (see Section 8-1).
	Have Factory Authorized Service Agent check low oil pressure shutdown switch S5.

Trouble	Remedy
Battery discharges between uses.	Place Engine Control switch in Off position when unit is not running.
	Clean top of battery with baking soda and water solution; rinse with clear water.
	Periodically recharge battery (approximately every 3 months).
	Replace battery.
	Check voltage regulator according to engine manual.
Engine stopped during normal operation.	Check fuel level (see Section 5-5 or 5-6).
	Check oil level (see Section 5-5 or 5-6). Low oil pressure shutdown stops engine if oil pressure is too low. Oil level too high reduces capacity of the fuel pump.
	Have Factory Authorized Service Agent check fuel shutoff solenoid FS1 according to engine manual (carbureted engines only).
	Have Factory Authorized Service Agent check low oil pressure shutdown switch S5.
Engine does not return to idle speed.	Be sure Engine Control switch S2 is in Run/Idle position.
	Remove all weld and generator power loads.
	Place Process/Contactor switch in Electrode Hot position or turn off remote contactor. The unit will not return to idle speed when Process/Contactor switch is in a remote position and the remote contactor is on.
	Turn off remote device connected to Remote receptacle RC4 (see Section 5-12).
	Check for obstructed movement of solenoid linkage (see Section 8-8 or 8-10).
	Have Factory Authorized Service Agent check circuit board PC1 and current transformer CT1.
Engine does not remain at weld/power speed when power or weld load is applied with Engine Control switch in Run/Idle position.	Place Engine Control switch in the Run position for small loads.
	Check for obstructed movement of solenoid linkage (see Section 8-8 or 8-10).
During operation in near freezing temperatures, engine starts and goes to idle but stalls after a few minutes.	Treat fuel with isopropyl alcohol de-icer product.
	Place Engine Control switch in the Run position until unit has been in operation and loaded for a period of time.
During operation in severe cold weather, engine starts and goes to idle but stalls after a few minutes.	Install engine manufacturer's kit for cold-weather operation (carbureted engines only).

SECTION 9 – PARTS LIST

9-1. Recommended Spare Parts

Dia. Mkgs.	Part No.	Description	Quantity
		Recommended Spare Parts	
F6	215621	Fuse, 30 Amp ATO Type	1
	230015	Tune–up & Filter Kit, **Kohler CH23** (Includes)	1
	230016	Air Filter Element	1
	066698	Oil Filter	1
	215985	Filter, Fuel w/Clamps & 1/4 in. Fuel Line	1
	067007	Spark Plug	2
	230017	Air Filter Wrapper	1
	246115	Tune–up & Filter Kit, **Kohler ECH730** (includes)	1
	230016	Air Filter Element	1
	066698	Oil Filter	1
	246117	Filter, Fuel w/Clamps (Primary)	1
	246123	Filter, Fuel w/Clamps (Secondary)	1
	067007	Spark Plug	2
	230017	Air Filter Wrapper	1
	199062	Tune–up & Filter Kit (**Subaru**) (includes)	1
	198755	Element, Air Filter	1
	198754	Oil Filter	1
	215985	Filter/Clamps, Fuel 1/4 in. Line	1
	198777	Spark Plug	2

NOTICE *– This equipment meets US EPA Evaporative Standards. Be sure fuel system replacement parts meet EPA Evaporative Standards.*

☞ *A complete Parts List is available on-line at www.MillerWelds.com.*

Notes

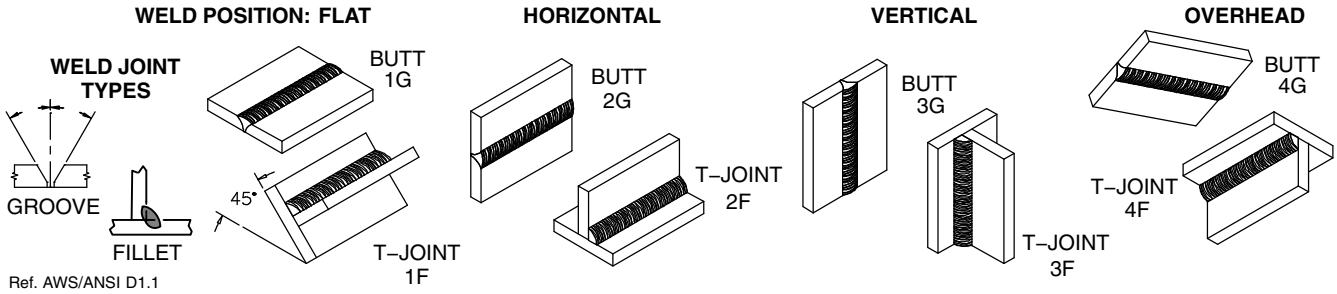

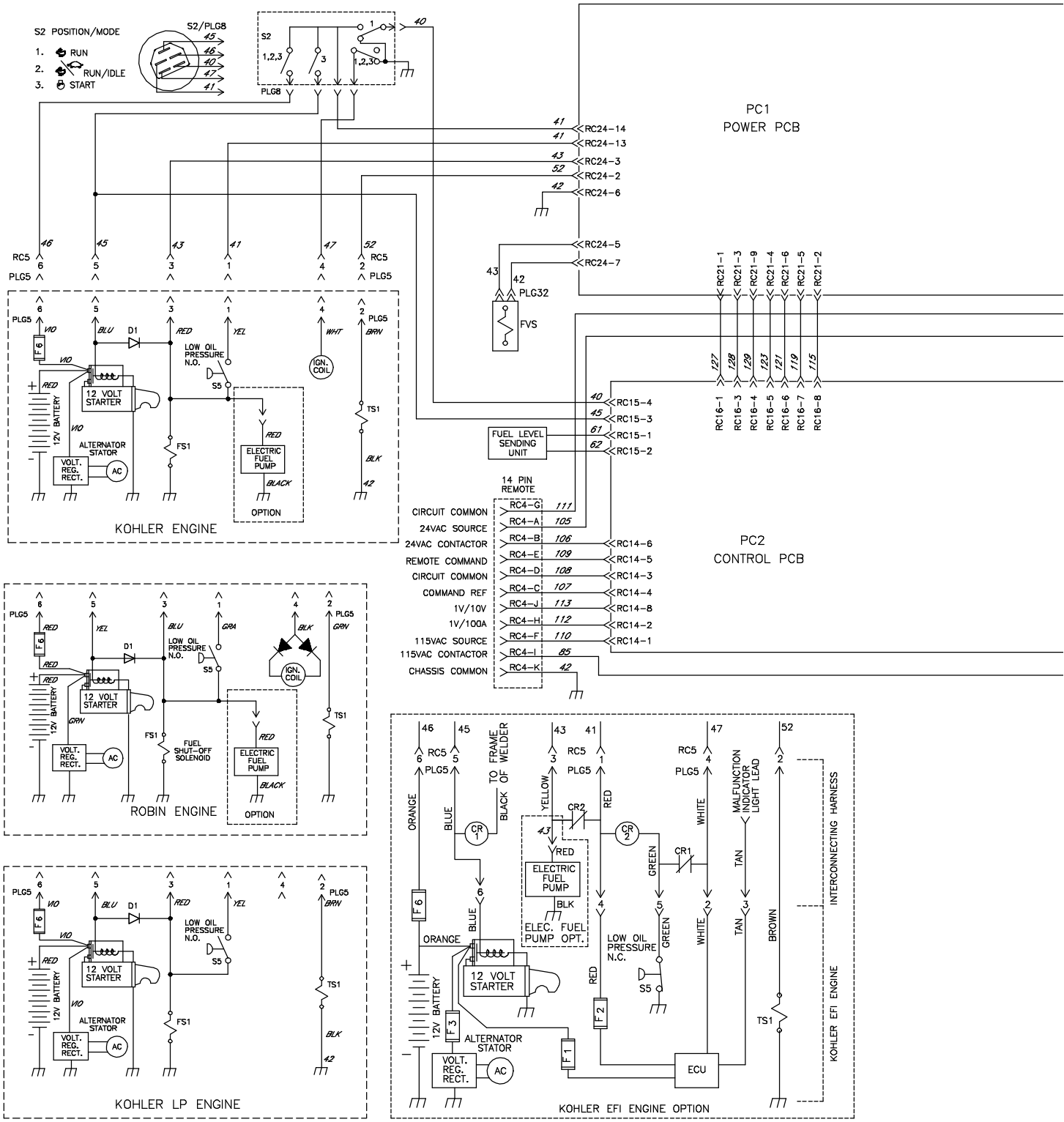

Figure 10-1. Circuit Diagram For Welding Generator Models With AC/DC Output

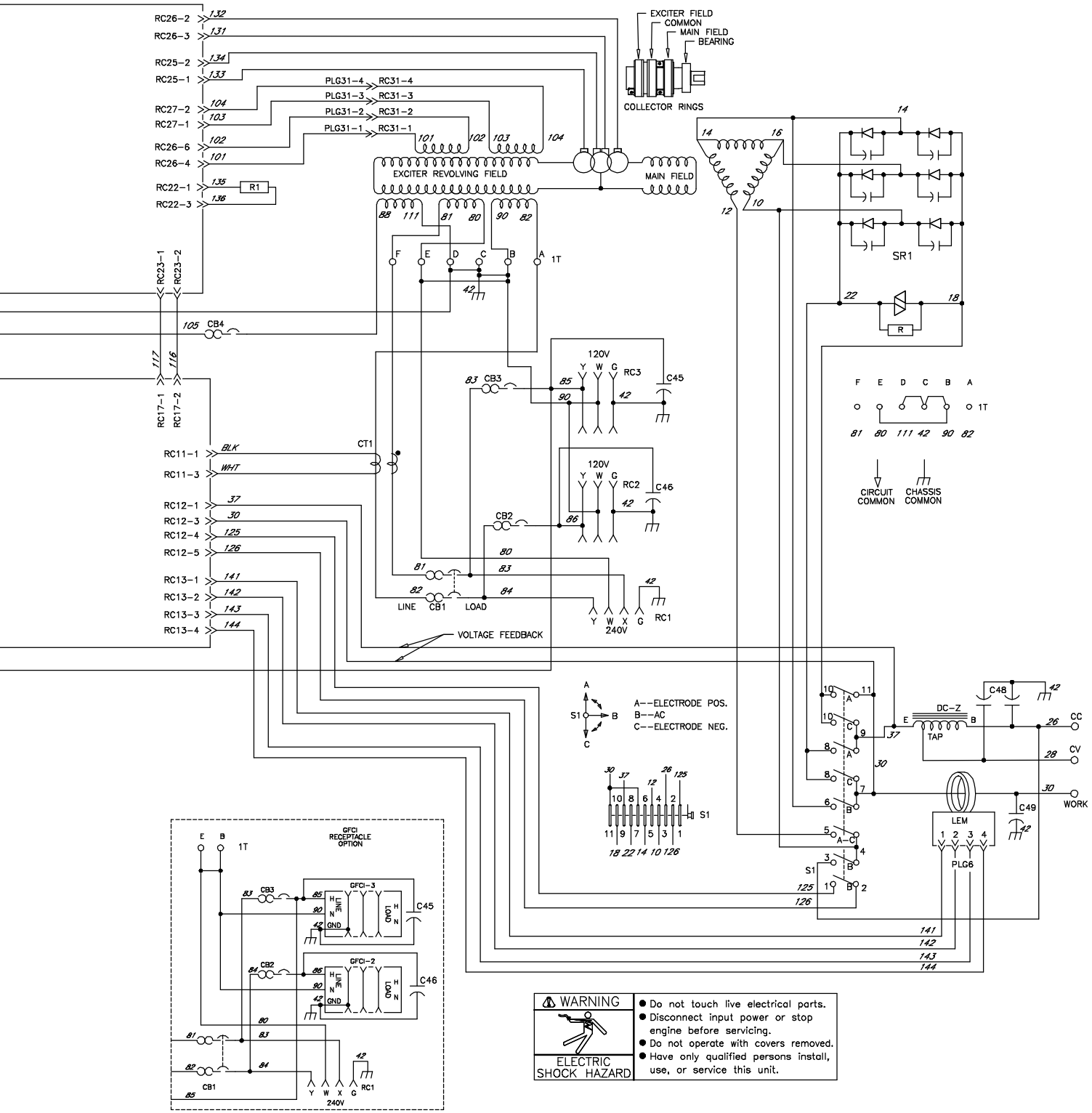
EXCITER FIELD
COMMON
MAIN FIELD
BEARING
COLLECTOR RINGS
EXCITER REVOLVING FIELD
MAIN FIELD
SR1
R
R1
CB4
CB3
CB2
CB1
C45
C46
C48
C49
RC3
RC2
RC1
CT1
120V
240V
LINE
LOAD
VOLTAGE FEEDBACK
CIRCUIT COMMON
CHASSIS COMMON
A--ELECTRODE POS.
B--AC
C--ELECTRODE NEG.
DC-Z
TAP
LEM
PLG6
CC
CV
WORK
GFCI RECEPTACLE OPTION
GFCI-3
GFCI-2
WARNING
ELECTRIC SHOCK HAZARD
● Do not touch live electrical parts.
● Disconnect input power or stop engine before servicing.
● Do not operate with covers removed.
● Have only qualified persons install, use, or service this unit.

251 540-A

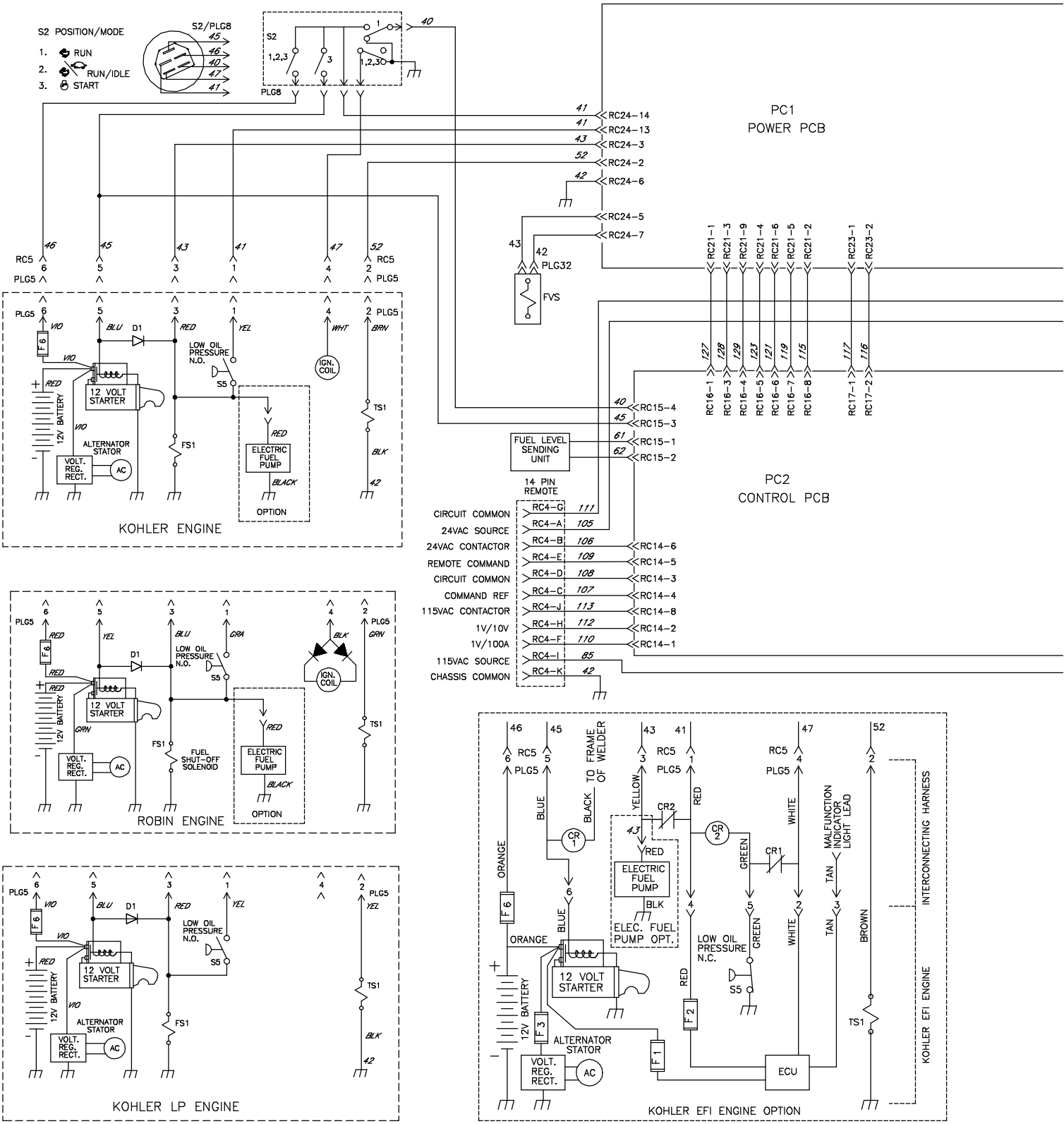

Figure 10-2. Circuit Diagram For Welding Generator Models With DC Output Only

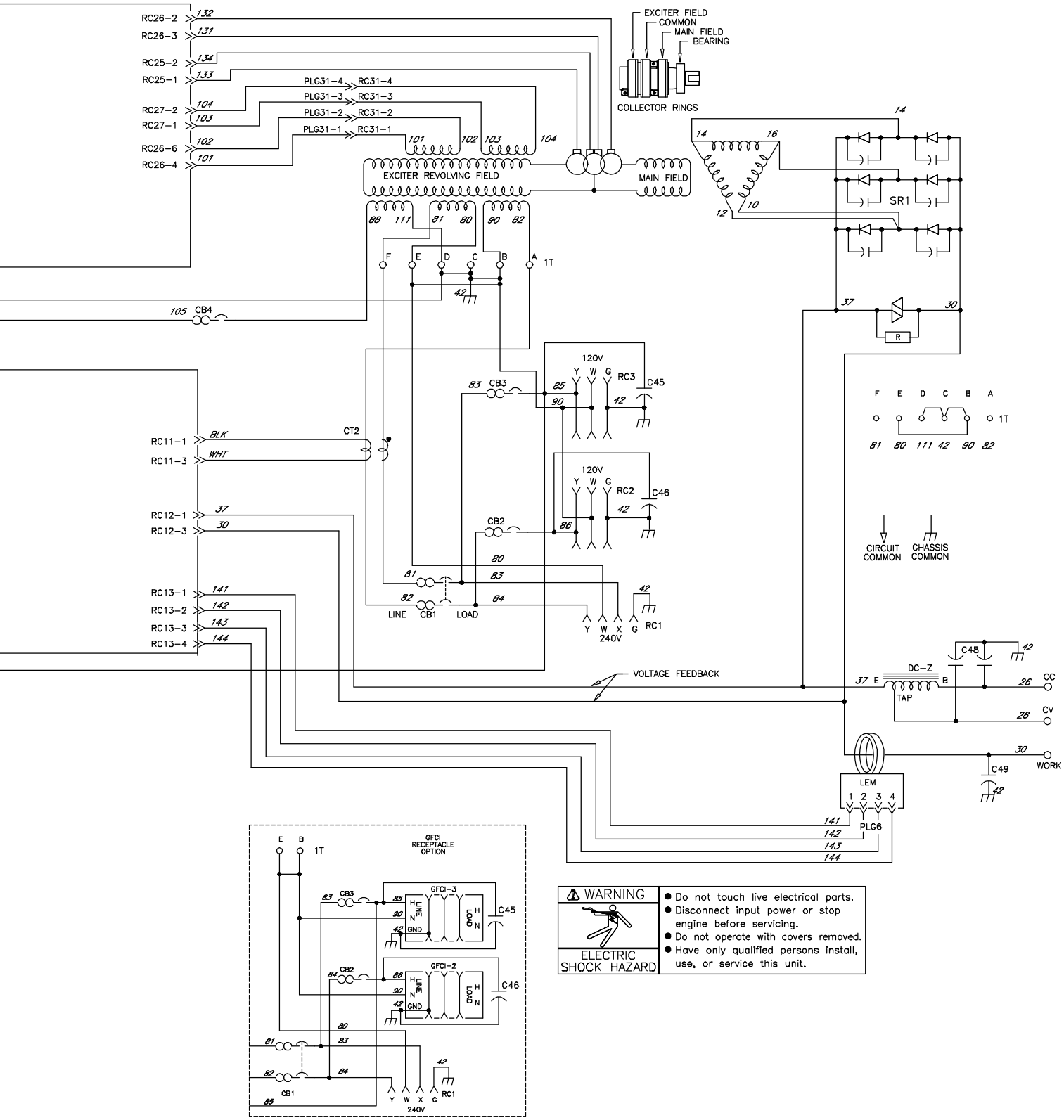
EXCITER FIELD
COMMON
MAIN FIELD
BEARING
COLLECTOR RINGS
RC26-2
RC26-3
RC25-2
RC25-1
RC27-2
RC27-1
RC26-6
RC26-4
PLG31-4
RC31-4
PLG31-3
RC31-3
PLG31-2
RC31-2
PLG31-1
RC31-1
EXCITER REVOLVING FIELD
MAIN FIELD
SR1
R
CB4
CB3
CB2
CB1
CT2
RC3
RC2
RC1
C45
C46
C48
C49
120V
240V
LINE
LOAD
RC11-1
RC11-3
BLK
WHT
RC12-1
RC12-3
RC13-1
RC13-2
RC13-3
RC13-4
VOLTAGE FEEDBACK
DC-Z
TAP
CC
CV
WORK
LEM
PLG6
CIRCUIT COMMON
CHASSIS COMMON
GFCI RECEPTACLE OPTION
GFCI-3
GFCI-2
GND
WARNING
ELECTRIC SHOCK HAZARD
Do not touch live electrical parts.
Disconnect input power or stop engine before servicing.
Do not operate with covers removed.
Have only qualified persons install, use, or service this unit.

251 539-A

SECTION 11 – GENERATOR POWER GUIDELINES

☞ *The views in this section are intended to be representative of all engine-driven welding generators. Your unit may differ from those shown.*

11-1. Selecting Equipment

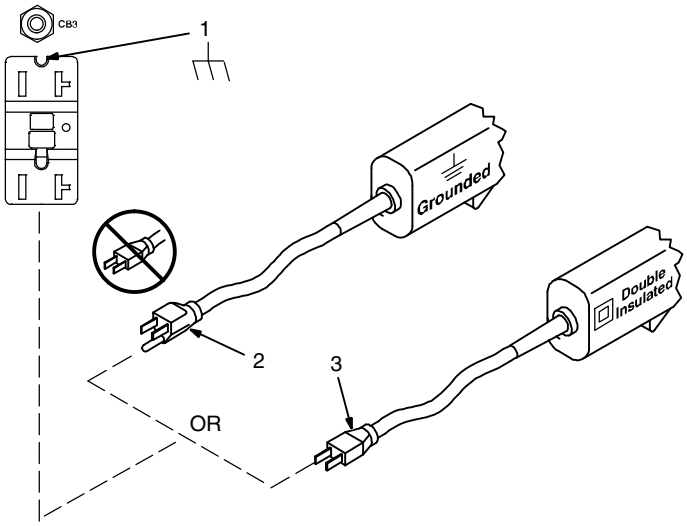

1 Generator Power Receptacles – Neutral Bonded To Frame

2 3-Prong Plug From Case Grounded Equipment

3 2-Prong Plug From Double Insulated Equipment

☞ *Be sure equipment has double insulated symbol and/or wording on it.*

Do not use 2-prong plug unless equipment is double insulated.

gen_pwr 2012–03 – ST-800 577

11-2. Grounding Generator To Truck Or Trailer Frame

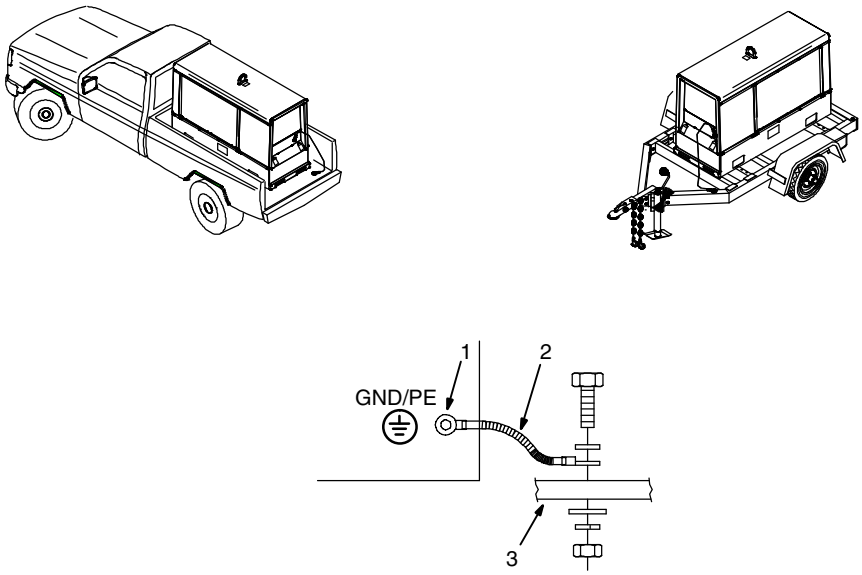

800 652-D

Always ground generator frame to vehicle frame to prevent electric shock and static electricity hazards.

Also see AWS Safety & Health Fact Sheet No. 29, Grounding of Portable And Vehicle Mounted Welding Generators.

1 Equipment Grounding Terminal (On Front Panel)

2 Grounding Cable (Not Supplied)

3 Metal Vehicle Frame

Connect cable from equipment ground terminal to metal vehicle frame. Use #8 AWG or larger insulated copper wire.

☞ *Electrically bond generator frame to vehicle frame by metal-to-metal contact.*

Bed liners, shipping skids, and some running gear insulate the welding generator from the vehicle frame. Always connect a ground wire from the generator equipment grounding terminal to bare metal on the vehicle frame as shown.

Use GFCI protection when operating auxiliary equipment. If unit does not have GFCI receptacles, use GFCI-protected extension cord. Do not use GFCI receptacles to power life support equipment.

11-3. Grounding When Supplying Building Systems

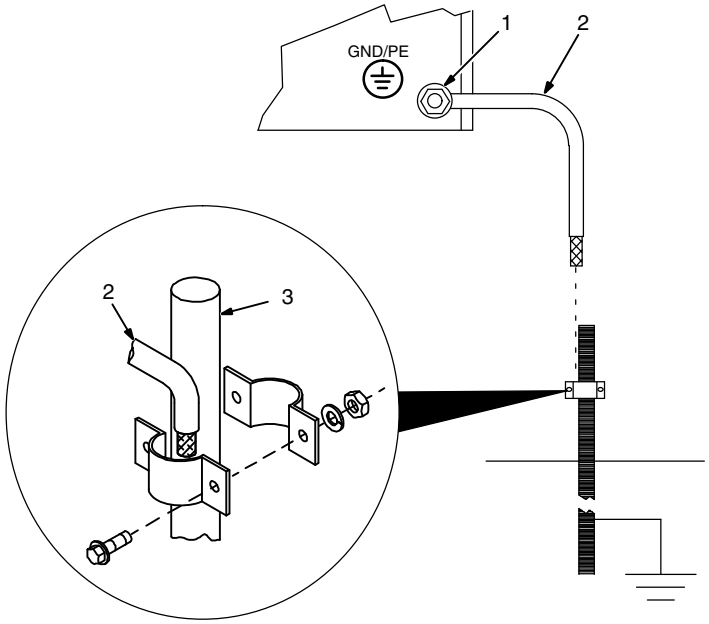

1 Equipment Grounding Terminal

2 Grounding Cable

Use #8 AWG or larger insulated copper wire.

3 Ground Device

☞ *Use ground device as stated in electrical codes.*

Ground generator to system earth ground if supplying power to a premises (home, shop, farm) wiring system.

Also see AWS Safety & Health Fact Sheet No. 29, Grounding of Portable And Vehicle Mounted Welding Generators.

ST-800 576-B

11-4. How Much Power Does Equipment Require?

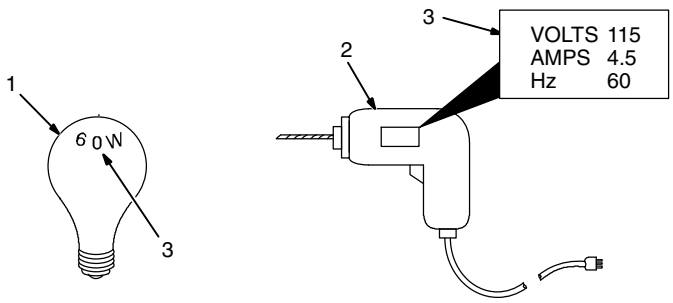

1 Resistive Load

A light bulb is a resistive load and requires a constant amount of power.

2 Non-Resistive Load

Equipment with a motor is a non-resistive load and requires approximately six times more power while starting the motor than when running (see Section 11-8).

3 Rating Data

Rating shows volts and amperes, or watts required to run equipment.

Amperes x Volts = Watts

Example 1: If a drill uses 4.5 amperes at 115 volts, calculate its running power requirement in watts.

4.5 A x 115 V = 520 W

The load applied by the drill is 520 watts.

Example 2: If three 200 watt flood lamps are used with the drill from Example 1, add the individual loads to calculate total load.

(3 x 200W) + 520 W = 1120 W

The total load applied by the three flood lamps and drill is 1120 watts.

S-0623

11-5. Approximate Power Requirements For Industrial Motors

Industrial Motors	Rating	Starting Watts	Running Watts
Split Phase	1/8 HP	800	300
	1/6 HP	1225	500
	1/4 HP	1600	600
	1/3 HP	2100	700
	1/2 HP	3175	875
Capacitor Start-Induction Run	1/3 HP	2020	720
	1/2 HP	3075	975
	3/4 HP	4500	1400
	1 HP	6100	1600
	1-1/2 HP	8200	2200
	2 HP	10550	2850
	3 HP	15900	3900
	5 HP	23300	6800
Capacitor Start-Capacitor Run	1-1/2 HP	8100	2000
	5 HP	23300	6000
	7-1/2 HP	35000	8000
	10 HP	46700	10700
Fan Duty	1/8 HP	1000	400
	1/6 HP	1400	550
	1/4 HP	1850	650
	1/3 HP	2400	800
	1/2 HP	3500	1100

11-6. Approximate Power Requirements For Farm/Home Equipment

Farm/Home Equipment	Rating	Starting Watts	Running Watts
Stock Tank De-Icer		1000	1000
Grain Cleaner	1/4 HP	1650	650
Portable Conveyor	1/2 HP	3400	1000
Grain Elevator	3/4 HP	4400	1400
Milk Cooler		2900	1100
Milker (Vacuum Pump)	2 HP	10500	2800
FARM DUTY MOTORS	1/3 HP	1720	720
Std. (e.g. Conveyors,	1/2 HP	2575	975
Feed Augers, Air	3/4 HP	4500	1400
Compressors)	1 HP	6100	1600
	1-1/2 HP	8200	2200
	2 HP	10550	2850
	3 HP	15900	3900
	5 HP	23300	6800
High Torque (e.g. Barn	1-1/2 HP	8100	2000
Cleaners, Silo Unloaders,	5 HP	23300	6000
Silo Hoists, Bunk Feeders)	7-1/2 HP	35000	8000
	10 HP	46700	10700
3-1/2 cu. ft. Mixer	1/2 HP	3300	1000
High Pressure 1.8 Gal/Min	500 PSI	3150	950
Washer 2 gal/min	550 PSI	4500	1400
2 gal/min	700 PSI	6100	1600
Refrigerator or Freezer		3100	800
Shallow Well Pump	1/3 HP	2150	750
	1/2 HP	3100	1000
Sump Pump	1/3 HP	2100	800
	1/2 HP	3200	1050

11-7. Approximate Power Requirements For Contractor Equipment

Contractor	Rating	Starting Watts	Running Watts
Hand Drill	1/4 in.	350	350
	3/8 in.	400	400
	1/2 in.	600	600
Circular Saw	6-1/2 in.	500	500
	7-1/4 in.	900	900
	8-1/4 in.	1400	1400
Table Saw	9 in.	4500	1500
	10 in.	6300	1800
Band Saw	14 in.	2500	1100
Bench Grinder	6 in.	1720	720
	8 in.	3900	1400
	10 in.	5200	1600
Air Compressor	1/2 HP	3000	1000
	1 HP	6000	1500
	1-1/2 HP	8200	2200
	2 HP	10500	2800
Electric Chain Saw	1-1/2 HP, 12 in.	1100	1100
	2 HP, 14 in.	1100	1100
Electric Trimmer	Standard 9 in.	350	350
	Heavy Duty 12 in.	500	500
Electric Cultivator	1/3 HP	2100	700
Elec. Hedge Trimmer	18 in.	400	400
Flood Lights	HID	125	100
	Metal Halide	313	250
	Mercury	1000	
	Sodium	1400	
	Vapor	1250	1000
Submersible Pump	400 gph	600	200
Centrifugal Pump	900 gph	900	500
Floor Polisher	3/4 HP, 16 in.	4500	1400
	1 HP, 20 in.	6100	1600
High Pressure Washer	1/2 HP	3150	950
	3/4 HP	4500	1400
	1 HP	6100	1600
55 gal Drum Mixer	1/4 HP	1900	700
Wet & Dry Vac	1.7 HP	900	900
	2-1/2 HP	1300	1300

11-8. Power Required To Start Motor

Single-Phase Induction Motor Starting Requirements								
Motor Start Code	G	H	J	K	L	M	N	P
KVA/HP	6.3	7.1	8.0	9.0	10.0	11.2	12.5	14.0

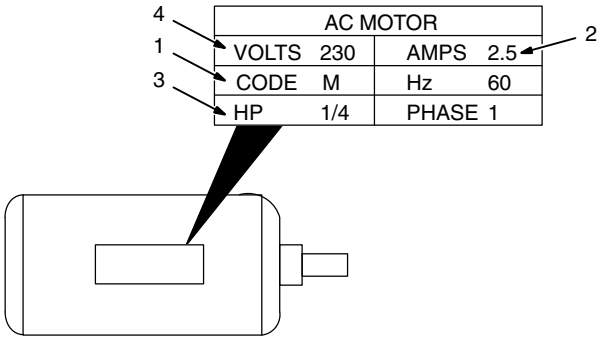

1 Motor Start Code

2 Running Amperage

3 Motor HP

4 Motor Voltage

To find starting amperage:

Step 1: Find code and use table to find kVA/HP. If code is not listed, multiply running amperage by six to find starting amperage.

Step 2: Find Motor HP and Volts.

Step 3: Determine starting amperage (see example).

Welding generator amperage output must be at least twice the motor's running amperage.

(kVA/HP x HP x 1000) / Volts = Starting Amperage

Example: Calculate starting amperage required for a 230 V, 1/4 HP motor with a motor start code of M.

Volts = 230, HP = 1/4, kVA/HP = 11.2

(11.2 x 1/4 x 1000) / 230 = 12.2A

Starting the motor requires 12.2 amperes.

S-0624

11-9. How Much Power Can Generator Supply?

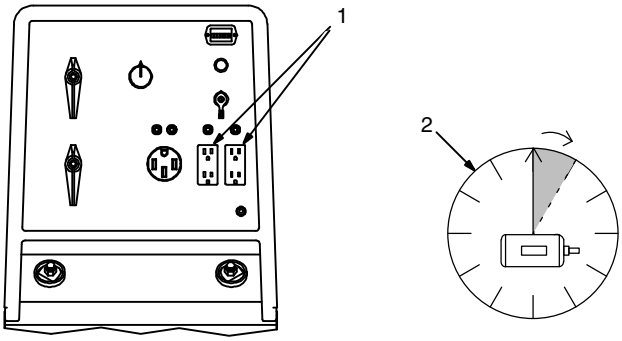

1 Limit Load To 90% Of Generator Output

Always start non-resistive (motor) loads in order from largest to smallest, and add resistive loads last.

2 5 Second Rule

If motor does not start within 5 seconds, turn off power to prevent motor damage. Motor requires more power than generator can supply.

Ref. ST-800 396-A / S-0625

11-10. Typical Connections To Supply Standby Power

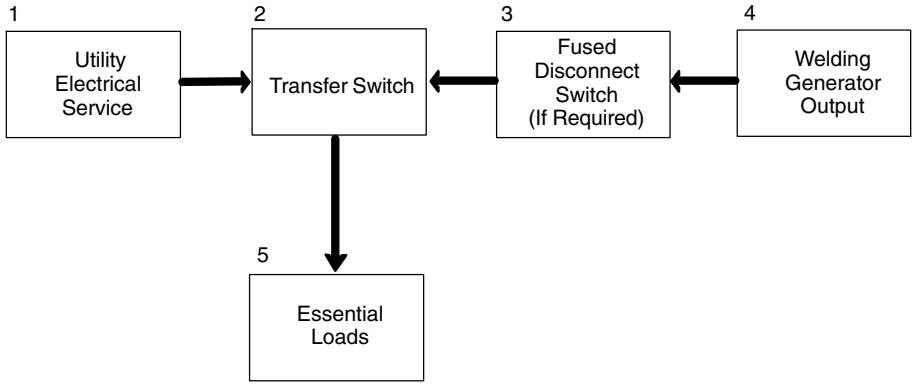

Have only qualified persons perform these connections according to all applicable codes and safety practices.

Properly install, ground, and operate this equipment according to its Owner's Manual and national, state, and local codes.

☞ *Customer-supplied equipment is required if generator will supply standby power during emergencies or power outages.*

1 Utility Electrical Service

2 Transfer Switch (Double-Throw)

Switch transfers the electrical load from electric utility service to the generator. Transfer load back to electric utility when service is restored.

Install correct switch (customer-supplied). Switch rating must be same as or greater than the branch overcurrent protection.

3 Fused Disconnect Switch

Install correct switch (customer-supplied) if required by electrical code.

4 Welding Generator Output

Generator output voltage and wiring must be consistent with regular (utility) system voltage and wiring.

Connect generator with temporary or permanent wiring suitable for the installation.

Turn off or unplug all equipment connected to generator before starting or stopping engine. When starting or stopping, the engine has low speed which causes low voltage and frequency.

5 Essential Loads

Generator output may not meet the electrical requirements of the premises. If generator does not produce enough output to meet all requirements, connect only essential loads (pumps, freezers, heaters, etc. – See Section 11-4).

11-11. Selecting Extension Cord (Use Shortest Cord Possible)

Cord Lengths for 120 Volt Loads

Use GFCI protection when operating auxiliary equipment. If unit does not have GFCI receptacles, use GFCI-protected extension cord. Do not use GFCI receptacles to power life support equipment.

Current (Amperes)	Load (Watts)	Maximum Allowable Cord Length in ft (m) for Conductor Size (AWG)*					
		4	6	8	10	12	14
5	600			350 (106)	225 (68)	137 (42)	100 (30)
7	840		400 (122)	250 (76)	150 (46)	100 (30)	62 (19)
10	1200	400 (122)	275 (84)	175 (53)	112 (34)	62 (19)	50 (15)
15	1800	300 (91)	175 (53)	112 (34)	75 (23)	37 (11)	30 (9)
20	2400	225 (68)	137 (42)	87 (26)	50 (15)	30 (9)	
25	3000	175 (53)	112 (34)	62 (19)	37 (11)		
30	3600	150 (46)	87 (26)	50 (15)	37 (11)		
35	4200	125 (38)	75 (23)	50 (15)			
40	4800	112 (34)	62 (19)	37 (11)			
45	5400	100 (30)	62 (19)				
50	6000	87 (26)	50 (15)				

*Conductor size is based on maximum 2% voltage drop

Cord Lengths for 240 Volt Loads

Use GFCI protection when operating auxiliary equipment. If unit does not have GFCI receptacles, use GFCI-protected extension cord. Do not use GFCI receptacles to power life support equipment.

Current (Amperes)	Load (Watts)	Maximum Allowable Cord Length in ft (m) for Conductor Size (AWG)*					
		4	6	8	10	12	14
5	1200			700 (213)	450 (137)	225 (84)	200 (61)
7	1680		800 (244)	500 (152)	300 (91)	200 (61)	125 (38)
10	2400	800 (244)	550 (168)	350 (107)	225 (69)	125 (38)	100 (31)
15	3600	600 (183)	350 (107)	225 (69)	150 (46)	75 (23)	60 (18)
20	4800	450 (137)	275 (84)	175 (53)	100 (31)	60 (18)	
25	6000	350 (107)	225 (69)	125 (38)	75 (23)		
30	7000	300 (91)	175 (53)	100 (31)	75 (23)		
35	8400	250 (76)	150 (46)	100 (31)			
40	9600	225 (69)	125 (38)	75 (23)			
45	10,800	200 (61)	125 (38)				
50	12,000	175 (53)	100 (31)				

*Conductor size is based on maximum 2% voltage drop

Warranty Questions?

Call
1-800-4-A-MILLER
for your local
Miller distributor.

Your distributor also gives you ...

Service
You always get the fast, reliable response you need. Most replacement parts can be in your hands in 24 hours.

Support
Need fast answers to the tough welding questions? Contact your distributor. The expertise of the distributor and Miller is there to help you, every step of the way.

TRUE BLUE® WARRANTY

Effective January 1, 2012
(Equipment with a serial number preface of MC or newer)

This limited warranty supersedes all previous Miller warranties and is exclusive with no other guarantees or warranties expressed or implied.

LIMITED WARRANTY – Subject to the terms and conditions below, Miller Electric Mfg. Co., Appleton, Wisconsin, warrants to its original retail purchaser that new Miller equipment sold after the effective date of this limited warranty is free of defects in material and workmanship at the time it is shipped by Miller. THIS WARRANTY IS EXPRESSLY IN LIEU OF ALL OTHER WARRANTIES, EXPRESS OR IMPLIED, INCLUDING THE WARRANTIES OF MERCHANTABILITY AND FITNESS.

Within the warranty periods listed below, Miller will repair or replace any warranted parts or components that fail due to such defects in material or workmanship. Miller must be notified in writing within thirty (30) days of such defect or failure, at which time Miller will provide instructions on the warranty claim procedures to be followed.

Miller shall honor warranty claims on warranted equipment listed below in the event of such a failure within the warranty time periods. All warranty time periods start on the delivery date of the equipment to the original end-user purchaser, and not to exceed one year after the equipment is shipped to a North American distributor or eighteen months after the equipment is shipped to an International distributor.

1. 5 Years Parts — 3 Years Labor
   * Original Main Power Rectifiers Only to Include SCRs, Diodes, and Discrete Rectifier Modules
2. 3 Years — Parts and Labor
   * Engine Driven Welding Generators **(NOTE: Engines are Warranted Separately by the Engine Manufacturer.)**
   * Inverter Power Sources (Unless Otherwise Stated)
   * Plasma Arc Cutting Power Sources
   * Process Controllers
   * Semi-Automatic and Automatic Wire Feeders
   * Smith 30 Series Flowgauge and Flowmeter Regulators (No Labor)
   * Transformer/Rectifier Power Sources
   * Water Coolant Systems (Integrated)
3. 2 Years — Parts
   * Auto-Darkening Helmet Lenses (No Labor)
4. 1 Year — Parts and Labor Unless Specified
   * Automatic Motion Devices
   * CoolBelt and CoolBand Blower Unit (No Labor)
   * External Monitoring Equipment and Sensors
   * Field Options (NOTE: Field options are covered for the remaining warranty period of the product they are installed in, or for a minimum of one year — whichever is greater.)
   * Flowgauge and Flowmeter Regulators (No Labor)
   * RFCS Foot Controls (Except RFCS-RJ45)
   * Fume Extractors
   * HF Units
   * ICE/XT Plasma Cutting Torches (No Labor)
   * Induction Heating Power Sources, Coolers **(NOTE: Digital Recorders are Warranted Separately by the Manufacturer.)**
   * Load Banks
   * Motor Driven Guns (w/exception of Spoolmate Spoolguns)
   * PAPR Blower Unit (No Labor)
   * Positioners and Controllers
   * Racks
   * Running Gear/Trailers
   * Spot Welders
   * Subarc Wire Drive Assemblies
   * Water Coolant Systems (Non-Integrated)
   * Weldcraft-Branded TIG Torches (No Labor)
   * Wireless Remote Foot/Hand Controls and Receivers
   * Work Stations/Weld Tables (No Labor)
5. 6 Months — Parts
   * Batteries
   * Bernard Guns (No Labor)
   * Tregaskiss Guns (No Labor)
6. 90 Days — Parts
   * Accessory (Kits)
   * Canvas Covers
   * Induction Heating Coils and Blankets, Cables, and Non-Electronic Controls
   * M-Guns
   * MIG Guns and Subarc (SAW) Guns
   * Remote Controls and RFCS-RJ45
   * Replacement Parts (No labor)
   * Roughneck Guns
   * Spoolmate Spoolguns

Miller's True Blue® Limited Warranty shall not apply to:

1. **Consumable components; such as contact tips, cutting nozzles, contactors, brushes, relays, work station table tops and welding curtains, or parts that fail due to normal wear. (Exception: brushes and relays are covered on all engine-driven products.)**
2. Items furnished by Miller, but manufactured by others, such as engines or trade accessories. These items are covered by the manufacturer's warranty, if any.
3. Equipment that has been modified by any party other than Miller, or equipment that has been improperly installed, improperly operated or misused based upon industry standards, or equipment which has not had reasonable and necessary maintenance, or equipment which has been used for operation outside of the specifications for the equipment.

MILLER PRODUCTS ARE INTENDED FOR PURCHASE AND USE BY COMMERCIAL/INDUSTRIAL USERS AND PERSONS TRAINED AND EXPERIENCED IN THE USE AND MAINTENANCE OF WELDING EQUIPMENT.

In the event of a warranty claim covered by this warranty, the exclusive remedies shall be, at Miller's option: (1) repair; or (2) replacement; or, where authorized in writing by Miller in appropriate cases, (3) the reasonable cost of repair or replacement at an authorized Miller service station; or (4) payment of or credit for the purchase price (less reasonable depreciation based upon actual use) upon return of the goods at customer's risk and expense. Miller's option of repair or replacement will be F.O.B., Factory at Appleton, Wisconsin, or F.O.B. at a Miller authorized service facility as determined by Miller. Therefore no compensation or reimbursement for transportation costs of any kind will be allowed.

TO THE EXTENT PERMITTED BY LAW, THE REMEDIES PROVIDED HEREIN ARE THE SOLE AND EXCLUSIVE REMEDIES. IN NO EVENT SHALL MILLER BE LIABLE FOR DIRECT, INDIRECT, SPECIAL, INCIDENTAL OR CONSEQUENTIAL DAMAGES (INCLUDING LOSS OF PROFIT), WHETHER BASED ON CONTRACT, TORT OR ANY OTHER LEGAL THEORY.

ANY EXPRESS WARRANTY NOT PROVIDED HEREIN AND ANY IMPLIED WARRANTY, GUARANTY OR REPRESENTATION AS TO PERFORMANCE, AND ANY REMEDY FOR BREACH OF CONTRACT TORT OR ANY OTHER LEGAL THEORY WHICH, BUT FOR THIS PROVISION, MIGHT ARISE BY IMPLICATION, OPERATION OF LAW, CUSTOM OF TRADE OR COURSE OF DEALING, INCLUDING ANY IMPLIED WARRANTY OF MERCHANTABILITY OR FITNESS FOR PARTICULAR PURPOSE, WITH RESPECT TO ANY AND ALL EQUIPMENT FURNISHED BY MILLER IS EXCLUDED AND DISCLAIMED BY MILLER.

Some states in the U.S.A. do not allow limitations of how long an implied warranty lasts, or the exclusion of incidental, indirect, special or consequential damages, so the above limitation or exclusion may not apply to you. This warranty provides specific legal rights, and other rights may be available, but may vary from state to state.

In Canada, legislation in some provinces provides for certain additional warranties or remedies other than as stated herein, and to the extent that they may not be waived, the limitations and exclusions set out above may not apply. This Limited Warranty provides specific legal rights, and other rights may be available, but may vary from province to province.

Owner's Record

Please complete and retain with your personal records.

Model Name Serial/Style Number

Purchase Date (Date which equipment was delivered to original customer.)

Distributor

Address

City

State Zip

For Service

Contact a DISTRIBUTOR or SERVICE AGENCY near you.

Always provide Model Name and Serial/Style Number.

Contact your Distributor for:	Welding Supplies and Consumables Options and Accessories Personal Safety Equipment Service and Repair Replacement Parts Training (Schools, Videos, Books) Technical Manuals (Servicing Information and Parts) Circuit Diagrams Welding Process Handbooks To locate a Distributor or Service Agency visit www.millerwelds.com or call 1-800-4-A-Miller
Contact the Delivering Carrier to:	File a claim for loss or damage during shipment. For assistance in filing or settling claims, contact your distributor and/or equipment manufacturer's Transportation Department.

Miller Electric Mfg. Co.
An Illinois Tool Works Company
1635 West Spencer Street
Appleton, WI 54914 USA

International Headquarters–USA
USA Phone: 920-735-4505 Auto-Attended
USA & Canada FAX: 920-735-4134
International FAX: 920-735-4125

For International Locations Visit
www.MillerWelds.com

ORIGINAL INSTRUCTIONS – PRINTED IN USA

© 2012 Miller Electric Mfg. Co. 2012–01