**OM-363** 213117AV

2020-06

**Processes**

TIG (GTAW) Welding

Stick (SMAW) Welding

**Description**

Arc Welding Power Source

# Syncrowave® 250 DX / 350 LX

## With Optional Running Gear And Cooler

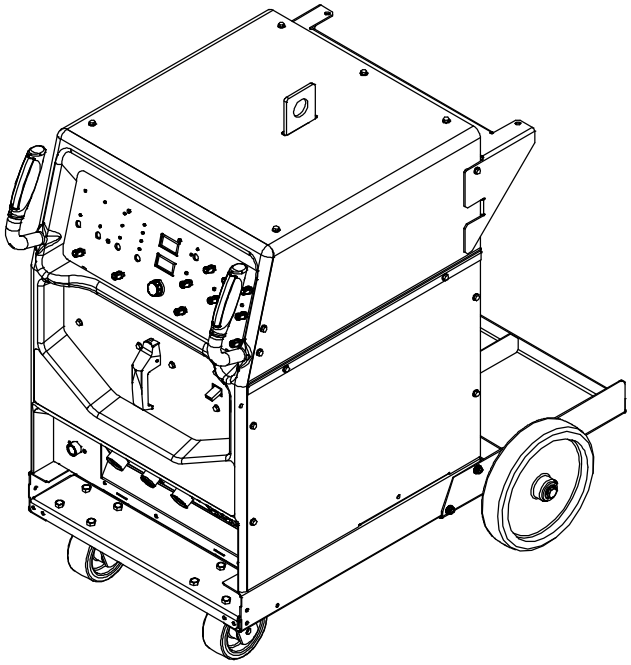

# OWNER'S MANUAL

**File: TIG (GTAW)**

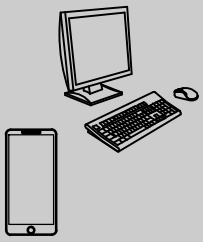

For product information, Owner's Manual translations, and more, visit

**www.MillerWelds.com**

# From Miller to You

*Thank you* and *congratulations* on choosing Miller. Now you can get the job done and get it done right. We know you don't have time to do it any other way.

That's why when Niels Miller first started building arc welders in 1929, he made sure his products offered long-lasting value and superior quality. Like you, his customers couldn't afford anything less. Miller products had to be more than the best they could be. They had to be the best you could buy.

Today, the people that build and sell Miller products continue the tradition. They're just as committed to providing equipment and service that meets the high standards of quality and value established in 1929.

This Owner's Manual is designed to help you get the most out of your Miller products. Please take time to read the Safety Precautions. They will help you protect yourself against potential hazards on the worksite. We've made installation and operation quick and easy. With Miller, you can count on years of reliable service with proper maintenance. And if for some reason the unit needs repair, there's a Troubleshooting section that will help you figure out what the problem is, and our extensive service network is there to help fix the problem. Warranty and maintenance information for your particular model are also provided.

Certified System ™

ISO 9001 Quality

Miller is the first welding equipment manufacturer in the U.S.A. to be registered to the ISO 9001 Quality System Standard.

Miller Electric manufactures a full line of welders and welding-related equipment. For information on other quality Miller products, contact your local Miller distributor to receive the latest full line catalog or individual specification sheets. **To locate your nearest distributor or service agency call 1-800-4-A-Miller, or visit us at www.MillerWelds.com on the web.**

TRUE BLUE® WARRANTY

Working as hard as you do – every power source from Miller is backed by the most hassle-free warranty in the business.

Miller®

# TABLE OF CONTENTS


**SECTION 1 – SAFETY PRECAUTIONS - READ BEFORE USING . . . . . 1**
1-1. Symbol Usage . . . . . 1
1-2. Arc Welding Hazards . . . . . 1
1-3. Additional Hazards For Installation, Operation, And Maintenance . . . . . 3
1-4. California Proposition 65 Warnings . . . . . 4
1-5. Principal Safety Standards . . . . . 4
1-6. EMF Information . . . . . 4
**SECTION 2 – CONSIGNES DE SÉCURITÉ – LIRE AVANT UTILISATION . . . . . 5**
2-1. Symboles utilisés . . . . . 5
2-2. Dangers relatifs au soudage à l'arc . . . . . 5
2-3. Dangers supplémentaires en relation avec l'installation, le fonctionnement et la maintenance . . . . . 7
2-4. Proposition californienne 65 Avertissements . . . . . 8
2-5. Principales normes de sécurité . . . . . 8
2-6. Informations relatives aux CEM . . . . . 8
**SECTION 3 – DEFINITIONS . . . . . 9**
3-1. Additional Safety Symbols And Definitions . . . . . 9
3-2. Miscellaneous Symbols And Definitions . . . . . 10
**SECTION 4 – SPECIFICATIONS . . . . . 13**
4-1. Serial Number And Rating Label Location . . . . . 13
4-2. Software Licensing Agreement . . . . . 13
4-3. Information About Default Weld Parameters And Settings . . . . . 13
4-4. Cooler Specifications . . . . . 13
4-5. Coolant Specifications . . . . . 13
4-6. Welding Power Source Specifications . . . . . 13
4-7. Duty Cycle And Overheating . . . . . 15
4-8. Volt-Ampere Curves . . . . . 16
4-9. Dimensions And Weights . . . . . 17
4-10. Environmental Specifications . . . . . 17
**SECTION 5 – INSTALLATION . . . . . 19**
5-1. Selecting A Location . . . . . 19
5-2. Selecting Cable Sizes . . . . . 20
5-3. Weld Output Terminals . . . . . 20
5-4. Remote 14 Receptacle Information . . . . . 21
5-5. Shielding Gas Connections And 115 Volts AC Cooler Receptacle . . . . . 21
5-6. TIG Connections With A Two-Piece Air-Cooled Torch . . . . . 22
5-7. TIG Connections With A One-Piece Air-Cooled Torch . . . . . 22
5-8. Front Panel Display For TIG HF Impulse DCEN (Direct Current Electrode Negative) . . . . . 23
5-9. Front Panel Display For TIG AC . . . . . 24
5-10. Optional Cooler Connections . . . . . 25
5-11. Stick Connections . . . . . 26
5-12. Front Panel Display For Stick DCEP (Direct Current Electrode Positive) . . . . . 27
5-13. Front Panel Display For Stick AC . . . . . 28
5-14. Electrical Service Guide . . . . . 29
5-15. Placing Jumper Links . . . . . 31
5-16. Connecting Input Power . . . . . 32
**SECTION 6 – OPERATION . . . . . 34**
6-1. Controls (350 LX Nameplates Shown) . . . . . 34
6-2. Output Selector Switch . . . . . 35
6-3. Process Control . . . . . 35
6-4. Amperage Control . . . . . 35
6-5. Output Control . . . . . 36
6-6. 4T, 4T Momentary, And Mini Logic Trigger Operation (Requires Optional Sequence Controls) . . . . . 38
6-7. Reconfiguring Trigger Hold For 4T And Mini Logic Control . . . . . 40

# TABLE OF CONTENTS


**SECTION 6 – OPERATION** . . . . . **34**
6-8. Selecting TIG Starting Characteristics Using Syncro-Start™ Technology . . . . . 41
6-9. Start Mode . . . . . 42
6-10. Balance/DIG Control . . . . . 43
6-11. Preflow Time Control . . . . . 44
6-12. Pulse Controls (Standard On 350 LX Models, Optional On 250 DX Models) . . . . . 45
6-13. Sequence Controls (Optional) . . . . . 46
6-14. Initial Time Control And Initial Amperage Control . . . . . 46
6-15. Final Slope Control And Final Amperage Control . . . . . 47
6-16. Spot Time Control . . . . . 47
6-17. Timer/Cycle Counter . . . . . 48
6-18. Resetting Unit To Factory Default Settings (All Models) . . . . . 49
**SECTION 7 – MAINTENANCE** . . . . . **50**
7-1. Routine Welding Power Source Maintenance . . . . . 50
7-2. Supplementary Protector CB1 . . . . . 50
7-3. Adjusting Spark Gaps . . . . . 51
7-4. Routine Maintenance For Optional Cooler . . . . . 51
7-5. Coolant Maintenance . . . . . 52
**SECTION 8 – TROUBLESHOOTING** . . . . . **53**
8-1. Voltmeter/Ammeter Help Displays . . . . . 53
8-2. Troubleshooting The Welding Power Source . . . . . 54
8-3. Troubleshooting The Optional Cooler . . . . . 55
**SECTION 9 – PARTS LIST** . . . . . **55**
9-1. Recommended Spare Parts . . . . . 55
**SECTION 10 – ELECTRICAL DIAGRAMS** . . . . . **56**
**SECTION 11 – HIGH FREQUENCY** . . . . . **61**
11-1. Welding Processes Requiring High Frequency . . . . . 61
11-2. Installation Showing Possible Sources Of HF Interference . . . . . 61
11-3. Recommended Installation To Reduce HF Interference . . . . . 62
**SECTION 12 – SELECTING AND PREPARING A TUNGSTEN FOR DC OR AC PHASE MACHINE WELDING** . . . . . **63**
12-1. Selecting Tungsten Electrode (Wear Clean Gloves To Prevent Contamination Of Tungsten) . . . . . 63
12-2. Preparing Tungsten Electrode For Welding With Phase Control Machines . . . . . 64
**SECTION 13 – GUIDELINES FOR TIG WELDING (GTAW)** . . . . . **65**
13-1. Positioning The Torch . . . . . 65
13-2. Torch Movement During Welding . . . . . 66
13-3. Positioning Torch Tungsten For Various Weld Joints . . . . . 66
**WARRANTY**
**COMPLETE PARTS LIST – Available at www.MillerWelds.com**

# SECTION 1 – SAFETY PRECAUTIONS - READ BEFORE USING



**Protect yourself and others from injury — read, follow, and save these important safety precautions and operating instructions.**

## 1-1. Symbol Usage

**DANGER! – Indicates a hazardous situation which, if not avoided, will result in death or serious injury. The possible hazards are shown in the adjoining symbols or explained in the text.**

**Indicates a hazardous situation which, if not avoided, could result in death or serious injury. The possible hazards are shown in the adjoining symbols or explained in the text.**

***NOTICE*** *– Indicates statements not related to personal injury.*

☞ *Indicates special instructions.*

This group of symbols means Warning! Watch Out! ELECTRIC SHOCK, MOVING PARTS, and HOT PARTS hazards. Consult symbols and related instructions below for necessary actions to avoid these hazards.

## 1-2. Arc Welding Hazards

**The symbols shown below are used throughout this manual to call attention to and identify possible hazards. When you see the symbol, watch out, and follow the related instructions to avoid the hazard. The safety information given below is only a summary of the more complete safety information found in the Principal Safety Standards listed in Section 1-5. Read and follow all Safety Standards.**

**Only qualified persons should install, operate, maintain, and repair this equipment. A qualified person is defined as one who, by possession of a recognized degree, certificate, or professional standing, or who by extensive knowledge, training and experience, has successfully demonstrated the ability to solve or resolve problems relating to the subject matter, the work, or the project and has received safety training to recognize and avoid the hazards involved.**

**During operation, keep everybody, especially children, away.**

### ELECTRIC SHOCK can kill.

Touching live electrical parts can cause fatal shocks or severe burns. The electrode and work circuit is electrically live whenever the output is on. The input power circuit and machine internal circuits are also live when power is on. In semiautomatic or automatic wire welding, the wire, wire reel, drive roll housing, and all metal parts touching the welding wire are electrically live. Incorrectly installed or improperly grounded equipment is a hazard.

- Do not touch live electrical parts.
- Wear dry, hole-free insulating gloves and body protection.
- Insulate yourself from work and ground using dry insulating mats or covers big enough to prevent any physical contact with the work or ground.
- Do not use AC weld output in damp, wet, or confined spaces, or if there is a danger of falling.
- Use AC output ONLY if required for the welding process.
- If AC output is required, use remote output control if present on unit.
- Additional safety precautions are required when any of the following electrically hazardous conditions are present: in damp locations or while wearing wet clothing; on metal structures such as floors, gratings, or scaffolds; when in cramped positions such as sitting, kneeling, or lying; or when there is a high risk of unavoidable or accidental contact with the workpiece or ground. For these conditions, use the following equipment in order presented: 1) a semiautomatic DC constant voltage (wire) welder, 2) a DC manual (stick) welder, or 3) an AC welder with reduced open-circuit voltage. In most situations, use of a DC, constant voltage wire welder is recommended. And, do not work alone!
- Disconnect input power or stop engine before installing or servicing this equipment. Lockout/tagout input power according to OSHA 29 CFR 1910.147 (see Safety Standards).
- Properly install, ground, and operate this equipment according to its Owner's Manual and national, state, and local codes.
- Always verify the supply ground – check and be sure that input power cord ground wire is properly connected to ground terminal in disconnect box or that cord plug is connected to a properly grounded receptacle outlet.
- When making input connections, attach proper grounding conductor first – double-check connections.
- Keep cords dry, free of oil and grease, and protected from hot metal and sparks.
- Frequently inspect input power cord and ground conductor for damage or bare wiring – replace immediately if damaged – bare wiring can kill.
- Turn off all equipment when not in use.
- Do not use worn, damaged, undersized, or repaired cables.
- Do not drape cables over your body.
- If earth grounding of the workpiece is required, ground it directly with a separate cable.
- Do not touch electrode if you are in contact with the work, ground, or another electrode from a different machine.
- Do not touch electrode holders connected to two welding machines at the same time since double open-circuit voltage will be present.
- Use only well-maintained equipment. Repair or replace damaged parts at once. Maintain unit according to manual.
- Wear a safety harness if working above floor level.
- Keep all panels and covers securely in place.
- Clamp work cable with good metal-to-metal contact to workpiece or worktable as near the weld as practical.
- Insulate work clamp when not connected to workpiece to prevent contact with any metal object.
- Do not connect more than one electrode or work cable to any single weld output terminal. Disconnect cable for process not in use.
- Use GFCI protection when operating auxiliary equipment in damp or wet locations.

### SIGNIFICANT DC VOLTAGE exists in inverter welding power sources AFTER removal of input power.

- Turn off unit, disconnect input power, and discharge input capacitors according to instructions in Manual before touching any parts.

### HOT PARTS can burn.

- Do not touch hot parts bare handed.
- Allow cooling period before working on equipment.
- To handle hot parts, use proper tools and/or wear heavy, insulated welding gloves and clothing to prevent burns.

## FUMES AND GASES can be hazardous.

Welding produces fumes and gases. Breathing these fumes and gases can be hazardous to your health.

- Keep your head out of the fumes. Do not breathe the fumes.
- Ventilate the work area and/or use local forced ventilation at the arc to remove welding fumes and gases. The recommended way to determine adequate ventilation is to sample for the composition and quantity of fumes and gases to which personnel are exposed.
- If ventilation is poor, wear an approved air-supplied respirator.
- Read and understand the Safety Data Sheets (SDSs) and the manufacturer's instructions for adhesives, coatings, cleaners, consumables, coolants, degreasers, fluxes, and metals.
- Work in a confined space only if it is well ventilated, or while wearing an air-supplied respirator. Always have a trained watchperson nearby. Welding fumes and gases can displace air and lower the oxygen level causing injury or death. Be sure the breathing air is safe.
- Do not weld in locations near degreasing, cleaning, or spraying operations. The heat and rays of the arc can react with vapors to form highly toxic and irritating gases.
- Do not weld on coated metals, such as galvanized, lead, or cadmium plated steel, unless the coating is removed from the weld area, the area is well ventilated, and while wearing an air-supplied respirator. The coatings and any metals containing these elements can give off toxic fumes if welded.

## ARC RAYS can burn eyes and skin.

Arc rays from the welding process produce intense visible and invisible (ultraviolet and infrared) rays that can burn eyes and skin. Sparks fly off from the weld.

- Wear an approved welding helmet fitted with a proper shade of filter lenses to protect your face and eyes from arc rays and sparks when welding or watching (see ANSI Z49.1 and Z87.1 listed in Safety Standards).
- Wear approved safety glasses with side shields under your helmet.
- Use protective screens or barriers to protect others from flash, glare and sparks; warn others not to watch the arc.
- Wear body protection made from durable, flame–resistant material (leather, heavy cotton, wool). Body protection includes oil-free clothing such as leather gloves, heavy shirt, cuffless trousers, high shoes, and a cap.

## WELDING can cause fire or explosion.

Welding on closed containers, such as tanks, drums, or pipes, can cause them to blow up. Sparks can fly off from the welding arc. The flying sparks, hot workpiece, and hot equipment can cause fires and burns. Accidental contact of electrode to metal objects can cause sparks, explosion, overheating, or fire. Check and be sure the area is safe before doing any welding.

- Remove all flammables within 35 ft (10.7 m) of the welding arc. If this is not possible, tightly cover them with approved covers.
- Do not weld where flying sparks can strike flammable material.
- Protect yourself and others from flying sparks and hot metal.
- Be alert that welding sparks and hot materials from welding can easily go through small cracks and openings to adjacent areas.
- Watch for fire, and keep a fire extinguisher nearby.
- Be aware that welding on a ceiling, floor, bulkhead, or partition can cause fire on the hidden side.
- Do not cut or weld on tire rims or wheels. Tires can explode if heated. Repaired rims and wheels can fail. See OSHA 29 CFR 1910.177 listed in Safety Standards.
- Do not weld on containers that have held combustibles, or on closed containers such as tanks, drums, or pipes unless they are properly prepared according to AWS F4.1 and AWS A6.0 (see Safety Standards).
- Do not weld where the atmosphere can contain flammable dust, gas, or liquid vapors (such as gasoline).
- Connect work cable to the work as close to the welding area as practical to prevent welding current from traveling long, possibly unknown paths and causing electric shock, sparks, and fire hazards.
- Do not use welder to thaw frozen pipes.
- Remove stick electrode from holder or cut off welding wire at contact tip when not in use.
- Wear body protection made from durable, flame–resistant material (leather, heavy cotton, wool). Body protection includes oil-free clothing such as leather gloves, heavy shirt, cuffless trousers, high shoes, and a cap.
- Remove any combustibles, such as a butane lighter or matches, from your person before doing any welding.
- After completion of work, inspect area to ensure it is free of sparks, glowing embers, and flames.
- Use only correct fuses or circuit breakers. Do not oversize or bypass them.
- Follow requirements in OSHA 1910.252 (a) (2) (iv) and NFPA 51B for hot work and have a fire watcher and extinguisher nearby.
- Read and understand the Safety Data Sheets (SDSs) and the manufacturer's instructions for adhesives, coatings, cleaners, consumables, coolants, degreasers, fluxes, and metals.

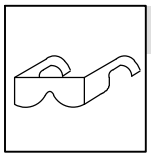

## FLYING METAL or DIRT can injure eyes.

- Welding, chipping, wire brushing, and grinding cause sparks and flying metal. As welds cool, they can throw off slag.
- Wear approved safety glasses with side shields even under your welding helmet.

## BUILDUP OF GAS can injure or kill.

- Shut off compressed gas supply when not in use.
- Always ventilate confined spaces or use approved air-supplied respirator.

## ELECTRIC AND MAGNETIC FIELDS (EMF) can affect Implanted Medical Devices.

- Wearers of Pacemakers and other Implanted Medical Devices should keep away.
- Implanted Medical Device wearers should consult their doctor and the device manufacturer before going near arc welding, spot welding, gouging, plasma arc cutting, or induction heating operations.

## NOISE can damage hearing.

Noise from some processes or equipment can damage hearing.

- Wear approved ear protection if noise level is high.

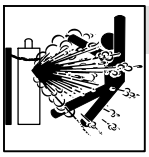

### CYLINDERS can explode if damaged.

Compressed gas cylinders contain gas under high pressure. If damaged, a cylinder can explode. Since gas cylinders are normally part of the welding process, be sure to treat them carefully.

- Protect compressed gas cylinders from excessive heat, mechanical shocks, physical damage, slag, open flames, sparks, and arcs.
- Install cylinders in an upright position by securing to a stationary support or cylinder rack to prevent falling or tipping.
- Keep cylinders away from any welding or other electrical circuits.
- Never drape a welding torch over a gas cylinder.
- Never allow a welding electrode to touch any cylinder.
- Never weld on a pressurized cylinder – explosion will result.
- Use only correct compressed gas cylinders, regulators, hoses, and fittings designed for the specific application; maintain them and associated parts in good condition.
- Turn face away from valve outlet when opening cylinder valve. Do not stand in front of or behind the regulator when opening the valve.
- Keep protective cap in place over valve except when cylinder is in use or connected for use.
- Use the proper equipment, correct procedures, and sufficient number of persons to lift, move, and transport cylinders.
- Read and follow instructions on compressed gas cylinders, associated equipment, and Compressed Gas Association (CGA) publication P-1 listed in Safety Standards.

## 1-3. Additional Hazards For Installation, Operation, And Maintenance

### FIRE OR EXPLOSION hazard.

- Do not install or place unit on, over, or near combustible surfaces.
- Do not install unit near flammables.
- Do not overload building wiring – be sure power supply system is properly sized, rated, and protected to handle this unit.

### FALLING EQUIPMENT can injure.

- Use lifting eye to lift unit only, NOT running gear, gas cylinders, or any other accessories.
- Use correct procedures and equipment of adequate capacity to lift and support unit.
- If using lift forks to move unit, be sure forks are long enough to extend beyond opposite side of unit.
- Keep equipment (cables and cords) away from moving vehicles when working from an aerial location.
- Follow the guidelines in the Applications Manual for the Revised NIOSH Lifting Equation (Publication No. 94–110) when manually lifting heavy parts or equipment.

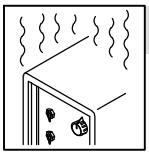

### OVERUSE can cause OVERHEATING

- Allow cooling period; follow rated duty cycle.
- Reduce current or reduce duty cycle before starting to weld again.
- Do not block or filter airflow to unit.

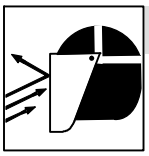

### FLYING SPARKS can injure.

- Wear a face shield to protect eyes and face.
- Shape tungsten electrode only on grinder with proper guards in a safe location wearing proper face, hand, and body protection.
- Sparks can cause fires — keep flammables away.

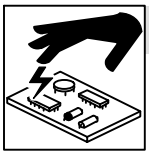

### STATIC (ESD) can damage PC boards.

- Put on grounded wrist strap BEFORE handling boards or parts.
- Use proper static-proof bags and boxes to store, move, or ship PC boards.

### MOVING PARTS can injure.

- Keep away from moving parts.
- Keep away from pinch points such as drive rolls.

### WELDING WIRE can injure.

- Do not press gun trigger until instructed to do so.
- Do not point gun toward any part of the body, other people, or any metal when threading welding wire.

### BATTERY EXPLOSION can injure.

- Do not use welder to charge batteries or jump start vehicles unless it has a battery charging feature designed for this purpose.

### MOVING PARTS can injure.

- Keep away from moving parts such as fans.
- Keep all doors, panels, covers, and guards closed and securely in place.
- Have only qualified persons remove doors, panels, covers, or guards for maintenance and troubleshooting as necessary.
- Reinstall doors, panels, covers, or guards when maintenance is finished and before reconnecting input power.

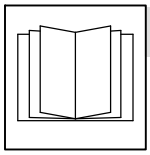

### READ INSTRUCTIONS.

- Read and follow all labels and the Owner's Manual carefully before installing, operating, or servicing unit. Read the safety information at the beginning of the manual and in each section.
- Use only genuine replacement parts from the manufacturer.
- Perform installation, maintenance, and service according to the Owner's Manuals, industry standards, and national, state, and local codes.

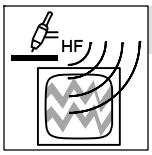


**H.F. RADIATION can cause interference.**

- High-frequency (H.F.) can interfere with radio navigation, safety services, computers, and communications equipment.

- Have only qualified persons familiar with electronic equipment perform this installation.
- The user is responsible for having a qualified electrician promptly correct any interference problem resulting from the installation.
- If notified by the FCC about interference, stop using the equipment at once.
- Have the installation regularly checked and maintained.
- Keep high-frequency source doors and panels tightly shut, keep spark gaps at correct setting, and use grounding and shielding to minimize the possibility of interference.

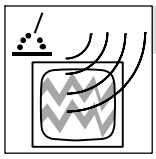

**ARC WELDING can cause interference.**

- Electromagnetic energy can interfere with sensitive electronic equipment such as computers and computer-driven equipment such as robots.

- Be sure all equipment in the welding area is electromagnetically compatible.
- To reduce possible interference, keep weld cables as short as possible, close together, and down low, such as on the floor.
- Locate welding operation 100 meters from any sensitive electronic equipment.
- Be sure this welding machine is installed and grounded according to this manual.
- If interference still occurs, the user must take extra measures such as moving the welding machine, using shielded cables, using line filters, or shielding the work area.

## 1-4. California Proposition 65 Warnings

**WARNING: This product can expose you to chemicals including lead, which are known to the state of California to cause cancer and birth defects or other reproductive harm.**

**For more information, go to www.P65Warnings.ca.gov.**

## 1-5. Principal Safety Standards

*Safety in Welding, Cutting, and Allied Processes,* American Welding Society standard ANSI Standard Z49.1. Website: www.aws.org.

*Safe Practice For Occupational And Educational Eye And Face Protection,* ANSI Standard Z87.1 from American National Standards Institute. Website: www.ansi.org.

*Safe Practices for the Preparation of Containers and Piping for Welding and Cutting,* American Welding Society Standard AWS F4.1 from Global Engineering Documents. Website: www.global.ihs.com.

*Safe Practices for Welding and Cutting Containers that have Held Combustibles,* American Welding Society Standard AWS A6.0 from Global Engineering Documents. Website: www.global.ihs.com.

*National Electrical Code,* NFPA Standard 70 from National Fire Protection Association. Website: www.nfpa.org and www. sparky.org.

*Safe Handling of Compressed Gases in Cylinders,* CGA Pamphlet P-1 from Compressed Gas Association. Website:www.cganet.com.

*Safety in Welding, Cutting, and Allied Processes,* CSA Standard W117.2 from Canadian Standards Association. Website: www.csagroup.org.

*Standard for Fire Prevention During Welding, Cutting, and Other Hot Work,* NFPA Standard 51B from National Fire Protection Association. Website: www.nfpa.org.

OSHA *Occupational Safety and Health Standards for General Industry*, Title 29, Code of Federal Regulations (CFR), Part 1910.177 Subpart N, Part 1910 Subpart Q, and Part 1926, Subpart J. Website: www.osha.gov.

OSHA *Important Note Regarding the ACGIH TLV, Policy Statement on the Uses of TLVs and BEIs.* Website: www.osha.gov.

*Applications Manual for the Revised NIOSH Lifting Equation* from the National Institute for Occupational Safety and Health (NIOSH). Website: www.cdc.gov/NIOSH.

## 1-6. EMF Information

Electric current flowing through any conductor causes localized electric and magnetic fields (EMF). The current from arc welding (and allied processes including spot welding, gouging, plasma arc cutting, and induction heating operations) creates an EMF field around the welding circuit. EMF fields can interfere with some medical implants, e.g. pacemakers. Protective measures for persons wearing medical implants have to be taken. For example, restrict access for passers–by or conduct individual risk assessment for welders. All welders should use the following procedures in order to minimize exposure to EMF fields from the welding circuit:

1. Keep cables close together by twisting or taping them, or using a cable cover.
2. Do not place your body between welding cables. Arrange cables to one side and away from the operator.
3. Do not coil or drape cables around your body.
4. Keep head and trunk as far away from the equipment in the welding circuit as possible.
5. Connect work clamp to workpiece as close to the weld as possible.
6. Do not work next to, sit or lean on the welding power source.
7. Do not weld whilst carrying the welding power source or wire feeder.

**About Implanted Medical Devices:**

Implanted Medical Device wearers should consult their doctor and the device manufacturer before performing or going near arc welding, spot welding, gouging, plasma arc cutting, or induction heating operations. If cleared by your doctor, then following the above procedures is recommended.

**Pour écarter les risques de blessure pour vous–même et pour autrui — lire, appliquer et ranger en lieu sûr ces consignes relatives aux précautions de sécurité et au mode opératoire.**

## 2-1. Symboles utilisés

**DANGER! – Indique une situation dangereuse qui si on l'évite pas peut donner la mort ou des blessures graves. Les dangers possibles sont montrés par les symboles joints ou sont expliqués dans le texte.**

**Indique une situation dangereuse qui si on l'évite pas peut donner la mort ou des blessures graves. Les dangers possibles sont montrés par les symboles joints ou sont expliqués dans le texte.**

***AVIS*** *– Indique des déclarations pas en relation avec des blessures personnelles.*

☞ *Indique des instructions spécifiques.*

Ce groupe de symboles veut dire Avertissement! Attention! DANGER DE CHOC ELECTRIQUE, PIECES EN MOUVEMENT, et PIECES CHAUDES. Reportez–vous aux symboles et aux directives ci–dessous afin de connaître les mesures à prendre pour éviter tout danger.

## 2-2. Dangers relatifs au soudage à l'arc

**Les symboles représentés ci-dessous sont utilisés dans ce manuel pour attirer l'attention et identifier les dangers possibles. En présence de l'un de ces symboles, prendre garde et suivre les instructions afférentes pour éviter tout risque. Les consignes de sécurité présentées ci–après ne font que résumer les informations contenues dans les principales normes de sécurité énumérées à la section 2-5. Lire et observer toutes les normes de sécurité.**

**L'installation, l'utilisation, l'entretien et les réparations ne doivent être confiés qu'à des personnes qualifiées. Une personne qualifiée est définie comme celle qui, par la possession d'un diplôme reconnu, d'un certificat ou d'un statut professionnel, ou qui, par une connaissance, une formation et une expérience approfondies, a démontré avec succès sa capacité à résoudre les problèmes liés à la tâche, le travail ou le projet et a reçu une formation en sécurité afin de reconnaître et d'éviter les risques inhérents.**

**Pendant le fonctionnement, maintenir à distance toutes les personnes, notamment les enfants de l'appareil.**

### UNE DÉCHARGE ÉLECTRIQUE peut entraîner la mort.

Le contact d'organes électriques sous tension peut provoquer des accidents mortels ou des brûlures graves. Le circuit de l'électrode et de la pièce est sous tension lorsque le courant est délivré à la sortie. Le circuit d'alimentation et les circuits internes de la machine sont également sous tension lorsque l'alimentation est sur Marche. Dans le mode de soudage avec du fil, le fil, le dérouleur, le bloc de commande du rouleau et toutes les parties métalliques en contact avec le fil sont sous tension électrique. Un équipement installé ou mis à la terre de manière incorrecte ou impropre constitue un danger.

- Ne pas toucher aux pièces électriques sous tension.
- Porter des gants isolants et des vêtements de protection secs et sans trous.
- S'isoler de la pièce à couper et du sol en utilisant des housses ou des tapis assez grands afin d'éviter tout contact physique avec la pièce à couper ou le sol.
- Ne pas utiliser de sortie de soudage CA dans des zones humides ou confinées ou s'il y a un risque de chute.
- Se servir d'une source électrique à courant électrique UNIQUEMENT si le procédé de soudage le demande.
- Si l'utilisation d'une source électrique à courant électrique s'avère nécessaire, se servir de la fonction de télécommande si l'appareil en est équipé.
- D'autres consignes de sécurité sont nécessaires dans les conditions suivantes : risques électriques dans un environnement humide ou si l'on porte des vêtements mouillés ; sur des structures métalliques telles que sols, grilles ou échafaudages ; en position coincée comme assise, à genoux ou couchée ; ou s'il y a un risque élevé de contact inévitable ou accidentel avec la pièce à souder ou le sol. Dans ces conditions, utiliser les équipements suivants, dans l'ordre indiqué : 1) un poste à souder DC à tension constante (à fil), 2) un poste à souder DC manuel (électrode) ou 3) un poste à souder AC à tension à vide réduite. Dans la plupart des situations, l'utilisation d'un poste à souder DC à fil à tension constante est recommandée. En outre, ne pas travailler seul !
- Couper l'alimentation ou arrêter le moteur avant de procéder à l'installation, à la réparation ou à l'entretien de l'appareil. Déverrouiller l'alimentation selon la norme OSHA 29 CFR 1910.147 (voir normes de sécurité).
- Installez, mettez à la terre et utilisez correctement cet équipement conformément à son Manuel d'Utilisation et aux réglementations nationales, gouvernementales et locales.
- Toujours vérifier la terre du cordon d'alimentation. Vérifier et s'assurer que le fil de terre du cordon d'alimentation est bien raccordé à la borne de terre du sectionneur ou que la fiche du cordon est raccordée à une prise correctement mise à la terre.
- En effectuant les raccordements d'entrée, fixer d'abord le conducteur de mise à la terre approprié et contre-vérifier les connexions.
- Les câbles doivent être exempts d'humidité, d'huile et de graisse; protégez–les contre les étincelles et les pièces métalliques chaudes.
- Vérifier fréquemment le cordon d'alimentation et le conducteur de mise à la terre afin de s'assurer qu'il n'est pas altéré ou dénudé –, le remplacer immédiatement s'il l'est –. Un fil dénudé peut entraîner la mort.
- L'équipement doit être hors tension lorsqu'il n'est pas utilisé.
- Ne pas utiliser des câbles usés, endommagés, de grosseur insuffisante ou mal épissés.
- Ne pas enrouler les câbles autour du corps.
- Si la pièce soudée doit être mise à la terre, le faire directement avec un câble distinct.
- Ne pas toucher l'électrode quand on est en contact avec la pièce, la terre ou une électrode provenant d'une autre machine.
- Ne pas toucher des porte électrodes connectés à deux machines en même temps à cause de la présence d'une tension à vide doublée.
- N'utiliser qu'un matériel en bon état. Réparer ou remplacer sur-le-champ les pièces endommagées. Entretenir l'appareil conformément à ce manuel.
- Porter un harnais de sécurité si l'on doit travailler au-dessus du sol.
- S'assurer que tous les panneaux et couvercles sont correctement en place.
- Fixer le câble de retour de façon à obtenir un bon contact métal-métal avec la pièce à souder ou la table de travail, le plus près possible de la soudure.
- Isoler la pince de masse quand pas mis à la pièce pour éviter le contact avec tout objet métallique.
- Ne pas raccorder plus d'une électrode ou plus d'un câble de masse à une même borne de sortie de soudage. Débrancher le câble pour le procédé non utilisé.
- Utiliser une protection différentielle lors de l'utilisation d'un équipement auxiliaire dans des endroits humides ou mouillés.

### Il reste une TENSION DC NON NÉGLIGEABLE dans les sources de soudage onduleur UNE FOIS l'alimentation coupée.

- Éteignez l'unité, débranchez le courant électrique, et déchargez les condensateurs d'alimentation selon les instructions indiquées dans le manuel avant de toucher les pièces.

## LES PIÈCES CHAUDES peuvent provoquer des brûlures.

- Ne pas toucher à mains nues les parties chaudes.
- Prévoir une période de refroidissement avant de travailler à l'équipement.
- Ne pas toucher aux pièces chaudes, utiliser les outils recommandés et porter des gants de soudage et des vêtements épais pour éviter les brûlures.

## LES FUMÉES ET LES GAZ peuvent être dangereux.

Le soudage génère des fumées et des gaz. Leur inhalation peut être dangereux pour votre santé.

- Eloigner votre tête des fumées. Ne pas respirer les fumées.
- À l'intérieur, ventiler la zone et/ou utiliser une ventilation forcée au niveau de l'arc pour l'évacuation des fumées et des gaz de soudage. Pour déterminer la bonne ventilation, il est recommandé de procéder à un prélèvement pour la composition et la quantité de fumées et de gaz auxquelles est exposé le personnel.
- Si la ventilation est médiocre, porter un respirateur anti-vapeurs approuvé.
- Lire et comprendre les fiches de données de sécurité et les instructions du fabricant concernant les adhésifs, les revêtements, les nettoyants, les consommables, les produits de refroidissement, les dégraisseurs, les flux et les métaux.
- Travailler dans un espace fermé seulement s'il est bien ventilé ou en portant un respirateur à alimentation d'air. Demander toujours à un surveillant dûment formé de se tenir à proximité. Des fumées et des gaz de soudage peuvent déplacer l'air et abaisser le niveau d'oxygène provoquant des blessures ou des accidents mortels. S'assurer que l'air de respiration ne présente aucun danger.
- Ne pas souder dans des endroits situés à proximité d'opérations de dégraissage, de nettoyage ou de pulvérisation. La chaleur et les rayons de l'arc peuvent réagir en présence de vapeurs et former des gaz hautement toxiques et irritants.
- Ne pas souder des métaux munis d'un revêtement, tels que l'acier galvanisé, plaqué en plomb ou au cadmium à moins que le revêtement n'ait été enlevé dans la zone de soudure, que l'endroit soit bien ventilé, et en portant un respirateur à alimentation d'air. Les revêtements et tous les métaux renfermant ces éléments peuvent dégager des fumées toxiques en cas de soudage.

## LES RAYONS DE L'ARC peuvent provoquer des brûlures dans les yeux et sur la peau.

Le rayonnement de l'arc du procédé de soudage génèr des rayons visibles et invisibles intenses (ultraviolets e infrarouges) susceptibles de provoquer des brûlures dans les yeux et sur l peau. Des étincelles sont projetées pendant le soudage.

- Porter un casque de soudage approuvé muni de verres filtrants approprié pour protéger visage et yeux pour protéger votre visage et vos yeux pendant le soudage ou pour regarder (voir ANSI Z49.1 et Z87.1 énuméré dans les normes de sécurité).
- Porter des lunettes de sécurité avec écrans latéraux même sous votre casque.
- Avoir recours à des écrans protecteurs ou à des rideaux pour protéger les autres contre les rayonnements les éblouissements et les étincelles ; prévenir toute personne sur les lieux de ne pas regarder l'arc.
- Porter un équipement de protection pour le corps fait d'un matériau résistant et ignifuge (cuir, coton robuste, laine). La protection du corps comporte des vêtements sans huile comme par ex. des gants de cuir, une chemise solide, des pantalons sans revers, des chaussures hautes et une casquette.

## LE SOUDAGE peut provoquer un incendie ou une explosion.

Le soudage effectué sur des conteneurs fermés tels que des réservoirs, tambours ou des conduites peut provoquer leur éclatement. Des étincelles peuvent être projetées de l'arc de soudure. La projection d'étincelles, des pièces chaudes et des équipements chauds peut provoquer des incendies et des brûlures. Le contact accidentel de l'électrode avec des objets métalliques peut provoquer des étincelles, une explosion, un surchauffement ou un incendie. Avant de commencer le soudage, vérifier et s'assurer que l'endroit ne présente pas de danger.

- Déplacer toutes les substances inflammables à une distance de 10,7 m de l'arc de soudage. En cas d'impossibilité les recouvrir soigneusement avec des protections homologués.
- Ne pas souder dans un endroit là où des étincelles peuvent tomber sur des substances inflammables.
- Se protéger et d'autres personnes de la projection d'étincelles et de métal chaud.
- Des étincelles et des matériaux chauds du soudage peuvent facilement passer dans d'autres zones en traversant de petites fissures et des ouvertures.
- Surveiller tout déclenchement d'incendie et tenir un extincteur à proximité.
- Le soudage effectué sur un plafond, plancher, paroi ou séparation peut déclencher un incendie de l'autre côté.
- Ne pas couper ou souder des jantes ou des roues. Les pneus peuvent exploser s'ils sont chauffés. Les jantes et les roues réparées peuvent défaillir. Voir OSHA 29 CFR 1910.177 énuméré dans les normes de sécurité.
- Ne pas effectuer le soudage sur des conteneurs fermés tels que des réservoirs, tambours, ou conduites, à moins qu'ils n'aient été préparés correctement conformément à AWS F4.1 et AWS A6.0 (voir les Normes de Sécurité).
- Ne pas souder là où l'air ambiant pourrait contenir des poussières, gaz ou émanations inflammables (vapeur d'essence, par exemple).
- Brancher le câble de masse sur la pièce le plus près possible de la zone de soudage pour éviter le transport du courant sur une longue distance par des chemins inconnus éventuels en provoquant des risques d'électrocution, d'étincelles et d'incendie.
- Ne pas utiliser le poste de soudage pour dégeler des conduites gelées.
- En cas de non utilisation, enlever la baguette d'électrode du porte-électrode ou couper le fil à la pointe de contact.
- Porter un équipement de protection pour le corps fait d'un matériau résistant et ignifuge (cuir, coton robuste, laine). La protection du corps comporte des vêtements sans huile comme par ex. des gants de cuir, une chemise solide, des pantalons sans revers, des chaussures hautes et une casquette.
- Avant de souder, retirer toute substance combustible de vos poches telles qu'un allumeur au butane ou des allumettes.
- Une fois le travail achevé, assurez–vous qu'il ne reste aucune trace d'étincelles incandescentes ni de flammes.
- Utiliser exclusivement des fusibles ou coupe–circuits appropriés. Ne pas augmenter leur puissance; ne pas les ponter.
- Suivre les recommandations dans OSHA 1910.252(a)(2)(iv) et NFPA 51B pour les travaux à chaud et avoir de la surveillance et un extincteur à proximité.
- Lire et comprendre les fiches de données de sécurité et les instructions du fabricant concernant les adhésifs, les revêtements, les nettoyants, les consommables, les produits de refroidissement, les dégraisseurs, les flux et les métaux.

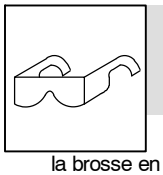

## DES PIECES DE METAL ou DES SALETES peuvent provoquer des blessures dans les yeux.

- Le soudage, l'écaillement, le passage de la pièce à la brosse en fil de fer, et le meulage génèrent des étincelles et des particules métalliques volantes. Pendant la période de refroidissement des soudures, elles risquent de projeter du laitier.
- Porter des lunettes de sécurité avec écrans latéraux ou un écran facial.

## LES ACCUMULATIONS DE GAZ risquent de provoquer des blessures ou même la mort.

- Fermer l'alimentation du gaz comprimé en cas de non utilisation.
- Veiller toujours à bien aérer les espaces confinés ou se servir d'un respirateur d'adduction d'air homologué.

**Les CHAMPS ÉLECTROMAGNÉTIQUES (CEM) peuvent affecter les implants médicaux.**

- Les porteurs de stimulateurs cardiaques et autres implants médicaux doivent rester à distance.

- Les porteurs d'implants médicaux doivent consulter leur médecin et le fabricant du dispositif avant de s'approcher de la zone où se déroule du soudage à l'arc, du soudage par points, du gougeage, de la découpe plasma ou une opération de chauffage par induction.

**LE BRUIT peut endommager l'ouïe.**

Le bruit des processus et des équipements peut affecter l'ouïe.

- Porter des protections approuvées pour les oreilles si le niveau sonore est trop élevé.

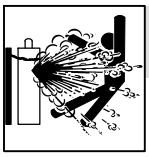

**LES BOUTEILLES peuvent exploser si elles sont endommagées.**

Les bouteilles de gaz comprimé contiennent du gaz sous haute pression. Si une bouteille est endommagée, elle peut exploser. Du fait que les bouteilles de gaz font normalement partie du procédé de soudage, les manipuler avec précaution.

- Protéger les bouteilles de gaz comprimé d'une chaleur excessive, des chocs mécaniques, des dommages physiques, du laitier, des flammes ouvertes, des étincelles et des arcs.
- Placer les bouteilles debout en les fixant dans un support stationnaire ou dans un porte-bouteilles pour les empêcher de tomber ou de se renverser.
- Tenir les bouteilles éloignées des circuits de soudage ou autres circuits électriques.
- Ne jamais placer une torche de soudage sur une bouteille à gaz.
- Une électrode de soudage ne doit jamais entrer en contact avec une bouteille.
- Ne jamais souder une bouteille pressurisée – risque d'explosion.
- Utiliser seulement des bouteilles de gaz comprimé, régulateurs, tuyaux et raccords convenables pour cette application spécifique; les maintenir ainsi que les éléments associés en bon état.
- Tourner le dos à la sortie de vanne lors de l'ouverture de la vanne de la bouteille. Ne pas se tenir devant ou derrière le régulateur lors de l'ouverture de la vanne.
- Le couvercle du détendeur doit toujours être en place, sauf lorsque la bouteille est utilisée ou qu'elle est reliée pour usage ultérieur.
- Utilisez les équipements corrects, les bonnes procédures et suffisamment de personnes pour soulever, déplacer et transporter les bouteilles.
- Lire et suivre les instructions sur les bouteilles de gaz comprimé, l'équipement connexe et le dépliant P-1 de la CGA (Compressed Gas Association) mentionné dans les principales normes de sécurité.

## 2-3. Dangers supplémentaires en relation avec l'installation, le fonctionnement et la maintenance

**Risque D'INCENDIE OU D'EXPLOSION.**

- Ne pas placer l'appareil sur, au-dessus ou à proximité de surfaces inflammables.
- Ne pas installer l'appareil à proximité de produits inflammables.

- Ne pas surcharger l'installation électrique – s'assurer que l'alimentation est correctement dimensionnée et protégée avant de mettre l'appareil en service.

**LA CHUTE DE L'ÉQUIPEMENT peut provoquer des blessures.**

- Utiliser l'anneau de levage uniquement pour soulever l'appareil, NON PAS les chariots, les bouteilles de gaz ou tout autre accessoire.

- Utilisez les procédures correctes et des équipements d'une capacité appropriée pour soulever et supporter l'appareil.
- En utilisant des fourches de levage pour déplacer l'unité, s'assurer que les fourches sont suffisamment longues pour dépasser du côté opposé de l'appareil.
- Tenir l'équipement (câbles et cordons) à distance des véhicules mobiles lors de toute opération en hauteur.
- Suivre les consignes du Manuel des applications pour l'équation de levage NIOSH révisée (Publication Nº94–110) lors du levage manuelle de pièces ou équipements lourds.

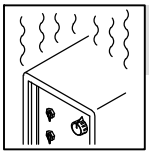

**L'EMPLOI EXCESSIF peut SURCHAUFFER L'ÉQUIPEMENT.**

- Prévoir une période de refroidissement ; respecter le cycle opératoire nominal.
- Réduire le courant ou le facteur de marche avant de poursuivre le soudage.

- Ne pas obstruer les passages d'air du poste.

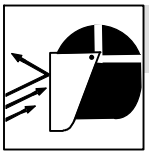

**LES ÉTINCELLES PROJETÉES peuvent provoquer des blessures.**

- Porter un écran facial pour protéger le visage et les yeux.
- Affûter l'électrode au tungstène uniquement à la meuleuse dotée de protecteurs. Cette manœuvre est à exécuter dans un endroit sûr lorsque l'on porte l'équipement homologué de protection du visage, des mains et du corps.

- Les étincelles risquent de causer un incendie – éloigner toute substance inflammable.

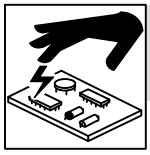

**LES CHARGES ÉLECTROSTATIQUES peuvent endommager les circuits imprimés.**

- Établir la connexion avec la barrette de terre avant de manipuler des cartes ou des pièces.

- Utiliser des pochettes et des boîtes antistatiques pour stocker, déplacer ou expédier des cartes de circuits imprimes.

**Les PIÈCES MOBILES peuvent causer des blessures.**

- Ne pas s'approcher des organes mobiles.
- Ne pas s'approcher des points de coincement tels que des rouleaux de commande.

**LES FILS DE SOUDAGE peuvent provoquer des blessures.**

- Ne pas appuyer sur la gâchette avant d'en avoir reçu l'instruction.
- Ne pas diriger le pistolet vers soi, d'autres personnes ou toute pièce mécanique en engageant le fil de soudage.

**L'EXPLOSION DE LA BATTERIE peut provoquer des blessures.**

- Ne pas utiliser l'appareil de soudage pour charger des batteries ou faire démarrer des véhicules à l'aide de câbles de démarrage, sauf si l'appareil dispose d'une fonctionnalité de charge de batterie destinée à cet usage.

**Les PIÈCES MOBILES peuvent causer des blessures.**

- S'abstenir de toucher des organes mobiles tels que des ventilateurs.
- Maintenir fermés et verrouillés les portes, panneaux, recouvrements et dispositifs de protection.

- Lorsque cela est nécessaire pour des travaux d'entretien et de dépannage, faire retirer les portes, panneaux, recouvrements ou dispositifs de protection uniquement par du personnel qualifié.
- Remettre les portes, panneaux, recouvrements ou dispositifs de protection quand l'entretien est terminé et avant de rebrancher l'alimentation électrique.

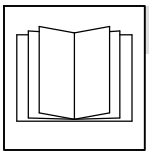

### LIRE LES INSTRUCTIONS.

- Lire et appliquer les instructions sur les étiquettes et le Mode d'emploi avant l'installation, l'utilisation ou l'entretien de l'appareil. Lire les informations de sécurité au début du manuel et dans chaque section.
- N'utiliser que les pièces de rechange recommandées par le constructeur.
- Effectuer l'installation, l'entretien et toute intervention selon les manuels d'utilisateurs, les normes nationales, provinciales et de l'industrie, ainsi que les codes municipaux.

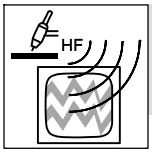


### LE RAYONNEMENT HAUTE FRÉQUENCE (H.F.) risque de provoquer des interférences.

- Le rayonnement haute fréquence (H.F.) peut provoquer des interférences avec les équipements de radio−navigation et de communication, les services de sécurité et les ordinateurs.
- Demander seulement à des personnes qualifiées familiarisées avec des équipements électroniques de faire fonctionner l'installation.
- L'utilisateur est tenu de faire corriger rapidement par un électricien qualifié les interférences résultant de l'installation.
- Si le FCC signale des interférences, arrêter immédiatement l'appareil.
- Effectuer régulièrement le contrôle et l'entretien de l'installation.
- Maintenir soigneusement fermés les portes et les panneaux des sources de haute fréquence, maintenir les éclateurs à une distance correcte et utiliser une terre et un blindage pour réduire les interférences éventuelles.

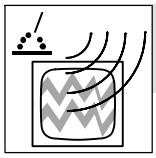

### LE SOUDAGE À L'ARC risque de provoquer des interférences.

- L'énergie électromagnétique risque de provoquer des interférences pour l'équipement électronique sensible tel que les ordinateurs et l'équipement commandé par ordinateur tel que les robots.
- Veiller à ce que tout l'équipement de la zone de soudage soit compatible électromagnétiquement.
- Pour réduire la possibilité d'interférence, maintenir les câbles de soudage aussi courts que possible, les grouper, et les poser aussi bas que possible (ex. par terre).
- Veiller à souder à une distance de 100 mètres de tout équipement électronique sensible.
- Veiller à ce que ce poste de soudage soit posé et mis à la terre conformément à ce mode d'emploi.
- En cas d'interférences après avoir pris les mesures précédentes, il incombe à l'utilisateur de prendre des mesures supplémentaires telles que le déplacement du poste, l'utilisation de câbles blindés, l'utilisation de filtres de ligne ou la pose de protecteurs dans la zone de travail.

## 2-4. Proposition californienne 65 Avertissements

**AVERTISSEMENT : ce produit peut vous exposer à des produits chimiques tels que le plomb, reconnus par l'État de Californie comme cancérigènes et sources de malformations ou d'autres troubles de la reproduction.**

**Pour plus d'informations, consulter www.P65Warnings.ca.gov.**

## 2-5. Principales normes de sécurité

*Safety in Welding, Cutting, and Allied Processes,* American Welding Society standard ANSI Standard Z49.1. Website: www.aws.org.

*Safe Practice For Occupational And Educational Eye And Face Protection,* ANSI Standard Z87.1 from American National Standards Institute. Website: www.ansi.org.

*Safe Practices for the Preparation of Containers and Piping for Welding and Cutting,* American Welding Society Standard AWS F4.1 from Global Engineering Documents. Website: www.global.ihs.com.

*Safe Practices for Welding and Cutting Containers that have Held Combustibles,* American Welding Society Standard AWS A6.0 from Global Engineering Documents. Website: www.global.ihs.com.

*National Electrical Code,* NFPA Standard 70 from National Fire Protection Association. Website: www.nfpa.org and www. sparky.org.

*Safe Handling of Compressed Gases in Cylinders,* CGA Pamphlet P-1 from Compressed Gas Association. Website:www.cganet.com.

*Safety in Welding, Cutting, and Allied Processes,* CSA Standard W117.2 from Canadian Standards Association. Website: www.csagroup.org.

*Standard for Fire Prevention During Welding, Cutting, and Other Hot Work,* NFPA Standard 51B from National Fire Protection Association. Website: www.nfpa.org.

OSHA *Occupational Safety and Health Standards for General Industry*, Title 29, Code of Federal Regulations (CFR), Part 1910.177 Subpart N, Part 1910 Subpart Q, and Part 1926, Subpart J. Website: www.osha.gov.

OSHA *Important Note Regarding the ACGIH TLV, Policy Statement on the Uses of TLVs and BEIs.* Website: www.osha.gov.

*Applications Manual for the Revised NIOSH Lifting Equation* from the National Institute for Occupational Safety and Health (NIOSH). Website: www.cdc.gov/NIOSH.

## 2-6. Informations relatives aux CEM

Le courant électrique qui traverse tout conducteur génère des champs électromagnétiques (CEM) à certains endroits. Le courant issu d'un soudage à l'arc (et de procédés connexes, y compris le soudage par points, le gougeage, le découpage plasma et les opérations de chauffage par induction) crée un champ électromagnétique (CEM) autour du circuit de soudage. Les champs électromagnétiques produits peuvent causer interférence à certains implants médicaux, p. ex. les stimulateurs cardiaques. Des mesures de protection pour les porteurs d'implants médicaux doivent être prises: Limiter par exemple tout accès aux passants ou procéder à une évaluation des risques individuels pour les soudeurs. Tous les soudeurs doivent appliquer les procédures suivantes pour minimiser l'exposition aux CEM provenant du circuit de soudage:

1. Rassembler les câbles en les torsadant ou en les attachant avec du ruban adhésif ou avec une housse.
2. Ne pas se tenir au milieu des câbles de soudage. Disposer les câbles d'un côté et à distance de l'opérateur.
3. Ne pas courber et ne pas entourer les câbles autour de votre corps.
4. Maintenir la tête et le torse aussi loin que possible du matériel du circuit de soudage.
5. Connecter la pince sur la pièce aussi près que possible de la soudure.
6. Ne pas travailler à proximité d'une source de soudage, ni s'asseoir ou se pencher dessus.
7. Ne pas souder tout en portant la source de soudage ou le dévidoir.

**En ce qui concerne les implants médicaux :**
Les porteurs d'implants doivent d'abord consulter leur médecin avant de s'approcher des opérations de soudage à l'arc, de soudage par points, de gougeage, du coupage plasma ou de chauffage par induction. Si le médecin approuve, il est recommandé de suivre les procédures précédentes.

# SECTION 3 – DEFINITIONS

## 3-1. Additional Safety Symbols And Definitions

☞ *Some symbols are found only on CE products.*

| | |
|---|---|
| | Warning! Watch Out! There are possible hazards as shown by the symbols.<br>Safe1 2012–05 |
| | Wear dry insulating gloves. Do not touch electrode with bare hand. Do not wear wet or damaged gloves.<br>Safe2 2017–04 |
| 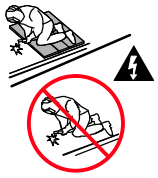 | Protect yourself from electric shock by insulating yourself from work and ground.<br>Safe3 2017–04 |
| 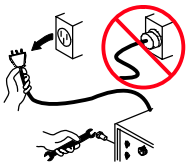 | Disconnect input plug or power before working on machine.<br>Safe5 2017–04 |
| | Keep your head out of the fumes.<br>Safe6 2017–04 |
| 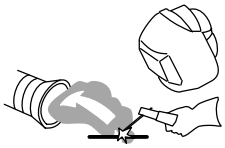 | Use forced ventilation or local exhaust to remove the fumes.<br>Safe8 2012–05 |
| 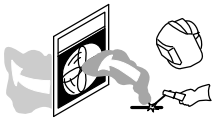 | Use ventilating fan to remove fumes.<br>Safe10 2012–05 |
| 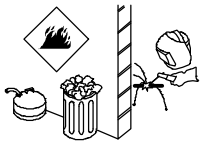 | Keep flammables away from welding. Do not weld near flammables.<br>Safe12 2012–05 |
| | Welding sparks can cause fires. Have a fire extinguisher nearby, and have a watchperson ready to use it.<br>Safe14 2012–05 |
| | Do not weld on drums or any closed containers.<br>Safe16 2017–04 |

| | |
|---|---|
| | Do not remove or paint over (cover) the label.<br>Safe20 2017–04 |
| | Do not discard product (where applicable) with general waste.<br>Reuse or recycle Waste Electrical and Electronic Equipment (WEEE) by disposing at a designated collection facility.<br>Contact your local recycling office or your local distributor for further information.<br>Safe37 2017–04 |
| | Environmental Protection Use Period (China)<br>Safe123 2016–06 |
| 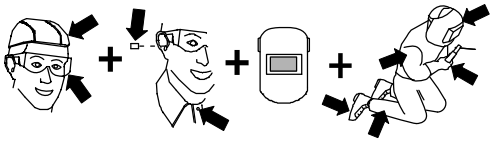 | Wear hat and safety glasses. Use ear protection and button shirt collar. Use welding helmet with correct shade of filter. Wear complete body protection.<br>Safe38 2012–05 |
| 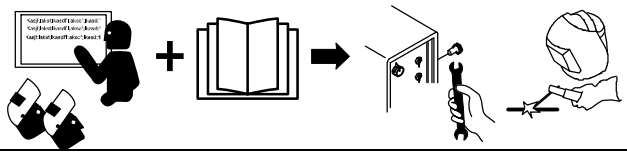 | Become trained and read the instructions before working on the machine or welding.<br>Safe40 2012–05 |

## 3-2. Miscellaneous Symbols And Definitions

☞ *Some symbols are found only on CE products.*

| | | | | | |
|---|---|---|---|---|---|
| A | Amperage | | Remote | | Gas (Supply) |
| | Panel–Local | | Temperature | | Gas Output |
| | Gas Tungsten Arc Welding (GTAW) | | Protective Earth (Ground) | | Gas Input |
| | Shielded Metal Arc Welding (SMAW) | | Alternating Current | | Increase/ Decrease Of Quantity |
| V | Volts | HF | High Frequency - Start | I | On |
| | Do Not Switch While Welding | | Water Input | O | Off |
| | Arc Force (DIG) | $t_2$ | Postflow Timer | % | Percent |
| % A | Background Amps | $t_1$ | Preflow Timer | | Direct Current |
| | Output | HF | High Frequency - Continuous | + − | Balance Control |
| | Circuit Breaker | | Water Outputs | + − | Maximum Cleaning |

| | |
|---|---|
| | Minimum Cleaning |
| + | Electrode Positive |
| − | Electrode Negative |
| t | Final Slope |
| | Meter |
| 1 ∿ | Single-Phase |
| $U_0$ | Rated No Load Voltage (OCV) |
| $U_1$ | Primary Voltage |
| $U_2$ | Conventional Load Voltage |
| | Line Connection |
| $I_1$ | Primary Current |
| $I_2$ | Rated Welding Current |

| | |
|---|---|
| $I_{1eff}$ | Maximum Effective Supply Current |
| $I_{1max}$ | Rated Maximum Supply Current |
| Hz | Hertz |
| | Electrode |
| | Work |
| | Thickness Gauge |
| | Spark Gap |
| S | Seconds |
| X | Duty Cycle |
| ~ ~ | Single-Phase Combined AC/DC Power Source |
| IP | Degree Of Protection |

| | |
|---|---|
| A | Final Amperage |
| t | Initial Time |
| A | Initial Amperage |
| % t | Pulse Percent On Time |
| ●●●● t | Spot Time |
| | Lift-Arc (GTAW) |
| 4T | 4 Step Trigger Operation Sequence |
| | Trigger Hold |
| | Pulser On-Off |
| f | Pulse Frequency |
| V | Input |
| Up | Rated peak starting voltage |

# Notes

# Notes

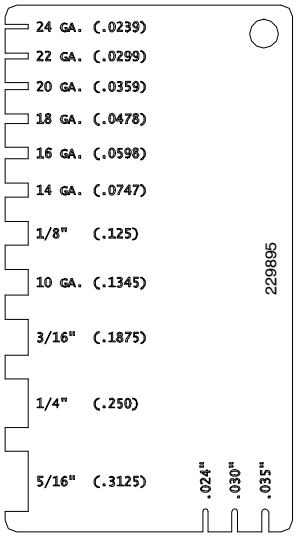


**MATERIAL THICKNESS GAUGE**

# SECTION 4 – SPECIFICATIONS

## 4-1. Serial Number And Rating Label Location

The serial number and rating information for the power source is located on the front of the machine. Use the rating labels to determine input power requirements and/or rated output. For future reference, write serial number in space provided on back cover of this manual.

## 4-2. Software Licensing Agreement

The End User License Agreement and any third-party notices and terms and conditions pertaining to third-party software can be found at https://www.millerwelds.com/eula and are incorporated by reference herein.

## 4-3. Information About Default Weld Parameters And Settings

***NOTICE*** *– Each welding application is unique. Although certain Miller Electric products are designed to determine and default to certain typical welding parameters and settings based upon specific and relatively limited application variables input by the end user, such default settings are for reference purposes only; and final weld results can be affected by other variables and application-specific circumstances. The appropriateness of all parameters and settings should be evaluated and modified by the end user as necessary based upon application-specific requirements. The end user is solely responsible for selection and coordination of appropriate equipment, adoption or adjustment of default weld parameters and settings, and ultimate quality and durability of all resultant welds. Miller Electric expressly disclaims any and all implied warranties including any implied warranty of fitness for a particular purpose.*

## 4-4. Cooler Specifications

☞ *The correction factor on the cooling power at an ambient temperature of 104 °F (40 °C) is 0.625.*

| | |
|---|---|
| Use With Torches Rated Up To 400 Amperes | |
| Coolant Flow Rate 1 liter per minute (1.1 quart) | |
| Coolant Tank Capacity | 3 gal (11.4 L) |

## 4-5. Coolant Specifications

⚠ **Do not use conductive coolant.**

| Application | Coolant |
|---|---|
| **GTAW Or Where High Frequency Current Is Used** | Low Conductivity Coolant 043810*<br>Distilled Or Deionized Water Okay Above 32°F (0°C) |
| **GMAW Or Where High Frequency Current Is Not Used** | Low Conductivity Coolant 043810*<br>Aluminum Protecting Coolant 043809*<br>Distilled Or Deionized Water Okay Above 32°F (0°C) |
| **Where Coolant Contacts Aluminum Parts** | Aluminum Protecting Coolant 043809* |
| *Coolants 043810 and 043809 protect to -37°F (-38°C) and resist algae growth. | |
| ***NOTICE*** *– Use of any coolant other than those listed in the table voids the warranty on any parts that come in contact with the coolant (pump, radiator, etc.).* | |

## 4-6. Welding Power Source Specifications

☞ *Do not use information in unit specifications table to determine electrical service requirements. See Sections 5-14, 5-15 and 5-16 for information on connecting input power.*

☞ *This equipment will deliver rated output at an ambient air temperature up to 104 °F (40 °C).*

### A. For 350 LX Models

| Rated Welding Output | PFC ** | Amperes Input at AC Balanced Rated Load Output, 50/60 Hz, Single-Phase | | | | | | | | KVA | KW | Amperage Range | Max OCV (Uo) | Rated Peak Starting Voltage (Up) |
|---|---|---|---|---|---|---|---|---|---|---|---|---|---|---|
| | | 200V | 220V | 230V | 400V | 440V | 460V | 520V | 575V | | | | | |
| NEMA Class I (60) – 300 Amperes, 32 Volts AC, 60% Duty Cycle | No PFC | 125<br>3.3* | 103<br>2.2* | 110<br>2.0* | 57<br>1.5* | 52<br>1.2* | 55<br>1.7* | 43<br>1.0* | 42<br>1.1* | 25.0<br>0.9* | 10.6<br>0.6* | 3 – 400A | 80V | 15 KV• |
| | With PFC | 92<br>77* | 77<br>67* | 78<br>69* | 40<br>36* | 39<br>33* | 38<br>34* | 33<br>28* | 31<br>27.2* | 18.0<br>16.6* | 10.5<br>0.6* | | | 15 KV• |
| NEMA Class II (40) – 350 Amperes, 34 Volts AC, 40% Duty Cycle | No PFC | 146<br>3.3* | 120<br>2.2* | 128<br>2.6* | 66<br>2.5* | 60<br>1.2* | 65<br>1.7* | 51<br>1.0* | 50<br>1.1* | 29.5<br>0.9* | 13.7<br>0.4* | 3 – 400A | 80V | 15 KV• |
| | With PFC | 114<br>77* | 95<br>67* | 94<br>69* | 49<br>36* | 47<br>33* | 47<br>34* | 40<br>28* | 38<br>27.2* | 21.7<br>16.6* | 13.3<br>0.6* | | | 15 KV• |

*While idling
**Power Factor Correction
•Arc striking device is designed for manual guided operations

## B. For 250 DX Models

| Rated Welding Output | PFC ** | Amperes Input at AC Balanced Rated Load Output, 60 Hz, Single-Phase | | | | KVA | KW | Amperage Range | Max OCV (Uo) | Rated Peak Starting Voltage (Up) |
|---|---|---|---|---|---|---|---|---|---|---|
| | | 200V | 230V | 460V | 575V | | | | | |
| NEMA Class I (40) – 200 Amperes, 28 Volts AC, 60% Duty Cycle | No PFC | 88 *3.3 | 77 *2.8 | 38 *1.5 | 31 *1.1 | 17.6 *.59 | 8.6 *.29 | 3 – 310A | 80V | 15 KV• |
| | With PFC | 60 *55.3 | 52 *49.5 | 26 *24.5 | 21 *19.6 | 12.06 *11.2 | 8.11 *.39 | 3 – 310A | 80V | 15 KV• |
| NEMA Class II (40) – 250 Amperes, 30 Volts AC, 40% Duty Cycle | No PFC | 110 *3.3 | 96 *2.8 | 48 *1.5 | 38 *1.1 | 21.98 *.59 | 11.76 *.29 | 3 – 310A | 80V | 15 KV• |
| | With PFC | 82 *55.3 | 71 *49.5 | 35 *24.5 | 28 *19.6 | 16.32 *11.2 | 11.81 *1.93 | 3 – 310A | 80V | 15 KV• |

*While idling
**Power Factor Correction
•Arc striking device is designed for manual guided operations

| Rated Welding Output | PFC ** | Amperes Input at AC Balanced Rated Load Output, 50/60 Hz, Single-Phase | | | | KVA | KW | Amperage Range | Max OCV (Uo) | Rated Peak Starting Voltage (Up) |
|---|---|---|---|---|---|---|---|---|---|---|
| | | 220V | 400V | 440V | 520V | | | | | |
| NEMA Class I (40) – 200 Amperes, 28 Volts AC, 60% Duty Cycle | No PFC | 82 *3.0 | 45 *1.6 | 41 *1.4 | 35 *1.2 | 17.6 *.59 | 8.6 *.29 | 3 – 310A | 80V | 15 KV• |
| | With PFC | 61 *45.9 | 34 *25.1 | 31 *22.8 | 26 *23.2 | 12.06 *11.2 | 8.11 *.39 | 3 – 310A | 80V | 15 KV• |
| NEMA Class II (40) – 250 Amperes, 30 Volts AC, 40% Duty Cycle | No PFC | 100 *3.0 | 55 *1.6 | 50 *1.4 | 42 *1.2 | 21.98 *.59 | 11.76 *.29 | 3 – 310A | 80V | 15 KV• |
| | With PFC | 81 *45.9 | 44 *25.1 | 40 *22.8 | 34 *23.2 | 16.32 *11.2 | 11.81 *1.93 | 3 – 310A | 80V | 15 KV• |

*While idling
**Power Factor Correction
•Arc striking device is designed for manual guided operations

| Rated Welding Output | PFC ** | Amperes Input at AC Balanced Rated Load Output, 50 Hz, Single-Phase | | | | KVA | KW | Amperage Range | Max OCV (Uo) | Rated Peak Starting Voltage (Up) |
|---|---|---|---|---|---|---|---|---|---|---|
| | | 200V | 230V | 460V | 575V | | | | | |
| NEMA Class I (40) – 175 Amperes, 27 Volts AC, 60% Duty Cycle | No PFC | 80 *3.3 | 69 *2.8 | 35 *1.5 | 28 *1.1 | 15.9 *.59 | 7.4 *.29 | 3 – 310A | 80V | 15 KV• |
| | With PFC | 52 *55.3 | 45 *49.5 | 22 *24.5 | 18 *19.6 | 10.3 *11.2 | 7.3 *.39 | 3 – 310A | 80V | 15 KV• |
| NEMA Class II (40) – 225 Amperes, 29 Volts AC, 40% Duty Cycle | No PFC | 101 *3.3 | 88 *2.8 | 44 *1.5 | 35 *1.1 | 20.2 *.59 | 10.2 *.29 | 3 – 310A | 80V | 15 KV• |
| | With PFC | 74 *55.3 | 64 *49.5 | 32 *24.5 | 26 *19.6 | 14.7 *11.2 | 10.1 *1.93 | 3 – 310A | 80V | 15 KV• |

*While idling
**Power Factor Correction
•Arc striking device is designed for manual guided operations

## 4-7. Duty Cycle And Overheating

### 250 DX Models

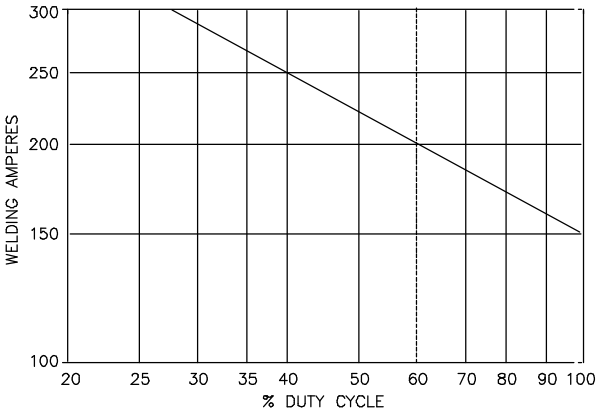


Duty Cycle is the percentage of 10 minutes that the unit can weld at rated load without overheating.

If unit overheats, output stops, front panel voltmeter/ammeter displays a HLP3 or HLP5 message (see Section 8-1), and cooling fans run. Wait fifteen minutes for unit to cool. Reduce amperage or duty cycle before welding.

***NOTICE*** *– Exceeding duty cycle can damage unit and void warranty.*

**40% Duty Cycle At 250 Amperes**

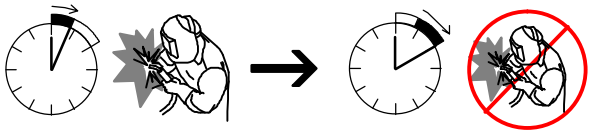

4 Minutes Welding — 6 Minutes Resting

**60% Duty Cycle At 200 Amperes**

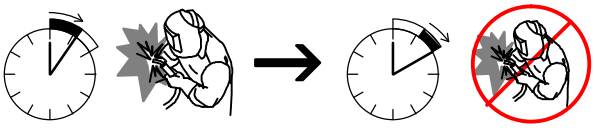

6 Minutes Welding — 4 Minutes Resting

**Overheating**

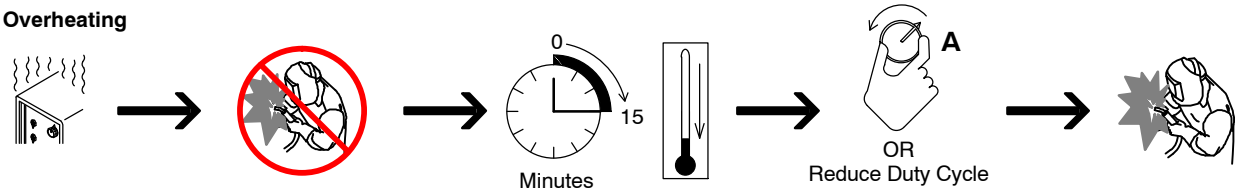


duty1 4/95 / Ref. 116198

### 350 LX Models

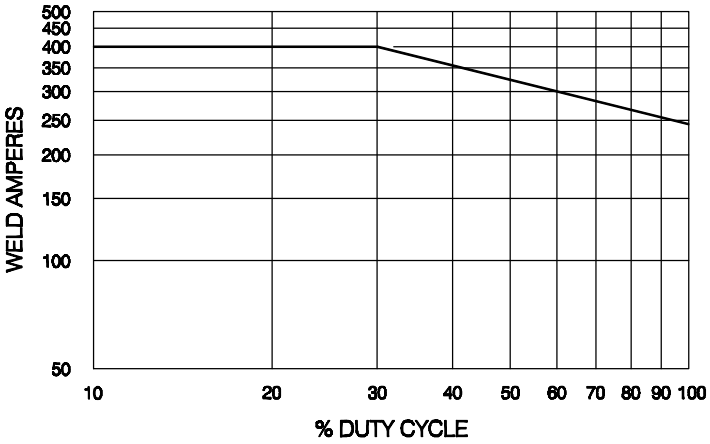


**40% Duty Cycle At 350 Amperes**

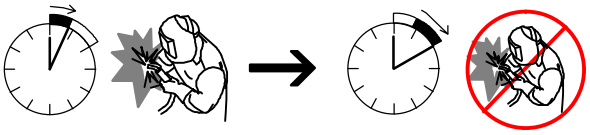

4 Minutes Welding — 6 Minutes Resting

**60% Duty Cycle At 300 Amperes**

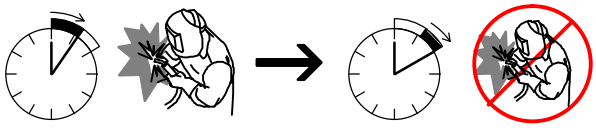

6 Minutes Welding — 4 Minutes Resting

**Overheating**

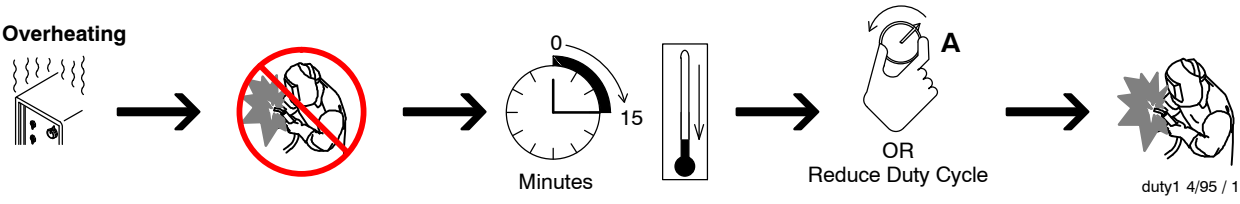


duty1 4/95 / 190276

# 4-8. Volt-Ampere Curves

## A. For 250 DX Models

The volt-ampere curves show the minimum and maximum voltage and amperage output capabilities of the welding power source. Curves of other settings fall between the curves shown.

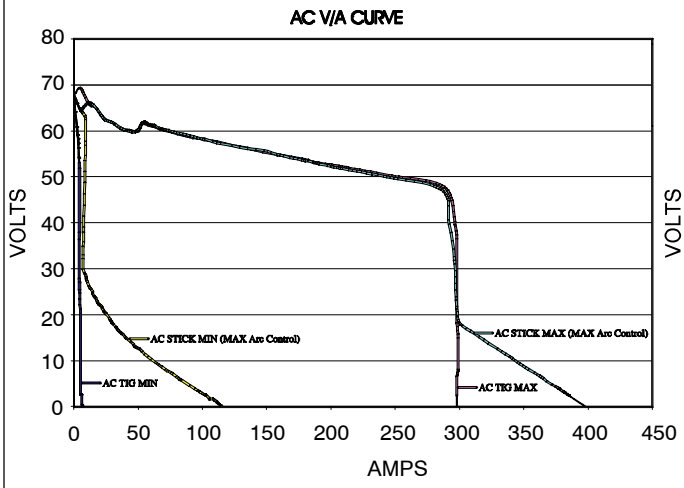


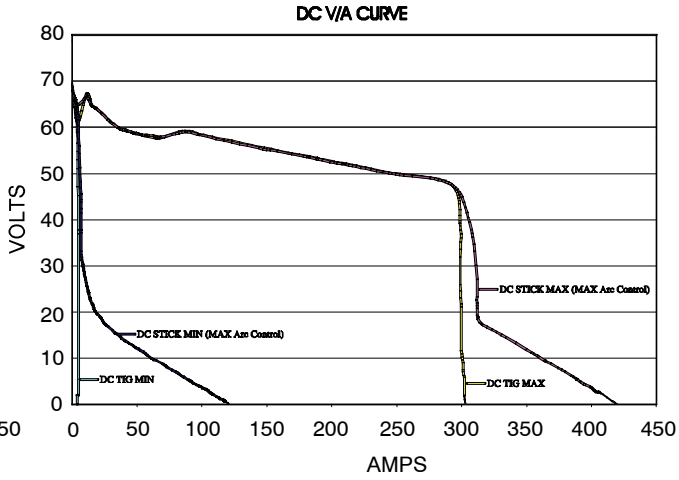


205631 / 205632

## B. For 350 LX Models

The volt-ampere curves show the minimum and maximum voltage and amperage output capabilities of the welding power source. Curves of other settings fall between the curves shown.

**350 Amperes Models**

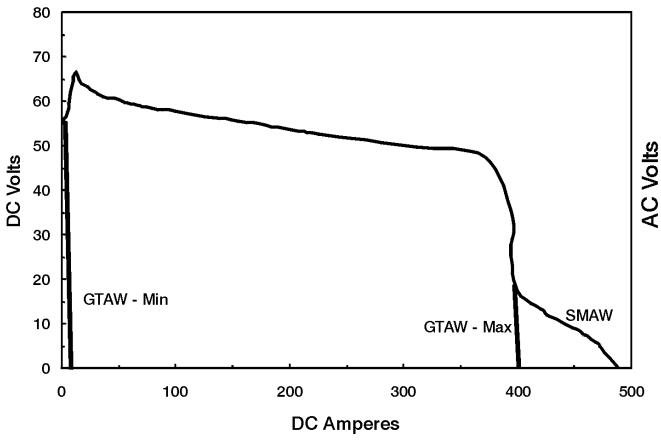


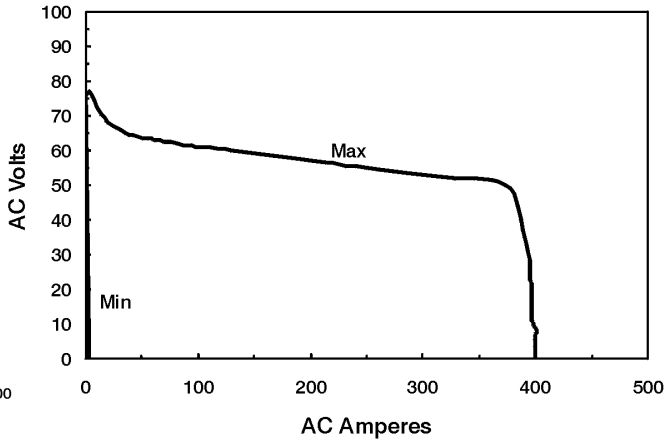


ssb1.1 10/91 – ST-190277 / ST-190278

## 4-9. Dimensions And Weights

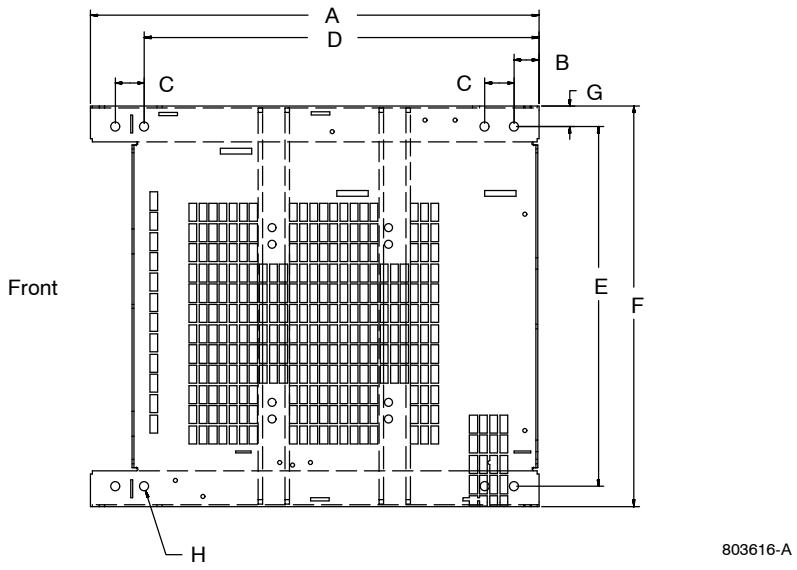


| Dimensions | |
|---|---|
| Height | 36-1/4 in. (921 mm) |
| Width | 23 in. (584 mm) |
| Length | 28 in. (711 mm) |
| A | 25 in. (635 mm) |
| B | 1-25/64 in. (35 mm) |
| C | 1-5/8 in. (41 mm) |
| D | 22 in. (559 mm) |
| E | 20 in. (508 mm) |
| F | 22-1/4 in. (565 mm) |
| G | 1-1/8 in. (29 mm) |
| H | 1/2 in. (13 mm) Dia |
| **Weight** | |
| 400 lbs (181 kg) For 250 DX Models | |
| 496 lbs (225 kg) For 350 LX Models | |

## 4-10. Environmental Specifications

### A. IP Rating

| IP Rating |
|---|
| IP23<br>This equipment is designed for outdoor use.<br>IP23 2017-02 |

### B. Temperature Specifications

| Operating Temperature Range* | Storage/Transportation Temperature Range |
|---|---|
| 14 to 104 °F (-10 to 40°C)<br>*Output is derated at temperatures above 104°F (40°C). | −4 to 131 °F (−20 to 55°C)<br>Temp_2016-07 |

### C. Information On Compliance With Essential Requirements

This equipment conforms to the essential requirements and provisions of the stated Standard(s):

- IEC 60974-1: 2005 Arc Welding Equipment – Welding Power Sources
- IEC 60974-10: 2004 Arc Welding Equipment – Electromagnetic Compatibility Requirements
- EN 50445 Product family standard to demonstrate compliance of equipment for resistance welding, arc welding and allied processes with the basic restrictions related to human exposure to electromagnetic fields (0 Hz – 300 Hz) BS EN 50445:2008

## D. China EEP Hazardous Substance Information

| 中国电器电子产品中有害物质的名称及含量<br>China EEP Hazardous Substance Information | | | | | | |
|---|---|---|---|---|---|---|
| 部件名称<br>Component Name<br>(如果适用)<br>(if applicable) | 有害物质<br>Hazardous Substance | | | | | |
| | 铅<br>Pb | 汞<br>Hg | 镉<br>Cd | 六价铬<br>Cr6 | 多溴联苯<br>PBB | 多溴二苯醚<br>PBDE |
| 黄铜和铜部件<br>Brass and Copper Parts | X | O | O | O | O | O |
| 耦合装置<br>Coupling Devices | X | O | O | O | O | O |
| 开关装置<br>Switching Devices | O | O | X | O | O | O |
| 线缆和线缆配件<br>Cable and Cable Accessories | X | O | O | O | O | O |
| 电池<br>Batteries | X | O | O | O | O | O |
| 本表格依据中国SJ/T 11364的规定编制.<br>This table is prepared in accordance with China SJ/T 11364. | | | | | | |
| O:<br>表示该有害物质在该部件所有均质材料中的含量均在中国GB/T26572规定的限量要求以下.<br>Indicates that the concentration of the Hazardous Substance in all homogeneous materials of the part is below the relevant threshold of China GB/T 26572. | | | | | | |
| X:<br>表示该有害物质至少在该部件的某一均质材料中的含量超出中国GB/T26572规定的限量要求.<br>Indicates that the concentration of the Hazardous Substance in at least one homogeneous material of the part is above the relevant threshold of China GB/T 26572. | | | | | | |
| 电器电子产品的环保使用期限依据中国SJ/Z11388的规定确定.<br>The EFUP value of this EEP is defined in accordance with China SJ/Z 11388.<br>EEP_2016-06 | | | | | | 25 |

# Notes

# SECTION 5 – INSTALLATION

## 5-1. Selecting A Location

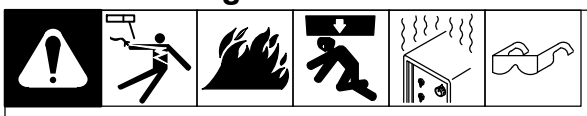

**Movement**

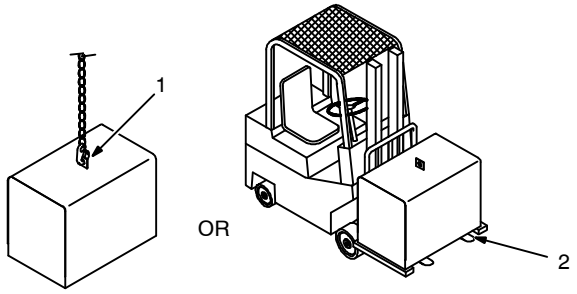


**Do not move or operate unit where it could tip.**

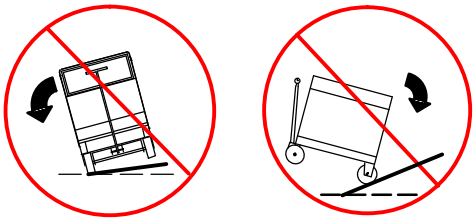

**Location And Airflow**

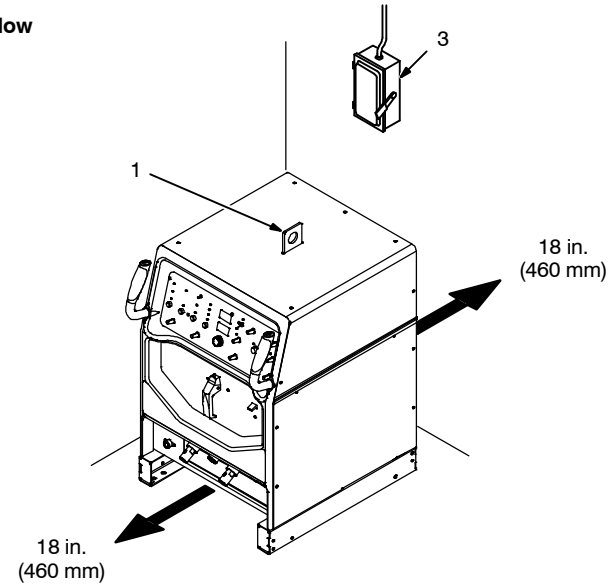


**Special installation may be required where gasoline or volatile liquids are present – see NEC Article 511 or CEC Section 20.**

1. Lifting Eye
2. Lifting Forks

Use lifting eye or lifting forks to move unit.

If using lifting forks, extend forks beyond opposite side of unit.

3. Line Disconnect Device

Locate unit near correct input power supply.

loc_large 2015-04 Ref. 117264-C / 803584-C

## 5-2. Selecting Cable Sizes*

***NOTICE*** *– The Total Cable Length in Weld Circuit (see table below) is the combined length of both weld cables. For example, if the power source is 100 ft (30 m) from the workpiece, the total cable length in the weld circuit is 200 ft (2 cables x 100 ft). Use the 200 ft (60 m) column to determine cable size.*

| Welding Amperes | Weld Cable Size** and Total Cable (Copper) Length in Weld Circuit Not Exceeding*** | | | | | | | |
|---|---|---|---|---|---|---|---|---|
| | 100 ft (30 m) or Less | | 150 ft (45 m) | 200 ft (60 m) | 250 ft (70 m) | 300 ft (90 m) | 350 ft (105 m) | 400 ft (120 m) |
| | 10 – 60% Duty Cycle AWG ($mm^2$) | 60 – 100% Duty Cycle AWG ($mm^2$) | 10 – 100% Duty Cycle AWG ($mm^2$) | | | | | |
| 100 | 4 (20) | 4 (20) | 4 (20) | 3 (30) | 2 (35) | 1 (50) | 1/0 (60) | 1/0 (60) |
| 150 | 3 (30) | 3 (30) | 2 (35) | 1 (50) | 1/0 (60) | 2/0 (70) | 3/0 (95) | 3/0 (95) |
| 200 | 3 (30) | 2 (35) | 1 (50) | 1/0 (60) | 2/0 (70) | 3/0 (95) | 4/0 (120) | 4/0 (120) |
| 250 | 2 (35) | 1 (50) | 1/0 (60) | 2/0 (70) | 3/0 (95) | 4/0 (120) | 2x2/0 (2x70) | 2x2/0 (2x70) |
| 300 | 1 (50) | 1/0 (60) | 2/0 (70) | 3/0 (95) | 4/0 (120) | 2x2/0 (2x70) | 2x3/0 (2x95) | 2x3/0 (2x95) |
| 350 | 1/0 (60) | 2/0 (70) | 3/0 (95) | 4/0 (120) | 2x2/0 (2x70) | 2x3/0 (2x95) | 2x3/0 (2x95) | 2x4/0 (2x120) |
| 400 | 1/0 (60) | 2/0 (70) | 3/0 (95) | 4/0 (120) | 2x2/0 (2x70) | 2x3/0 (2x95) | 2x4/0 (2x120) | 2x4/0 (2x120) |
| 500 | 2/0 (70) | 3/0 (95) | 4/0 (120) | 2x2/0 (2x70) | 2x3/0 (2x95) | 2x4/0 (2x120) | 3x3/0 (3x95) | 3x3/0 (3x95) |

* This chart is a general guideline and may not suit all applications. If cable overheats, use next size larger cable.

**Weld cable size (AWG) is based on either a 4 volts or less drop or a current density of at least 300 circular mils per ampere.
( ) = $mm^2$ for metric use.

***For distances longer than those shown in this guide, see AWS Fact Sheet No. 39, Welding Cables, available from the American Welding Society at http://www.aws.org.

Ref. S-0007-M 2017–08

## 5-3. Weld Output Terminals

1. Electrode Weld Output Terminal
2. Work Weld Output Terminal

See Sections 5-6, 5-7, 5-10, and 5-11 for weld output connections.

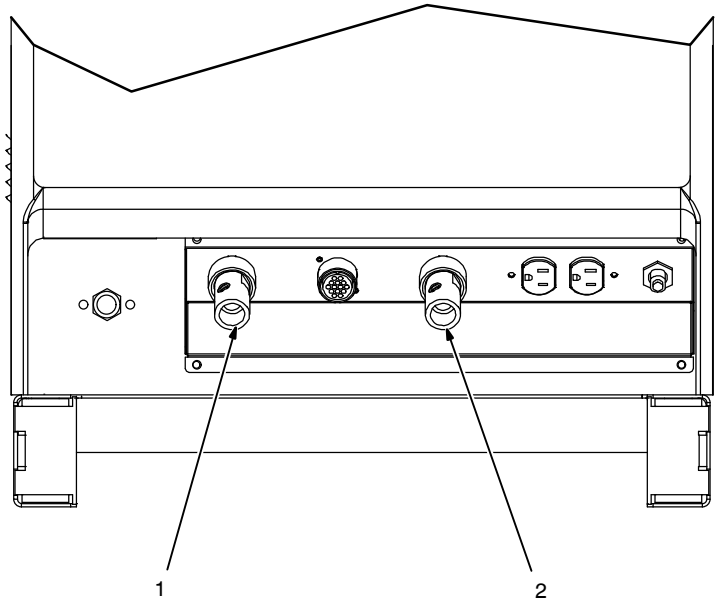


Ref. 803588-B

## 5-4. Remote 14 Receptacle Information

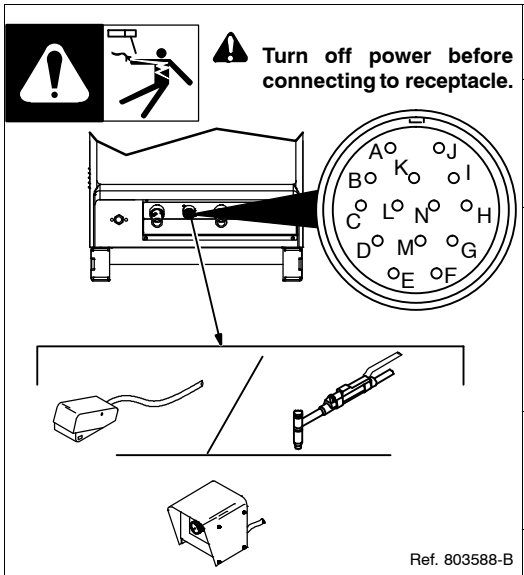


**Turn off power before connecting to receptacle.**

| REMOTE 14 | Socket* | Socket Information |
|---|---|---|
| 24 VOLTS DC OUTPUT CONTACTOR | A | Contactor control +15 volts DC. |
| | B | Contact closure to A completes +15 volts DC contactor control circuit and enables output. |
| A REMOTE OUTPUT CONTROL | C | Output to remote control; 0 to +10 volts DC output to remote control. |
| | D | Remote control/feedback circuit common. |
| | E | 0 to +10 volts DC input command signal from remote control. |
| A/V AMPERAGE VOLTAGE | F | Current feedback; +1 volt DC per 100 amperes. |
| | H | Voltage feedback; +1 volt DC per 10 volts output. |
| CHASSIS | K | Chassis common. |
| GND | G | Common for +15 volts DC socket A. |

*The remaining sockets are not used.

## 5-5. Shielding Gas Connections And 115 Volts AC Cooler Receptacle

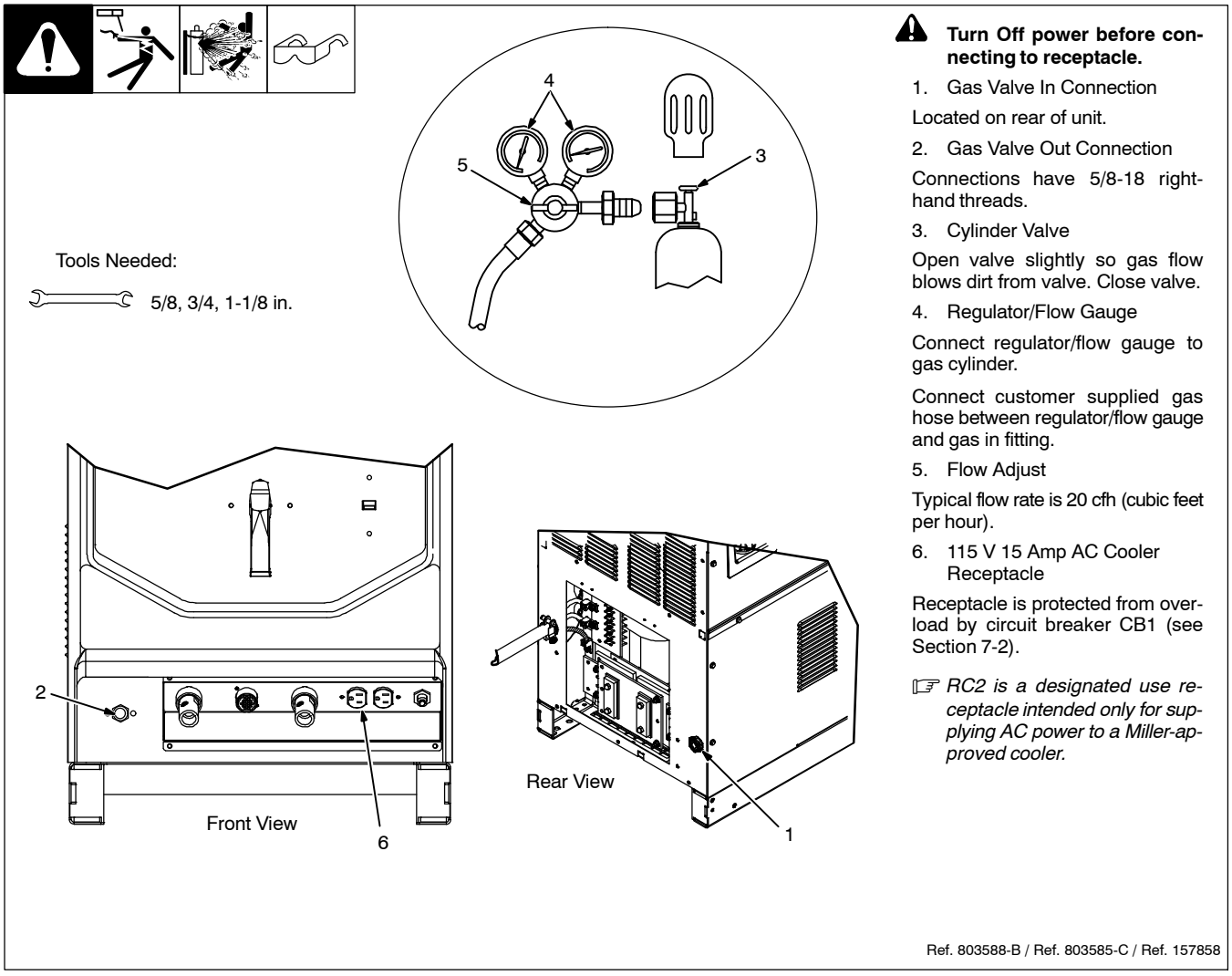


**Turn Off power before connecting to receptacle.**

1. Gas Valve In Connection

Located on rear of unit.

2. Gas Valve Out Connection

Connections have 5/8-18 right-hand threads.

3. Cylinder Valve

Open valve slightly so gas flow blows dirt from valve. Close valve.

4. Regulator/Flow Gauge

Connect regulator/flow gauge to gas cylinder.

Connect customer supplied gas hose between regulator/flow gauge and gas in fitting.

5. Flow Adjust

Typical flow rate is 20 cfh (cubic feet per hour).

6. 115 V 15 Amp AC Cooler Receptacle

Receptacle is protected from overload by circuit breaker CB1 (see Section 7-2).

☞ *RC2 is a designated use receptacle intended only for supplying AC power to a Miller-approved cooler.*

## 5-6. TIG Connections With A Two-Piece Air-Cooled Torch

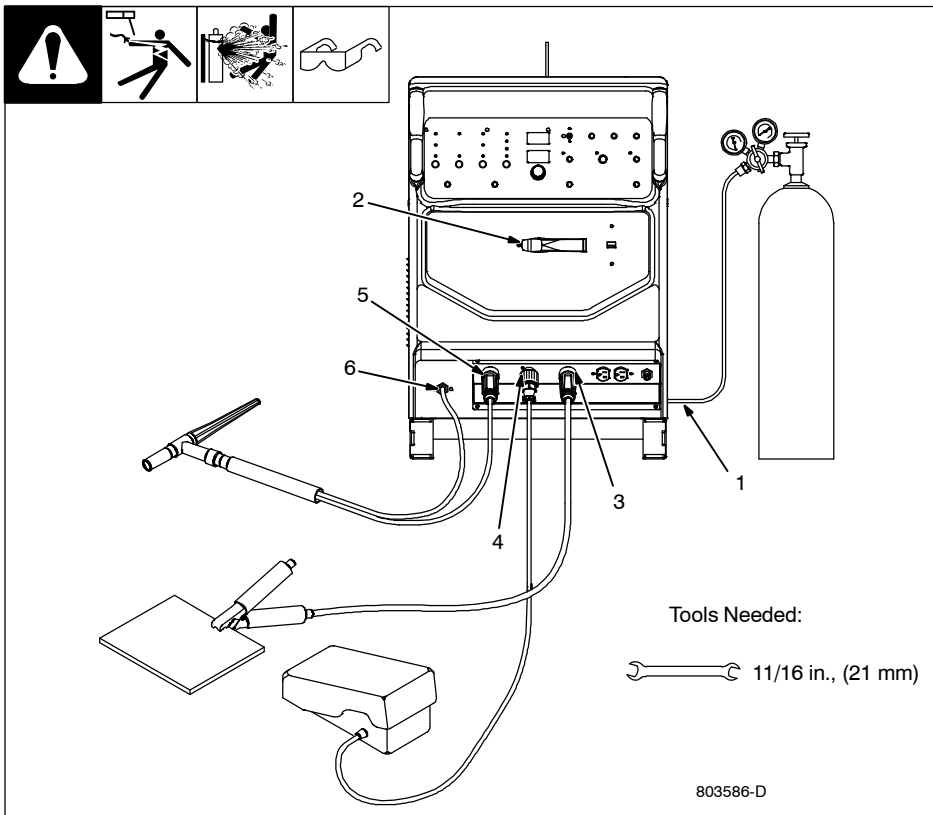


**Turn Off power before making connections.**

1. Gas-In Connection

Connect gas hose from gas supply to gas-in connection.

2. Output Selector Switch (See Section 6-2)

Switch is shown in DCEN (direct current electrode negative) position for TIG HF Impulse DCEN welding. For front panel control display, see Section 5-8. For TIG AC welding, place switch in AC position (see Section 6-2). For TIG AC front panel control display, see Section 5-9.

3. Work Weld Output Terminal

Connect work lead to work weld output terminal.

4. Remote 14 Receptacle

Connect desired remote control to Remote 14 receptacle (see Section 5-4).

5. Electrode Weld Output Terminal

Connect TIG torch to electrode weld output terminal.

6. Gas-Out Connection

Connect torch gas hose to gas-out fitting.

## 5-7. TIG Connections With A One-Piece Air-Cooled Torch

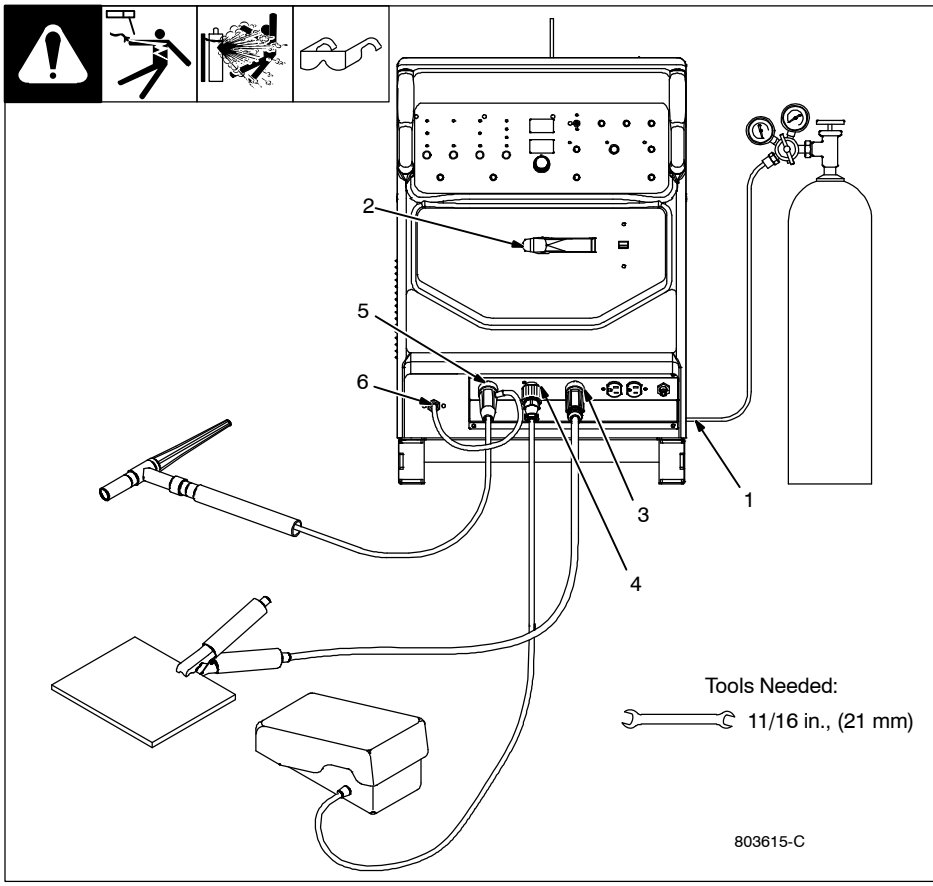


**Turn Off power before making connections.**

1. Gas-In Connection

Connect gas hose from gas supply to gas–in connection.

2. Output Selector Switch (See Section 6-2)

Switch is shown in DCEN (direct current electrode negative) position for TIG HF Impulse DCEN welding. For front panel control display, see Section 5-8. For TIG AC welding, place switch in AC position (see Section 6-2). For TIG AC front panel control display, see Section 5-9.

3. Work Weld Output Terminal

Connect work lead to work weld output terminal.

4. Remote 14 Receptacle

Connect desired remote control to Remote 14 receptacle (see Section 5-4).

5. Electrode Weld Output Terminal

Connect TIG torch to electrode weld output terminal.

6. Gas-Out Connection

Connect torch gas hose to gas-out fitting.

## 5-8. Front Panel Display For TIG HF Impulse DCEN (Direct Current Electrode Negative)

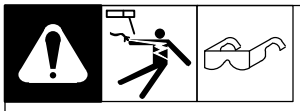

1. Front Panel

Correct front panel display for basic TIG HF Impulse DCEN welding.

☞ *For all front panel switch pad controls: press switch pad to turn on light and enable function.*

Green on nameplate indicates a TIG function (see Section 6-1 for description of controls).

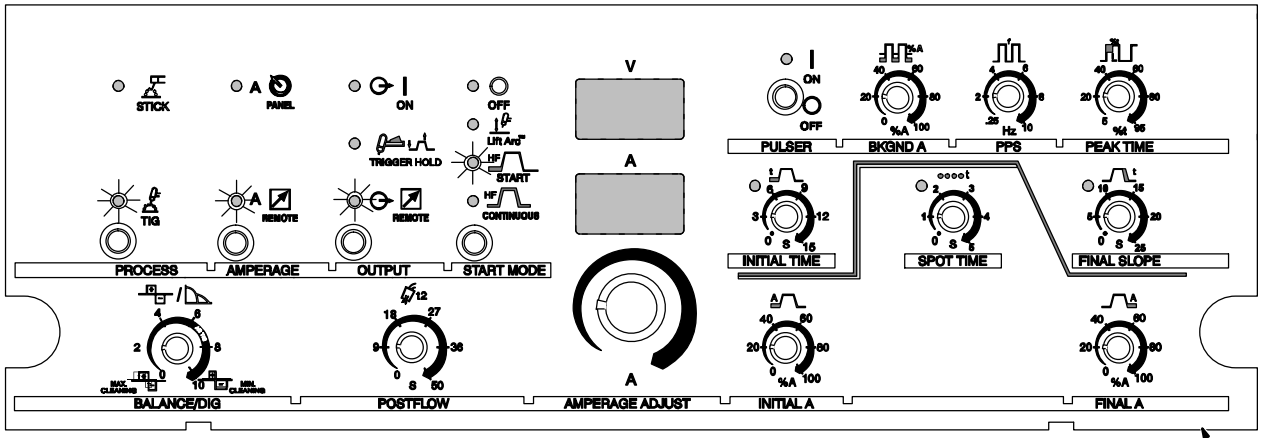


1

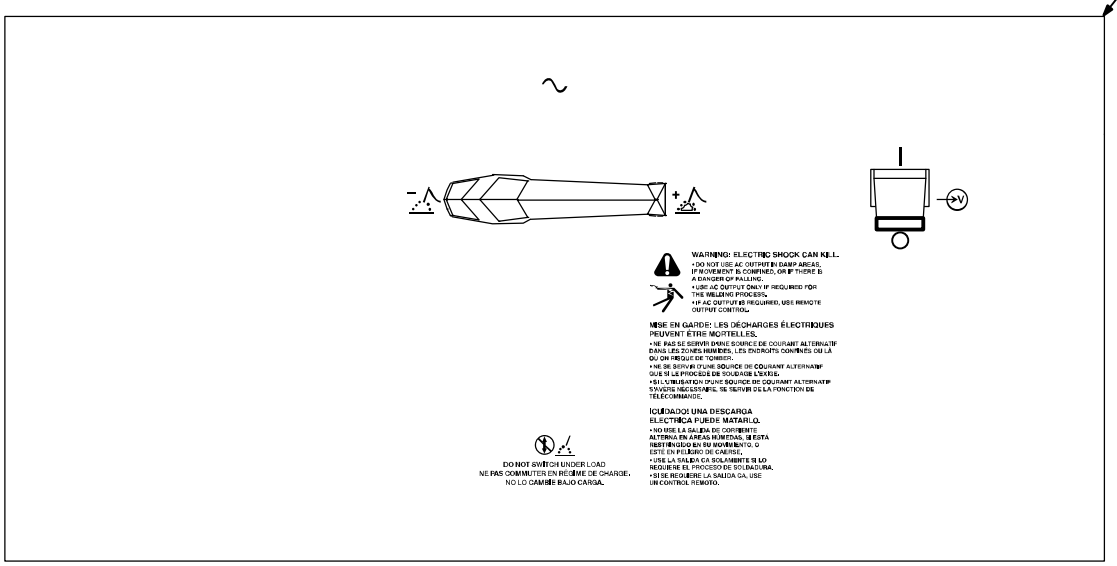


217264-G / Ref. 250526-C

## 5-9. Front Panel Display For TIG AC

1. Front Panel

Correct front panel display for basic TIG AC welding.

☞ *For all front panel switch pad controls: press switch pad to turn on light and enable function.*

Green on nameplate indicates a TIG function (see Section 6-1 for description of controls).

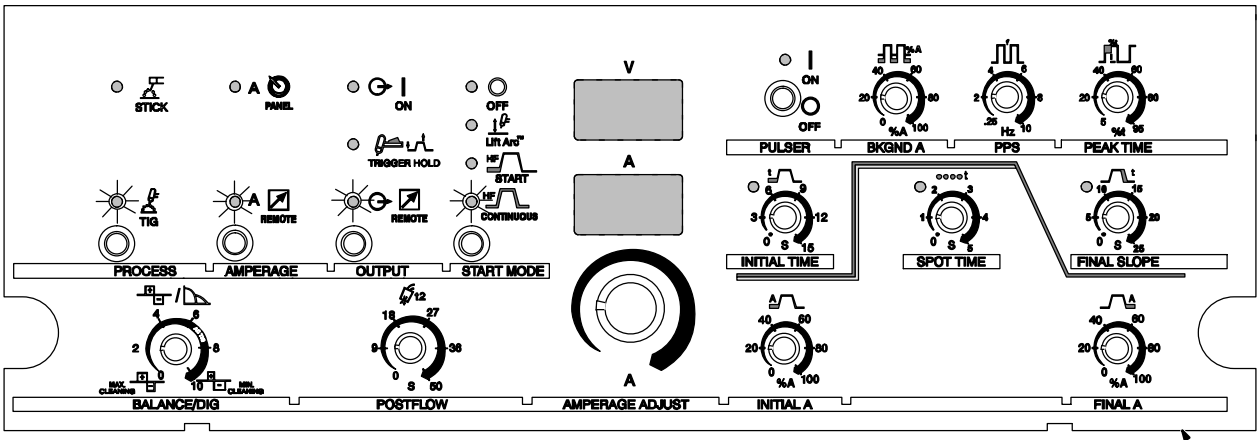


1

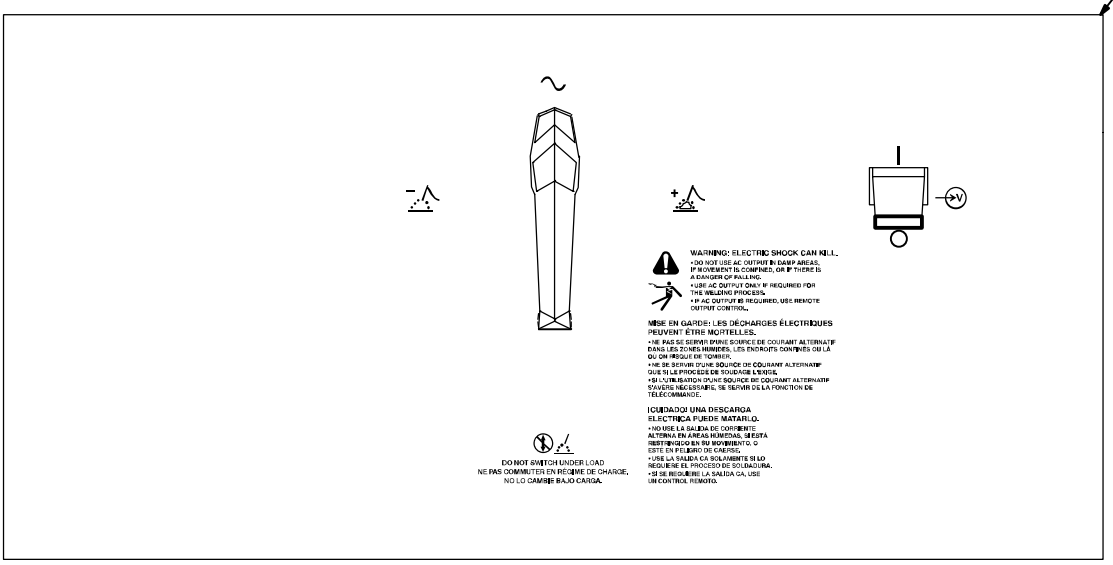


217264-G / Ref. 250526-C

## 5-10. Optional Cooler Connections

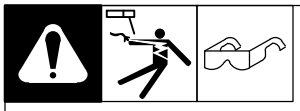

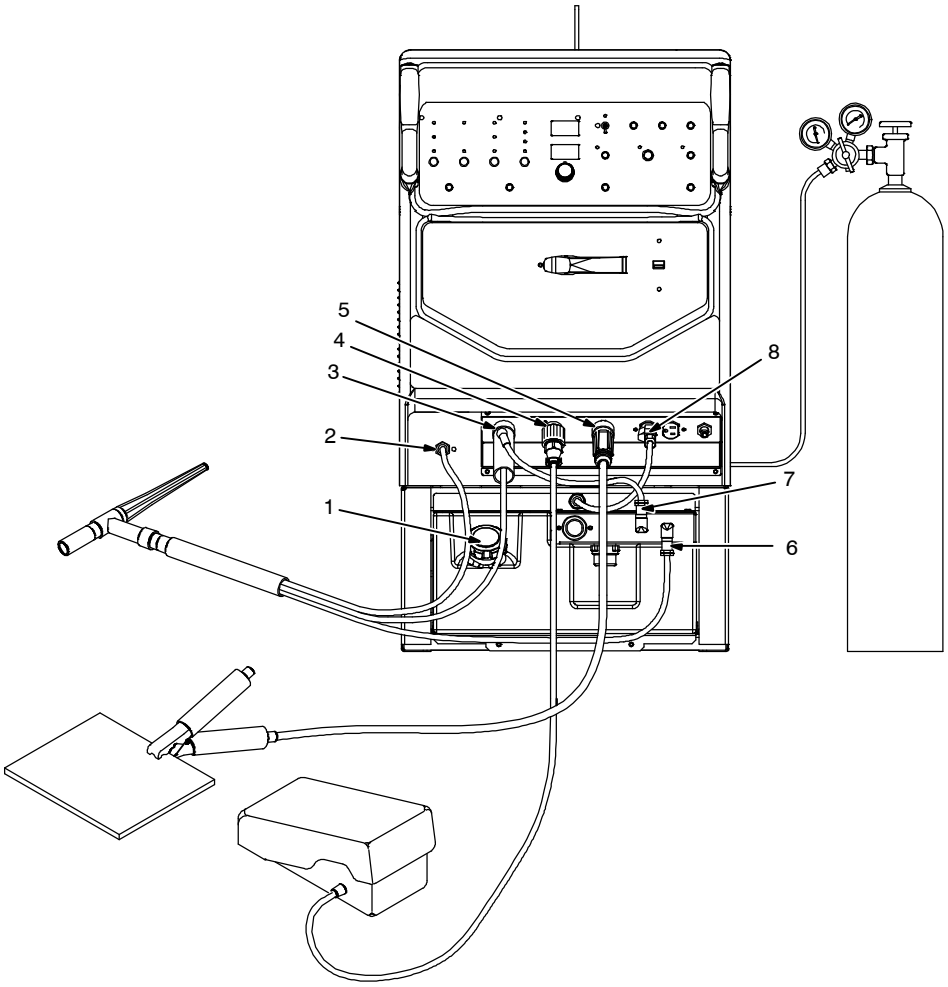


**Disconnect cooler plug from welding power source receptacle before filling.**

1. Cap

Remove cap and fill tank with three gallons of distilled or deionized water for operations above 32° F (0° C), or three gallons of Miller coolant part no. 043810.

2. Gas Out Connection

Connect TIG torch gas hose to gas out fitting.

3. Electrode Weld Output Terminal

Connect TIG torch to electrode weld output terminal.

4. Remote 14 Receptacle

Connect remote control to receptacle if desired.

5. Work Weld Output Terminal

Connect work lead to work weld output terminal.

6. Water-Out (To Torch) Connection

Connect torch water-out (blue) hose to welding power source water-in connection.

7. Water-In (From Torch) Connection

Connect torch water-in (red) hose to welding power source water-out connection.

8. Cooler Power Cord

☞ *RC2 is a designated use receptacle intended only for supplying AC power to a Miller-approved cooler.*

Connect plug to cooler receptacle to provide power to the cooler.

Tools Needed:

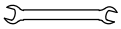

11/16 in., (21 mm for IEC units)

| Application | GTAW Or Where HF* Is Used |
|---|---|
| 3-1/2 Gal<br>Coolant | Low Conductivity Coolant No. 043810**;<br>Distilled Or Deionized Water OK Above 32° F (0° C) |

*HF: High Frequency Current

**Coolant 043810, a 50/50 solution, protect to -37° F (-38° C) and resist algae growth.

***NOTICE*** *– Use of any coolant other than those listed in the table voids the warranty on any parts that come in contact with the coolant (pump, radiator, etc.)*

804994-C

## 5-11. Stick Connections

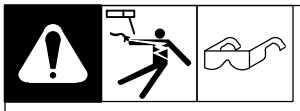

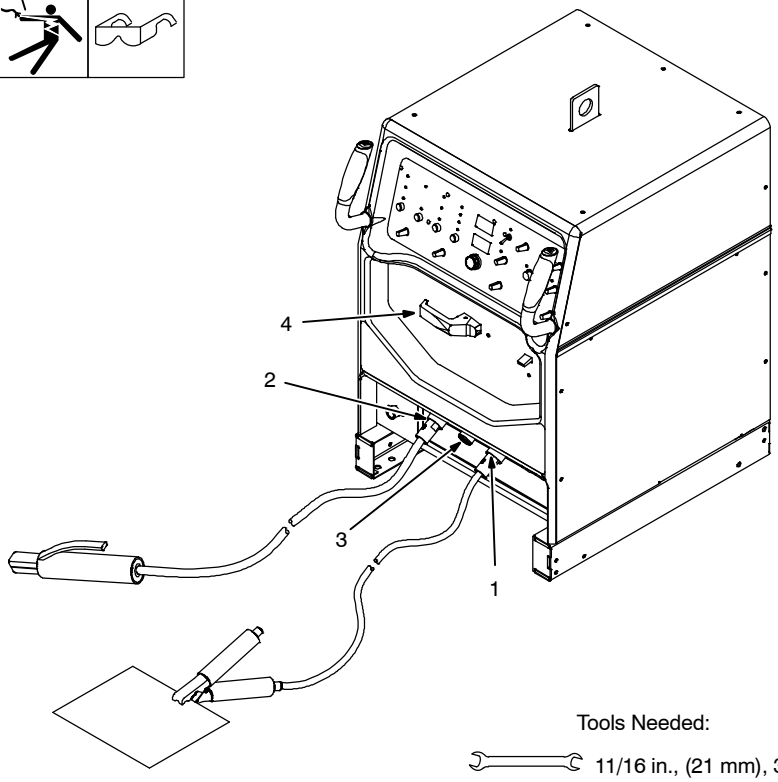


**Turn Off power before making connections.**

1. Work Weld Output Terminal

Connect work lead to work weld output terminal.

2. Electrode Weld Output Terminal

Connect electrode holder to electrode weld output terminal.

3. Remote 14 Receptacle

If desired, connect remote control to Remote 14 receptacle (see Section 5-4).

4. Output Selector Switch (See Section 6-2)

Switch is shown in DCEP (direct current electrode positive) position for Stick DCEP welding. For front panel control display, see Section 5-12. For Stick AC welding, place switch in AC position. For Stick AC front panel control display, see Section 5-13.

Tools Needed:

11/16 in., (21 mm), 3/4 in.

803587-C

# Notes

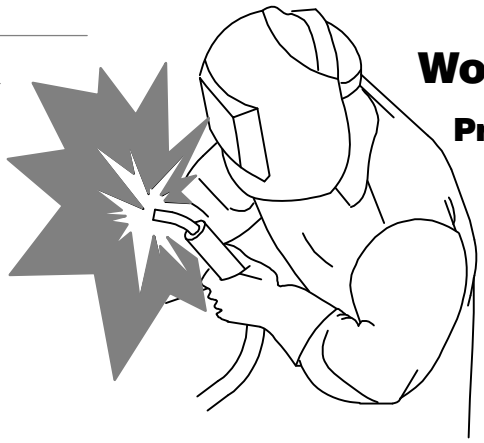

**Work like a Pro!**

**Pros weld and cut safely. Read the safety rules at the beginning of this manual.**

## 5-12. Front Panel Display For Stick DCEP (Direct Current Electrode Positive)

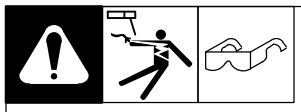

1. Front Panel

Correct front panel display for basic Stick DCEP welding.

☞ *For all front panel switch pad controls: press switch pad to turn on light and enable function.*

Gray on nameplate indicates a Stick function (see Section 6-1 for description of controls).

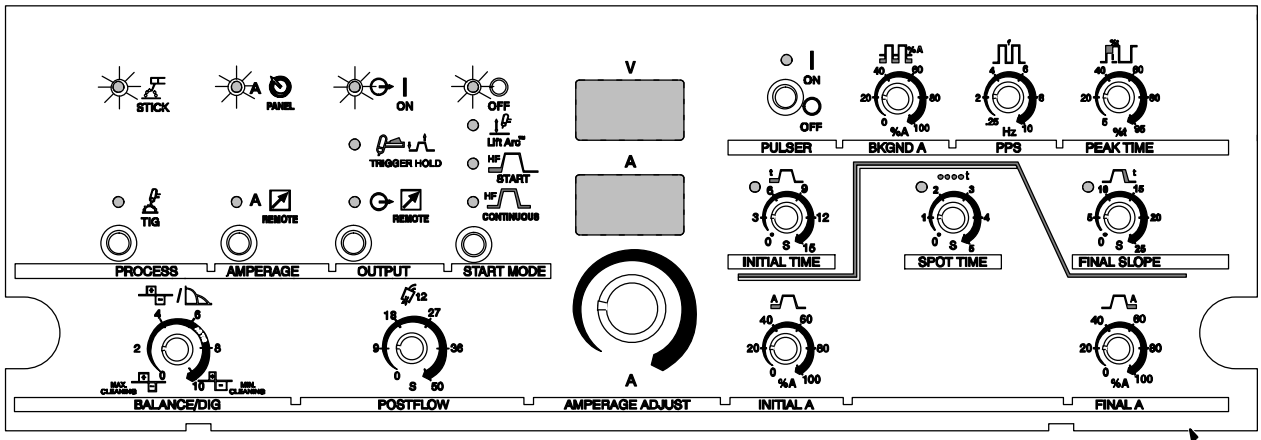


1

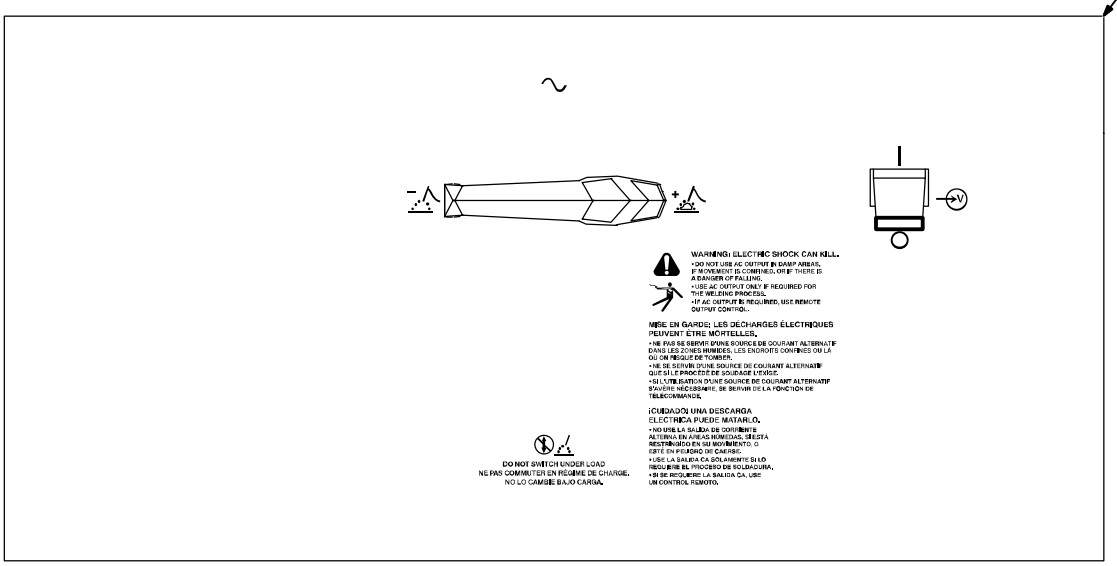


217264-G / Ref. 250526-C

## 5-13. Front Panel Display For Stick AC

1. Front Panel

Correct front panel display for basic Stick AC welding.

☞ *For all front panel switch pad controls: press switch pad to turn on light and enable function.*

Gray on nameplate indicates a Stick function (see Section 6-1 for description of controls).

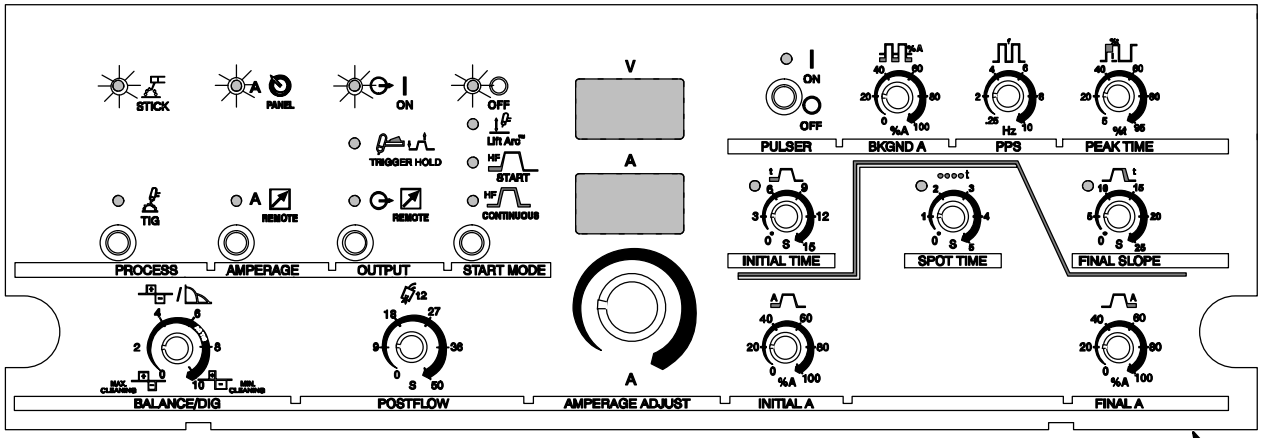


1

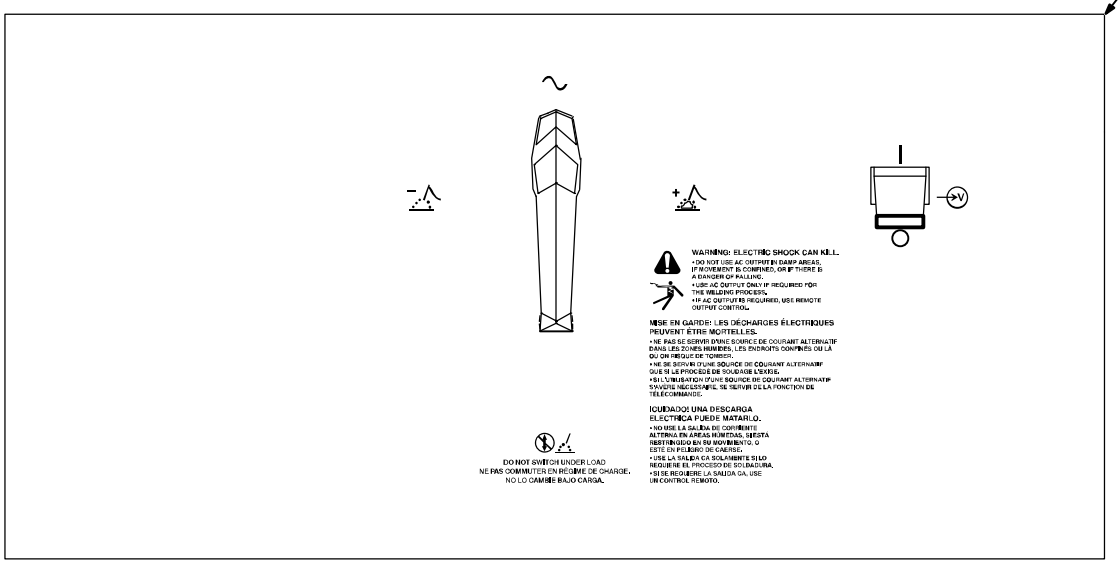


217264-G / Ref. 250526-C

# 5-14. Electrical Service Guide

## A. For 250 DX Models

☞ *Input amperage may be higher than shown in table when Balance Control is in an unbalanced position.*

☞ *All values in both tables were calculated at 60% duty cycle.*

☞ *Actual input voltage cannot exceed ± 10% of indicated required input voltage shown in both tables. If actual input voltage is outside of this range, damage to unit may occur.*

**Failure to follow these electrical service guide recommendations could create an electric shock or fire hazard. These recommendations are for a dedicated circuit sized for the rated output and duty cycle of the welding power source.**
**In dedicated circuit installations, the National Electrical Code (NEC) allows the receptacle or conductor rating to be less than the rating of the circuit protection device. All components of the circuit must be physically compatible. See NEC articles 210.21, 630.11, and 630.12.**

| 50/60 Hertz Models | Without Power Factor Correction | | | | | | | |
|---|---|---|---|---|---|---|---|---|
| **Input Voltage (V)** | 200 | 220 | 230 | 400 | 440 | 460 | 520 | 575 |
| **Input Amperes (A) At Rated Output** | 88 | 82 | 77 | 45 | 41 | 38 | 35 | 31 |
| **Max Recommended Standard Fuse Or Circuit Breaker Rating In Amperes** — **Circuit Breaker [1]** | | | | | | | | |
| **Time-Delay Fuse [2]** | 125 | 125 | 125 | 70 | 60 | 60 | 50 | 45 |
| **Normal Operating (Fast) Fuse [3]** | 125 | 125 | 125 | 70 | 60 | 60 | 50 | 45 |
| **Min Input Conductor Size In AWG[4]** | 4 | 6 | 6 | 8 | 8 | 10 | 10 | 10 |
| **Max Recommended Input Conductor Length In Feet (Meters)** | 167 (51) | 137 (42) | 153 (47) | 305 (93) | 369 (112) | 281 (86) | 352 (107) | 439 (134) |
| **Min Grounding Conductor Size In AWG[4]** | 6 | 6 | 6 | 8 | 10 | 10 | 10 | 10 |

Reference: 2014 National Electrical Code (NEC) (including article 630)

1 If a circuit breaker is used in place of a fuse, choose a circuit breaker with time-current curves comparable to the recommended fuse.

2 “Time-Delay” fuses are UL class “RK5” . See UL 248.

3 “Normal Operating” (general purpose - no intentional delay) fuses are UL class “K5” (up to and including 60 amps), and UL class “H” ( 65 amps and above).

4 Conductor data in this section specifies conductor size (excluding flexible cord or cable) between the panelboard and the equipment per NEC Table 310.15(B)(16). If a flexible cord or cable is used, minimum conductor size may increase. See NEC Table 400.5(A) for flexible cord and cable requirements.

**Failure to follow these electrical service guide recommendations could create an electric shock or fire hazard. These recommendations are for a dedicated circuit sized for the rated output and duty cycle of the welding power source.**
**In dedicated circuit installations, the National Electrical Code (NEC) allows the receptacle or conductor rating to be less than the rating of the circuit protection device. All components of the circuit must be physically compatible. See NEC articles 210.21, 630.11, and 630.12.**

| 50/60 Hertz Models | With Power Factor Correction | | | | | | | |
|---|---|---|---|---|---|---|---|---|
| **Input Voltage (V)** | 200 | 220 | 230 | 400 | 440 | 460 | 520 | 575 |
| **Input Amperes (A) At Rated Output** | 60 | 61 | 52 | 34 | 31 | 26 | 26 | 21 |
| **Max Recommended Standard Fuse Or Circuit Breaker Rating In Amperes** — **Circuit Breaker [1]** | | | | | | | | |
| **Time-Delay Fuse [2]** | 90 | 90 | 80 | 50 | 45 | 40 | 40 | 30 |
| **Normal Operating (Fast) Fuse [3]** | 90 | 90 | 80 | 50 | 45 | 40 | 40 | 30 |
| **Min Input Conductor Size In AWG[4]** | 8 | 8 | 8 | 10 | 10 | 10 | 10 | 12 |
| **Max Recommended Input Conductor Length In Feet (Meters)** | 87 (26) | 102 (31) | 115 (35) | 226 (69) | 274 (84) | 308 (94) | 383 (117) | 295 (90) |
| **Min Grounding Conductor Size In AWG[4]** | 8 | 8 | 8 | 10 | 10 | 10 | 10 | 12 |

Reference: 2014 National Electrical Code (NEC) (including article 630)

1 If a circuit breaker is used in place of a fuse, choose a circuit breaker with time-current curves comparable to the recommended fuse.

2 “Time-Delay” fuses are UL class “RK5” . See UL 248.

3 “Normal Operating” (general purpose - no intentional delay) fuses are UL class “K5” (up to and including 60 amps), and UL class “H” ( 65 amps and above).

4 Conductor data in this section specifies conductor size (excluding flexible cord or cable) between the panelboard and the equipment per NEC Table 310.15(B)(16). If a flexible cord or cable is used, minimum conductor size may increase. See NEC Table 400.5(A) for flexible cord and cable requirements.

## B. For 350 LX Models

☞ *Input amperage may be higher than shown in table when Balance Control is in an unbalanced position.*

☞ *All values in both tables were calculated at 60% duty cycle.*

☞ *Actual input voltage cannot exceed ± 10% of indicated required input voltage shown in both tables. If actual input voltage is outside of this range, damage to unit may occur.*

**Failure to follow these electrical service guide recommendations could create an electric shock or fire hazard. These recommendations are for a dedicated circuit sized for the rated output and duty cycle of the welding power source.**
**In dedicated circuit installations, the National Electrical Code (NEC) allows the receptacle or conductor rating to be less than the rating of the circuit protection device. All components of the circuit must be physically compatible. See NEC articles 210.21, 630.11, and 630.12.**

| 50/60 Hertz Models | Without Power Factor Correction | | | | | | | |
|---|---|---|---|---|---|---|---|---|
| **Input Voltage (V)** | 200 | 220 | 230 | 400 | 440 | 460 | 520 | 575 |
| **Input Amperes (A) At Rated Output** | 125 | 103 | 110 | 57 | 52 | 55 | 43 | 42 |
| **Max Recommended Standard Fuse Or Circuit Breaker Rating In Amperes** — **Circuit Breaker [1]** | | | | | | | | |
| **Time-Delay Fuse [2]** | 150 | 125 | 125 | 70 | 70 | 60 | 60 | 50 |
| **Normal Operating (Fast) Fuse [3]** | 175 | 175 | 175 | 90 | 90 | 80 | 70 | 70 |
| **Min Input Conductor Size In AWG[4]** | 3 | 3 | 4 | 8 | 8 | 8 | 8 | 8 |
| **Max Recommended Input Conductor Length In Feet (Meters)** | 151 (46) | 182 (56) | 171 (52) | 246 (75) | 298 (91) | 326 (99) | 416 (127) | 509 (155) |
| **Min Grounding Conductor Size In AWG[4]** | 6 | 6 | 6 | 8 | 8 | 8 | 8 | 8 |

Reference: 2014 National Electrical Code (NEC) (including article 630)

1 If a circuit breaker is used in place of a fuse, choose a circuit breaker with time-current curves comparable to the recommended fuse.

2 “Time-Delay” fuses are UL class “RK5” . See UL 248.

3 “Normal Operating” (general purpose - no intentional delay) fuses are UL class “K5” (up to and including 60 amps), and UL class “H” ( 65 amps and above).

4 Conductor data in this section specifies conductor size (excluding flexible cord or cable) between the panelboard and the equipment per NEC Table 310.15(B)(16). If a flexible cord or cable is used, minimum conductor size may increase. See NEC Table 400.5(A) for flexible cord and cable requirements.

**Failure to follow these electrical service guide recommendations could create an electric shock or fire hazard. These recommendations are for a dedicated circuit sized for the rated output and duty cycle of the welding power source.**
**In dedicated circuit installations, the National Electrical Code (NEC) allows the receptacle or conductor rating to be less than the rating of the circuit protection device. All components of the circuit must be physically compatible. See NEC articles 210.21, 630.11, and 630.12.**

| 50/60 Hertz Models | With Power Factor Correction | | | | | | | |
|---|---|---|---|---|---|---|---|---|
| **Input Voltage (V)** | 200 | 220 | 230 | 400 | 440 | 460 | 520 | 575 |
| **Input Amperes (A) At Rated Output** | 92 | 77 | 78 | 40 | 39 | 38 | 33 | 31 |
| **Max Recommended Standard Fuse Or Circuit Breaker Rating In Amperes** — **Circuit Breaker [1]** | | | | | | | | |
| **Time-Delay Fuse [2]** | 110 | 100 | 90 | 50 | 50 | 45 | 40 | 35 |
| **Normal Operating (Fast) Fuse [3]** | 125 | 125 | 125 | 70 | 60 | 60 | 50 | 45 |
| **Min Input Conductor Size In AWG[4]** | 4 | 6 | 6 | 8 | 8 | 8 | 10 | 10 |
| **Max Recommended Input Conductor Length In Feet (Meters)** | 145 (44) | 119 (36) | 130 (40) | 263 (80) | 318 (97) | 347 (106) | 300 (91) | 367 (112) |
| **Min Grounding Conductor Size In AWG[4]** | 6 | 6 | 6 | 8 | 10 | 10 | 10 | 10 |

Reference: 2014 National Electrical Code (NEC) (including article 630)

1 If a circuit breaker is used in place of a fuse, choose a circuit breaker with time-current curves comparable to the recommended fuse.

2 “Time-Delay” fuses are UL class “RK5” . See UL 248.

3 “Normal Operating” (general purpose - no intentional delay) fuses are UL class “K5” (up to and including 60 amps), and UL class “H” ( 65 amps and above).

4 Conductor data in this section specifies conductor size (excluding flexible cord or cable) between the panelboard and the equipment per NEC Table 310.15(B)(16). If a flexible cord or cable is used, minimum conductor size may increase. See NEC Table 400.5(A) for flexible cord and cable requirements.

## 5-15. Placing Jumper Links

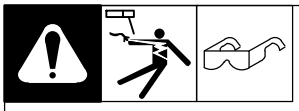

Label found on 250 DX models with the following stock numbers: 907194, 907194-021 907194-031 and, 907194-032

Label found on 350 LX models with the following stock numbers: 907198, 907198-011, 907198-021, 907198-031 and 907198-032

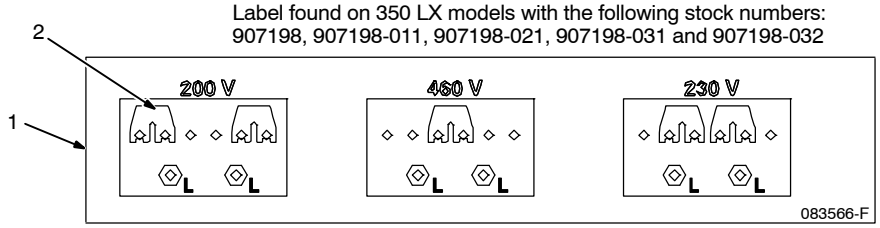


**Or**

Label found on 250 DX models with the following stock numbers: 907195, 907195-021, 907195-031 and, 907195-032

Label found on 350 LX models with the following stock numbers: 907199, 907199-021, 907199-031 and 907199-032

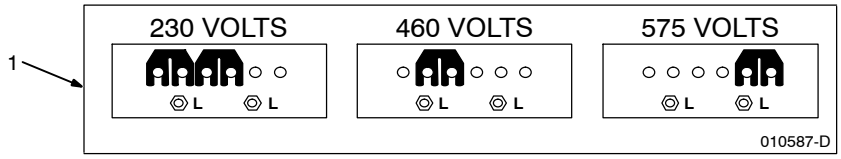


**Or**

Label found on 250 DX models with stock number 907408, and 907516

Label found on 350 LX models with stock number 907409, and 907517

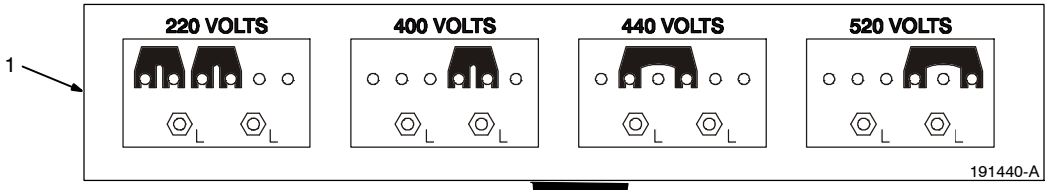


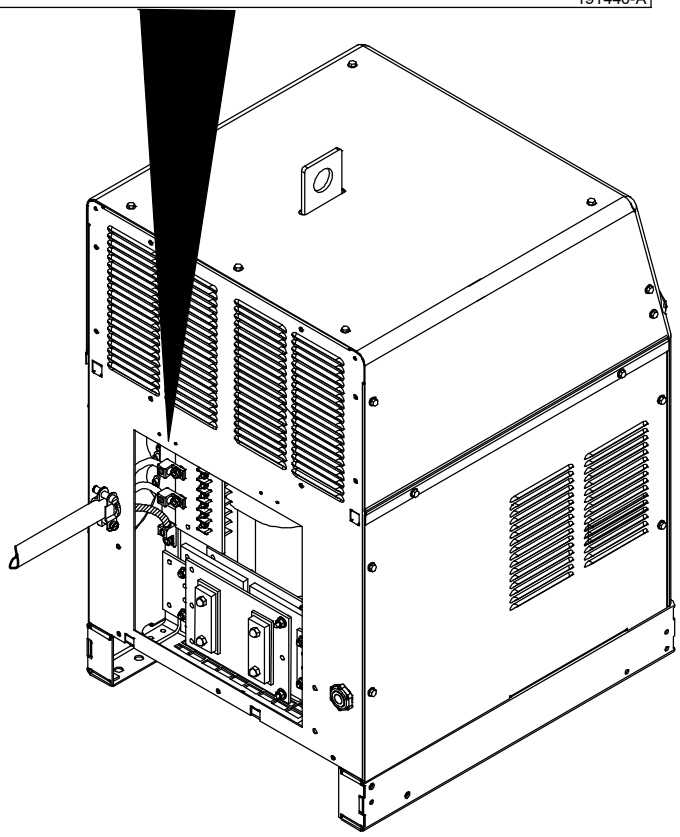

**Disconnect and lockout/tag-out input power before installing or moving jumper links.**

Check input voltage available at site.

1. Jumper Link Label

Check label – only one label is on unit.

2. Jumper Links

Move jumper links to match input voltage.

Close and secure access door, or go on to Section 5-16.

Tools Needed:

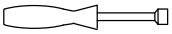

3/8 in.

Ref. 803585-C

## 5-16. Connecting Input Power

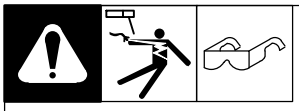

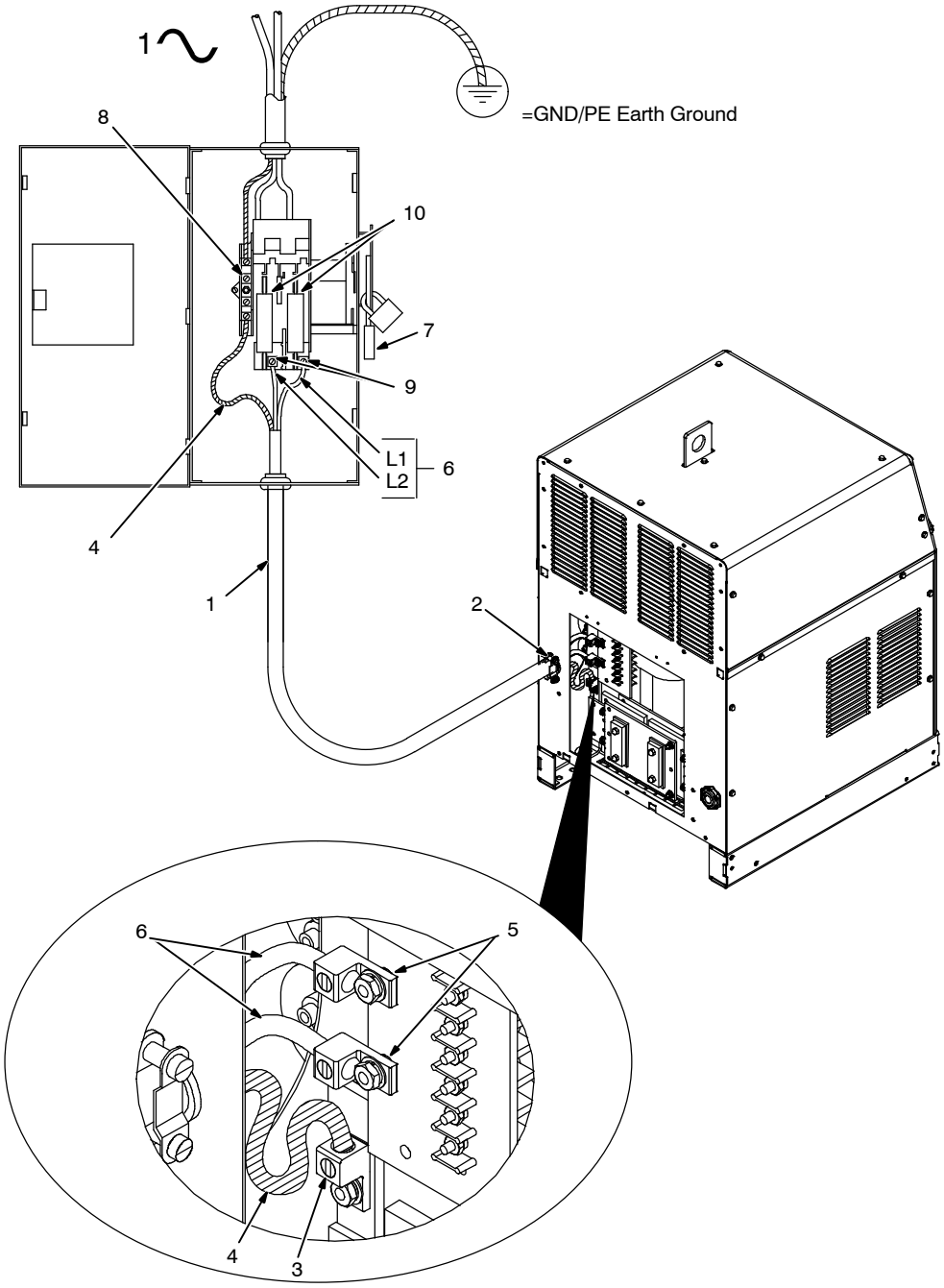


Tools Needed:

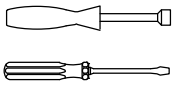

3/8 in.

Input9 2013–02 / 803585-D

## 5-16 Connecting Input Power (Continued)

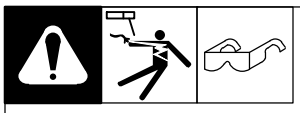

**Installation must meet all National and Local Codes – have only qualified persons make this installation.**

**Disconnect and lockout/tagout input power before connecting input conductors from unit. Follow established procedures regarding the installation.**

**Make input power connections to the welding power source first.**

**Always connect green or green/yellow conductor to supply grounding terminal first, and never to a line terminal.**

See rating label on unit and check input voltage available at site.

1. Input Power Conductors (Customer Supplied Cord)

Select size and length of conductors using Section 5-14. Conductors must comply with national, state, and local electrical codes. If applicable, use lugs of proper amperage capacity and correct hole size.

**Welding Power Source Input Power Connections**

2. Strain Relief

Route conductors (cord) through strain relief and tighten screws.

3. Machine Grounding Terminal
4. Green Or Green/Yellow Grounding Conductor

Connect green or green/yellow grounding conductor to welding power source grounding terminal first.

5. Welding Power Source Line Terminals
6. Input Conductors L1 And L2

Connect input conductors L1 and L2 to welding power source line terminals.

Close and secure access door on welding power source.

**Disconnect Device Input Power Connections**

7. Disconnect Device (switch shown in OFF position)
8. Disconnect Device (Supply) Grounding Terminal

Connect green or green/yellow grounding conductor to disconnect device grounding terminal first.

9. Disconnect Device Line Terminals

Connect input conductors L1 and L2 to disconnect device line terminals.

10. Overcurrent Protection

Select type and size of overcurrent protection using Section 5-14 (fused disconnect switch shown).

Close and secure door on line disconnect device. Follow established lockout/tagout procedures to put unit in service.

Input9 2013–02

# Notes

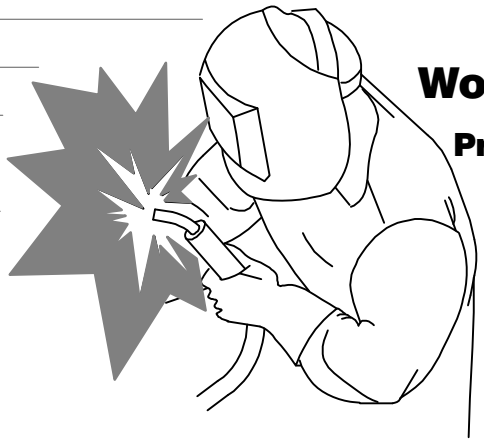

**Work like a Pro!**

**Pros weld and cut safely. Read the safety rules at the beginning of this manual.**

# SECTION 6 – OPERATION

## 6-1. Controls (350 LX Nameplates Shown)

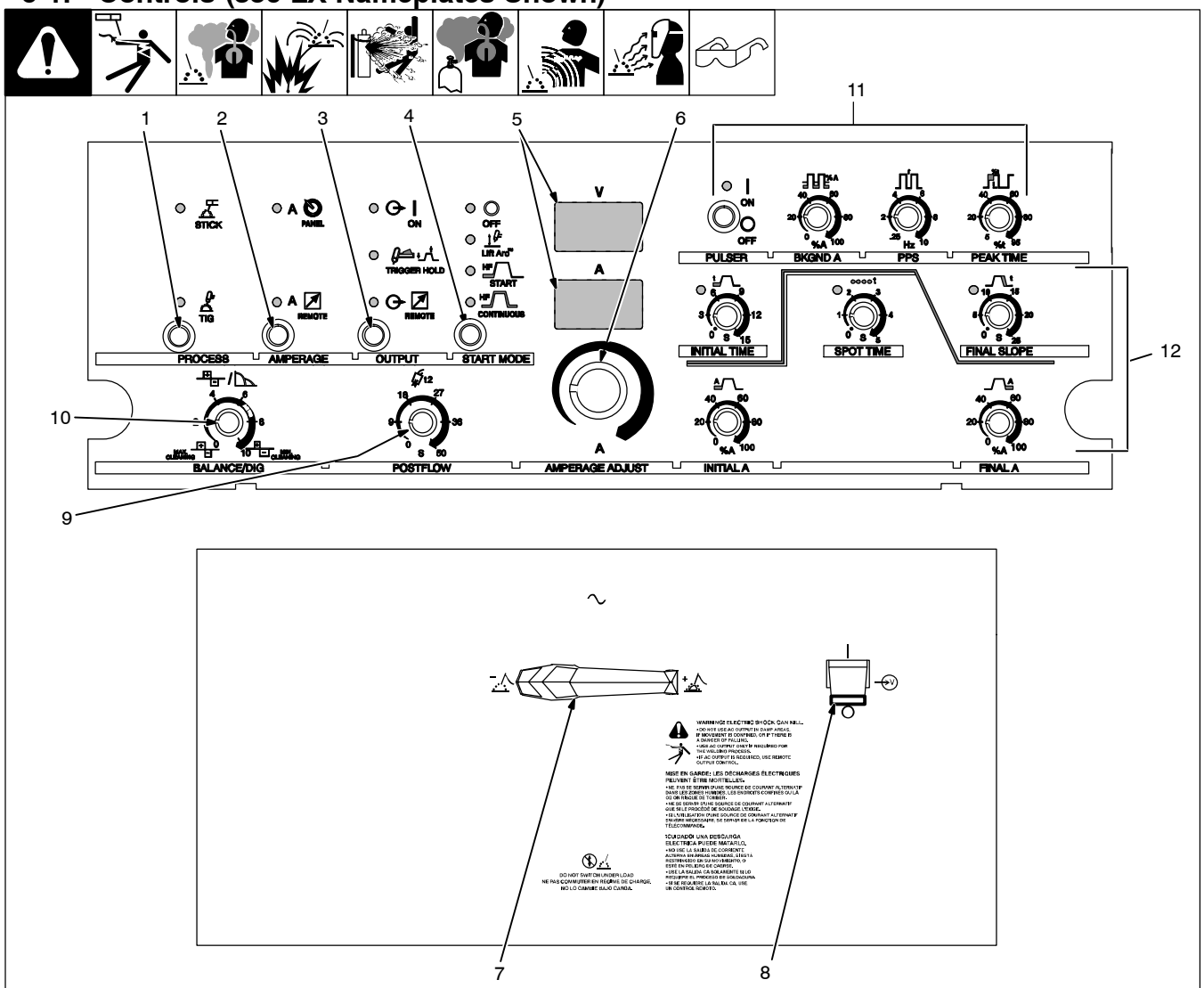


☞ *Top row of lights in upper left corner are On for SMAW. Bottom row are On for GTAW.*

Green on nameplate indicates a TIG function, Gray indicates a Stick function.

1 Process Control

See Section 6-3.

2 Amperage Control

See Section 6-4.

3. Output Control

See Section 6-5.

4. Start Mode Control

See Section 6-9.

5 Voltmeter And Ammeter

Voltmeter displays average voltage (to the nearest 0.1 V) at the weld output terminals.

Use meter to preset amperage. Meter displays average weld amperage output of unit to nearest ampere when welding.

Meters are self-calibrating. No adjustment available.

6 Amperage Adjustment Control

Use control to adjust amperage, and preset amperage on ammeter. This control may be adjusted while welding.

**For remote amperage control**, front panel control setting is the maximum amperage available. For example: If front panel control is set to 200 amps, the range of the remote amperage control is 3 to 200 amps for 250 DX models, and 3 to 200 amps for 350 LX models.

**For pulse welding**, use Amperage Adjust control to select from 3-300 amps of peak amperage for 250 DX models, or 3–400 amps of peak amperage for 350 LX models (see Section 6-12).

**For spot welding**, use Amperage Adjust control to select from 3-310 amps for 250 DX models, or 3–400 amps for 350 LX models (see Section 6-16).

7 Output Selector Switch

See Section 6-2.

8 Power Switch

Use switch to turn unit Off and On.

9 Postflow Time Control

Use control to set length of time (0–50 seconds) gas flows after welding stops. It is important to set enough time to allow gas to flow until after the tungsten and weld puddle has cooled down.

**Application:**

Postflow is required to cool the tungsten and weld, and to prevent contamination of tungsten and weld. Increase postflow time if tungsten or weld are dark in appearance (approximately 1 second per 10 ampere of welding current).

10 Balance/DIG Control

See Section 6-10.

11 Pulser Controls (Optional on 250 DX model)

See Section 6-12.

12. Sequence Controls (Optional)

See Section 6-13.

217264-G / Ref. 250526-C

## 6-2. Output Selector Switch

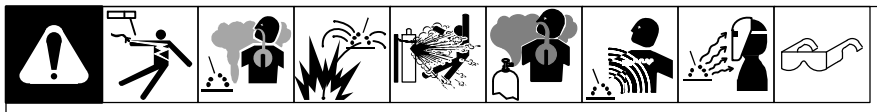

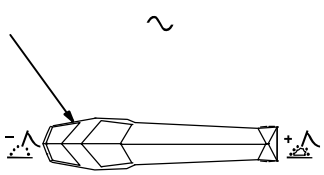

WARNING: ELECTRIC SHOCK CAN KILL.
• DO NOT USE AC OUTPUT IN DAMP AREAS, IF MOVEMENT IS CONFINED, OR IF THERE IS A DANGER OF FALLING.
• USE AC OUTPUT ONLY IF REQUIRED FOR THE WELDING PROCESS.
• IF AC OUTPUT IS REQUIRED, USE REMOTE OUTPUT CONTROL.

MISE EN GARDE: LES DÉCHARGES ÉLECTRIQUES PEUVENT ÊTRE MORTELLES.
• NE PAS SE SERVIR D'UNE SOURCE DE COURANT ALTERNATIF DANS LES ZONES HUMIDES, LES ENDROITS CONFINÉS OU LÀ OÙ ON RISQUE DE TOMBER.
• NE SE SERVIR D'UNE SOURCE DE COURANT ALTERNATIF QUE SI LE PROCÉDÉ DE SOUDAGE L'EXIGE.
• SI L'UTILISATION D'UNE SOURCE DE COURANT ALTERNATIF S'AVÈRE NÉCESSAIRE, SE SERVIR DE LA FONCTION DE TÉLÉCOMMANDE.

¡CUIDADO! UNA DESCARGA ELÉCTRICA PUEDE MATARLO.
• NO USE LA SALIDA DE CORRIENTE ALTERNA EN ÁREAS HÚMEDAS, SI ESTÁ RESTRINGIDO EN SU MOVIMIENTO, O ESTÉ EN PELIGRO DE CAERSE.
• USE LA SALIDA CA SOLAMENTE SI LO REQUIERE EL PROCESO DE SOLDADURA.
• SI SE REQUIERE LA SALIDA CA, USE UN CONTROL REMOTO.

DO NOT SWITCH UNDER LOAD
NE PAS COMMUTER EN RÉGIME DE CHARGE.
NO LO CAMBIE BAJO CARGA.

1. Output Selector Switch

**Do not use AC output in damp areas, if movement is confined, or if there is danger of falling. Use AC output ONLY if required for the welding process, and then use a remote control.**

**Do not change position of switch while welding or while under load.**

Use switch to select (DCEN) Direct Current Electrode Negative, AC, or (DCEP) Direct Current Electrode Positive output.

Changing position of Output Selector switch may change Process control, Current control, and Start Mode control, and may require changing Output control settings to properly function with latest Output Selector switch setting.

## 6-3. Process Control

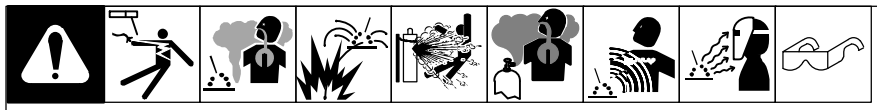

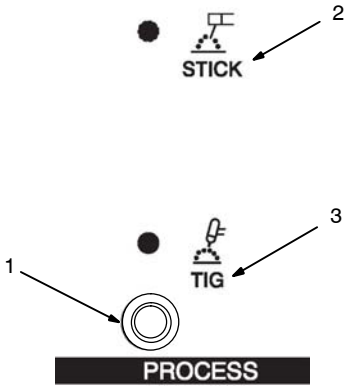


1. Process Control

Use control to select Stick or TIG process.

2. STICK Process

For Stick process, press button to toggle LED to Stick position.

3. TIG Process

For TIG process, press button to toggle LED to TIG position.

Lit LED indicates selected mode.

When Output Selector switch position changes, LED may change position, based upon last selection.

Ref. 217264-D / Ref. 215460-A

## 6-4. Amperage Control

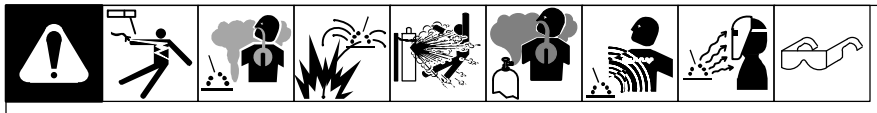

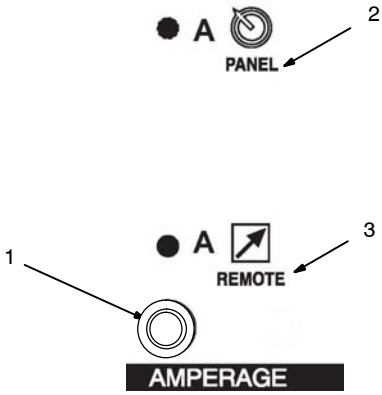


1. Amperage Control

Use control to select front panel or remote amperage control.

2. Front Panel Position

For front panel amperage control, press button to toggle LED to Panel position.

3. Remote Amperage Position

For remote amperage control, press button to toggle LED to Remote position (see Section 5-4).

Lit LED indicates selected mode.

When Output Selector switch position changes, LED may change position, based upon last selection.

Ref. 217264-D / Ref. 215460-A

## 6-5. Output Control

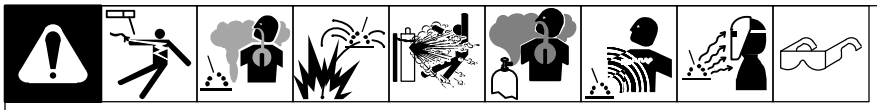

**Remote (Standard)Torch Trigger Operation**

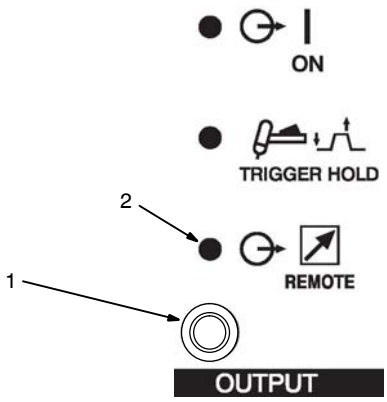


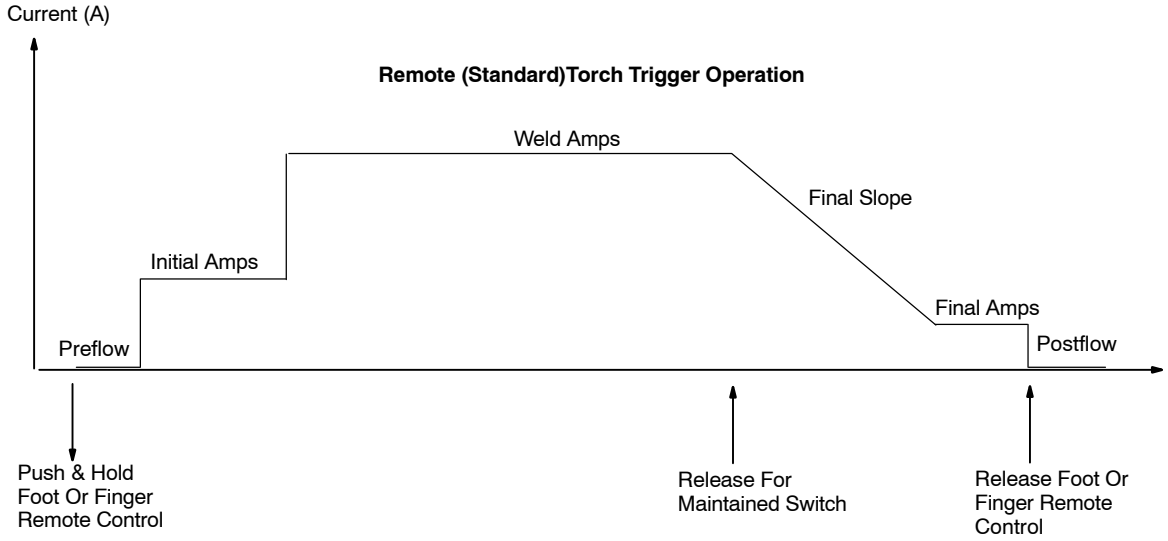


1. Output Control

**Weld output terminals are energized when power is On, and Output On LED is lit.**

Use control to select front panel, trigger hold, or remote output control.

Lit LED indicates selected mode.

For weld output, press button to toggle LED to On position.

2. Remote Trigger (Standard) Operation

For remote output control, press button to toggle LED to Remote position (see Section 5-4).

Torch trigger operation is as shown.

Initial weld amperage and final amperage is controlled by the remote device, not by the welding power source.

If On/Off only type trigger is used, it must be a maintained switch. All functions become active.

**Application:** Use Remote Trigger when the operator desires to use a foot pedal or finger amperage control.

When Output Selector switch (see Section 6-2) position changes, Output control LED will always switch to Remote.

**Trigger Hold (2T)**

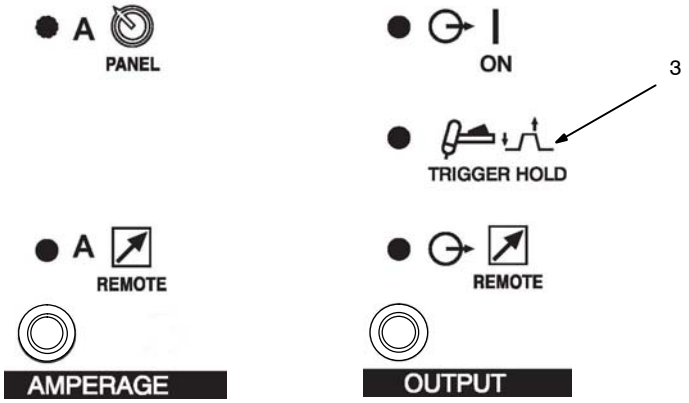


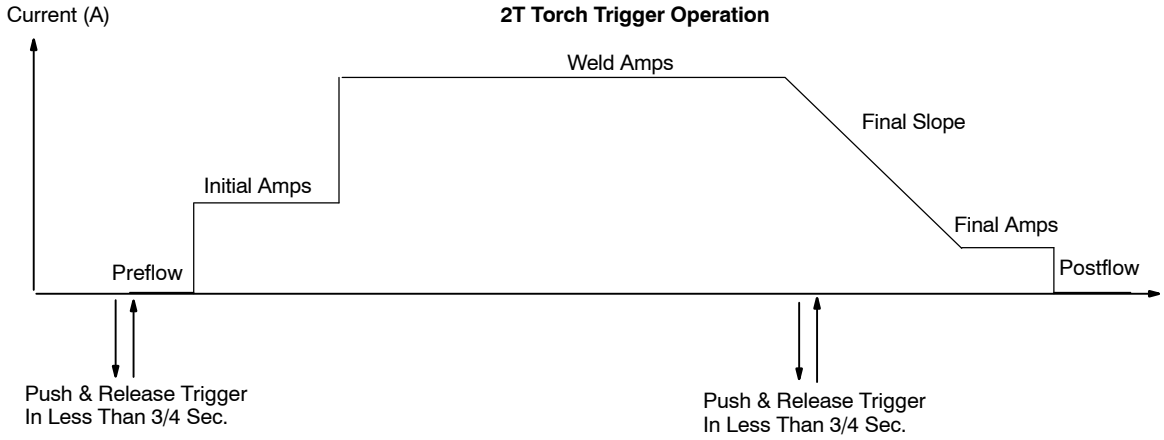


If torch trigger is held more than 3 seconds, operation reverts to Remote Trigger (Standard) mode (see previous page).
If arc is broken and trigger is depressed, HLP-10 will be displayed (see Section 8-1).

3. Trigger Hold

For trigger hold operation, press button to toggle LED to Trigger Hold position.

Torch trigger operation is as shown.

When a foot or finger remote control is connected to the welding power source, only trigger input is functional, as amperage is controlled by the welding power source.

**Application:** Trigger Hold (2T) can help to reduce operator fatigue when long extended welds are made.

## 6-6. 4T, 4T Momentary, And Mini Logic Trigger Operation (Requires Optional Sequence Controls)

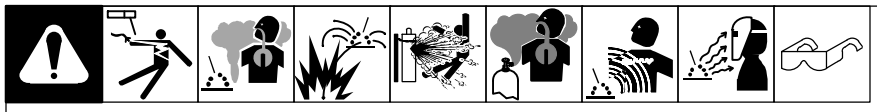

### 4T Torch Trigger Operation

If unit is equipped with optional Sequence Controls (see Section 6-13), 4T trigger method is available.

4T torch trigger operation is as shown.

While in 4T mode, there is a feature available during the main weld sequence that allows the operator to toggle between weld current and final current without breaking the arc.

When a remote switch is connected to the welding power source, only trigger input is functional. Amperage is controlled by the welding power source.

**Application:**

Use 4T trigger method when the functions of a remote current control are desired, but only a remote on/off control is available.

Select 4T trigger method according to Section 6-7.

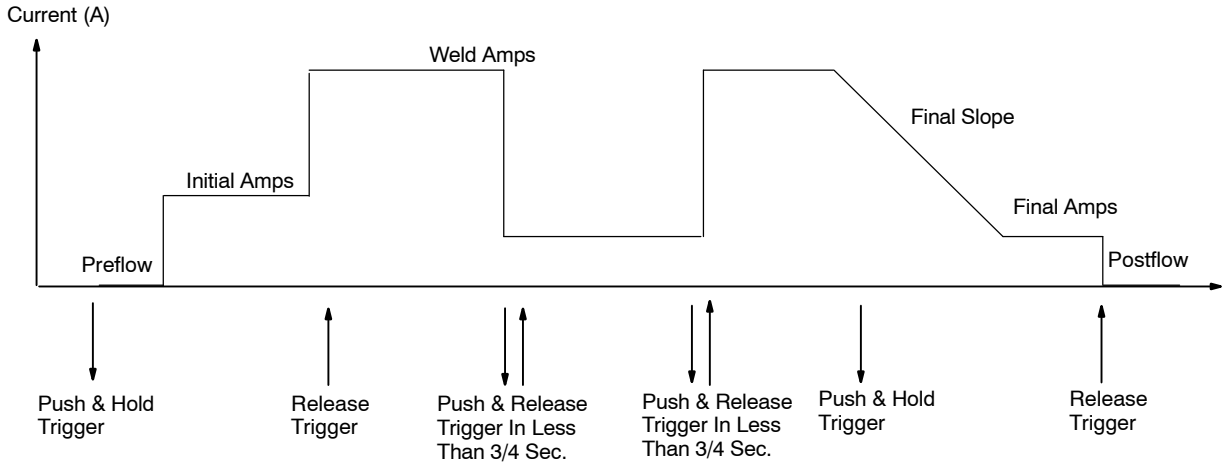


### 4T Momentary Torch Trigger Operation

If unit is equipped with optional Sequence Controls (see Section 6-13), 4T Momentary trigger method is available.

4T Momentary torch trigger operation is as shown.

While in 4T Momentary mode, once the operator toggles out of weld current and begins final slope, toggling again will break the arc and go to postflow.

When a remote switch is connected to the welding power source, only trigger input is functional. Amperage is controlled by the welding power source.

**Application:**

Use 4T Momentary trigger method when the functions of a remote current control are desired, but only a remote on/off control is available.

Select 4T Momentary trigger method according to Section 6-7.

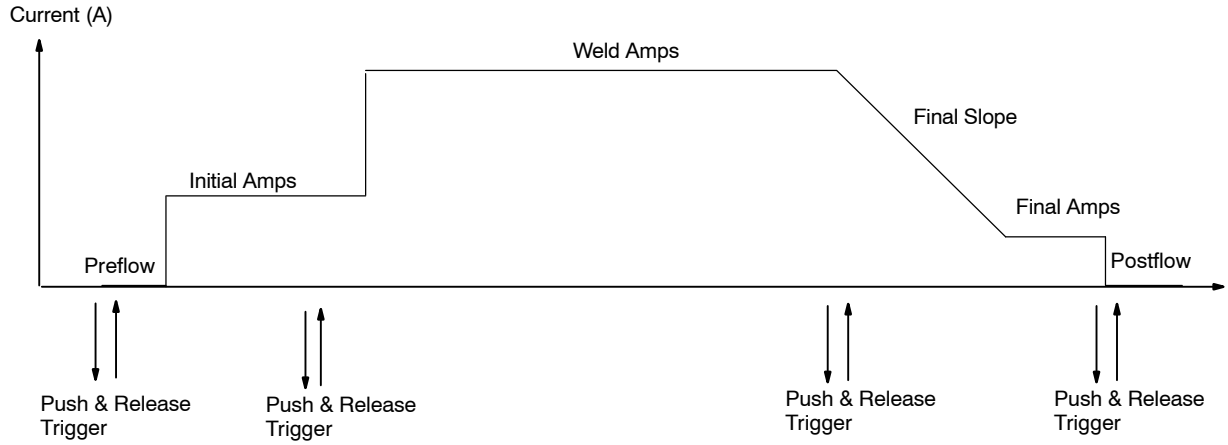

## Mini Logic Operation

If unit is equipped with optional Sequence Controls (see Section 6-13), Mini Logic operation is available.

Torch trigger operation is as shown.

During Mini Logic welding operation, the weld amperage can be manually changed from the initial amps level to the main weld amps level by pressing and releasing the torch trigger in less than 3/4 seconds.

When a remote switch is connected to the welding power source, only trigger input is functional. Amperage is controlled by the welding power source.

**Application:** This ability to change amperage levels without either initial slope or final slope, gives the operator the opportunity to adjust filler metal without breaking the arc.

Select Mini Logic according to Section 6-7.

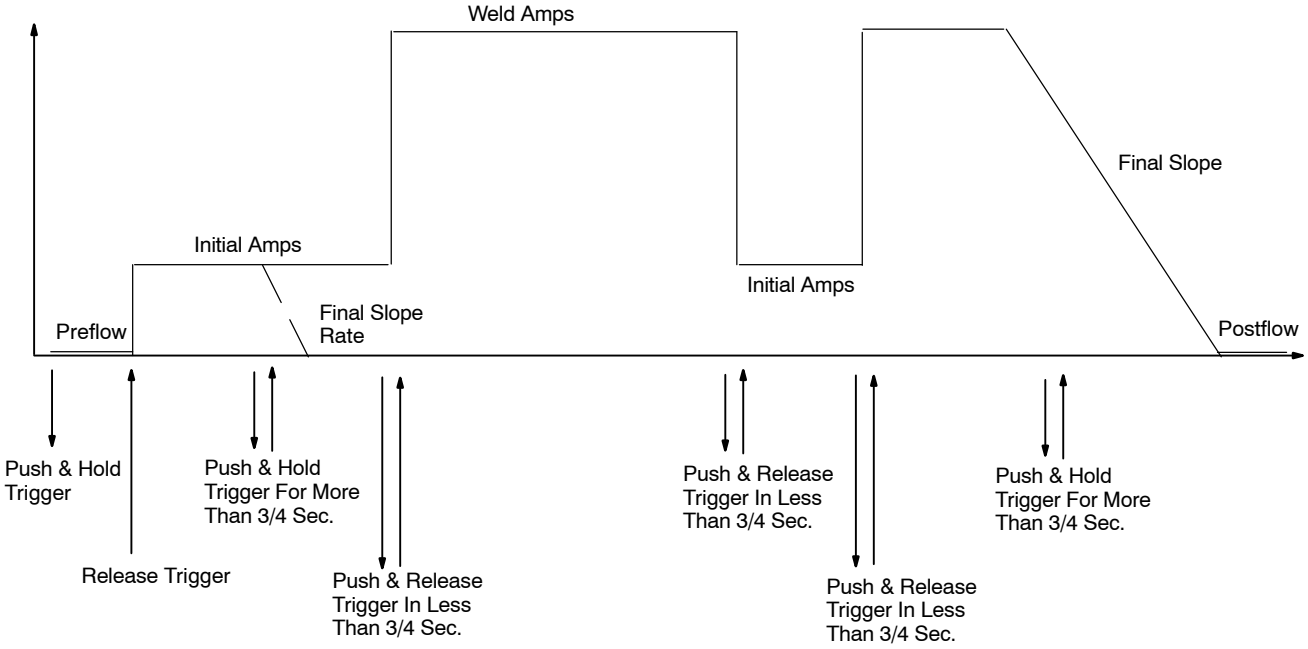

## 6-7. Reconfiguring Trigger Hold For 4T And Mini Logic Control

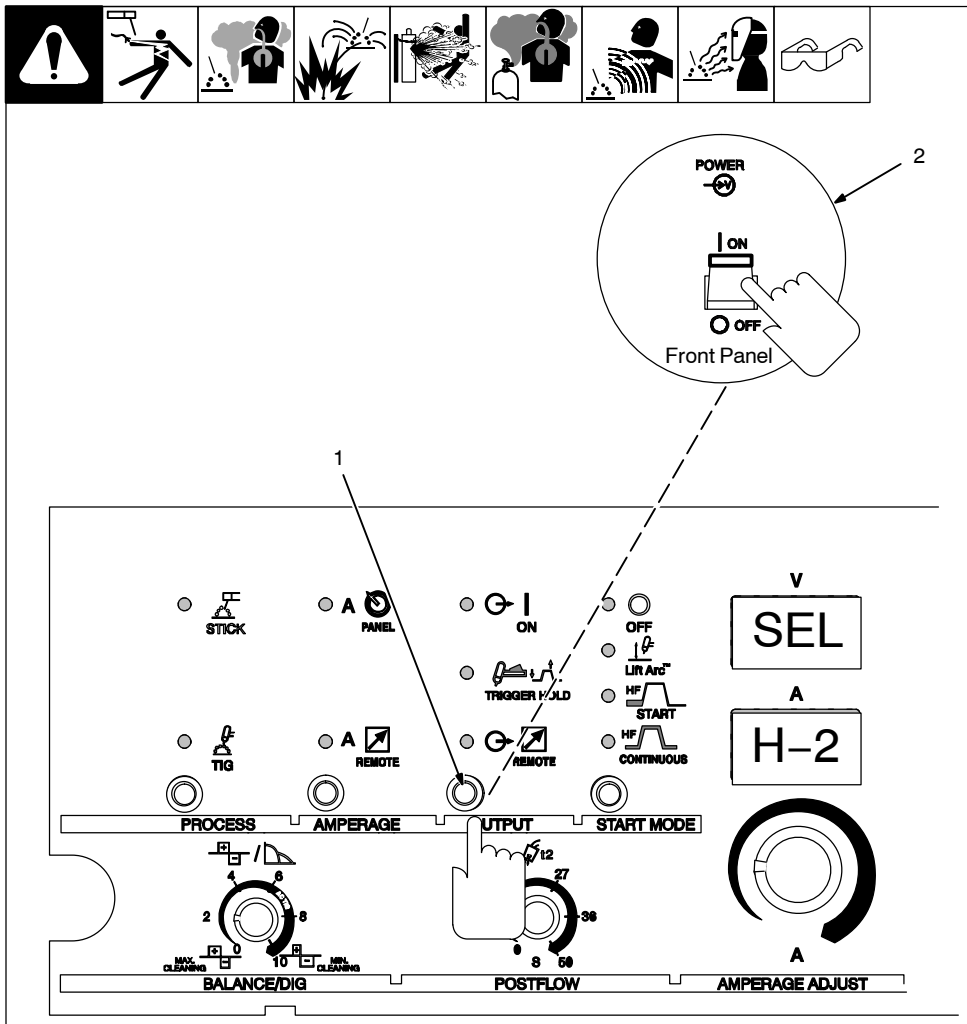


1. Output Control
2. Power Switch

To reconfigure Trigger Hold, turn Off power, push and hold Output control button and turn On power switch. Hold button for approximately 7 seconds (or until software version number _ _ _ _ _ _-_clears, and meters display [SEL] [H–2].

Press Output control button to change functions. Active function will be displayed on amperage (bottom) meter.

3. Meter Displays

Meter displays for the different functions will be as shown.

Press torch trigger or turn power Off to save setting.

Proceed to Section 6-6 for 4T Operation.

Proceed to Section 6-6 for Mini Logic operation.

Proceed to Section 6-6 for 4T Momentary operation.

These features are only available when optional Sequencer is installed.

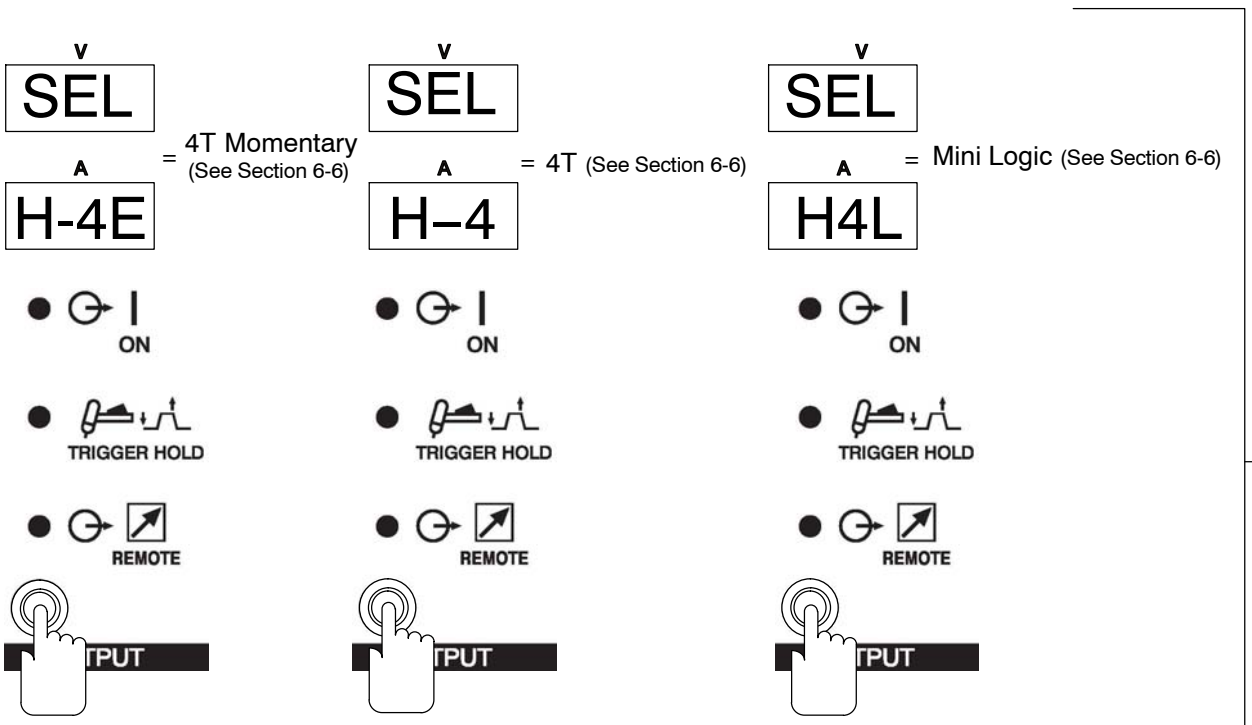

## 6-8. Selecting TIG Starting Characteristics Using Syncro-Start™ Technology

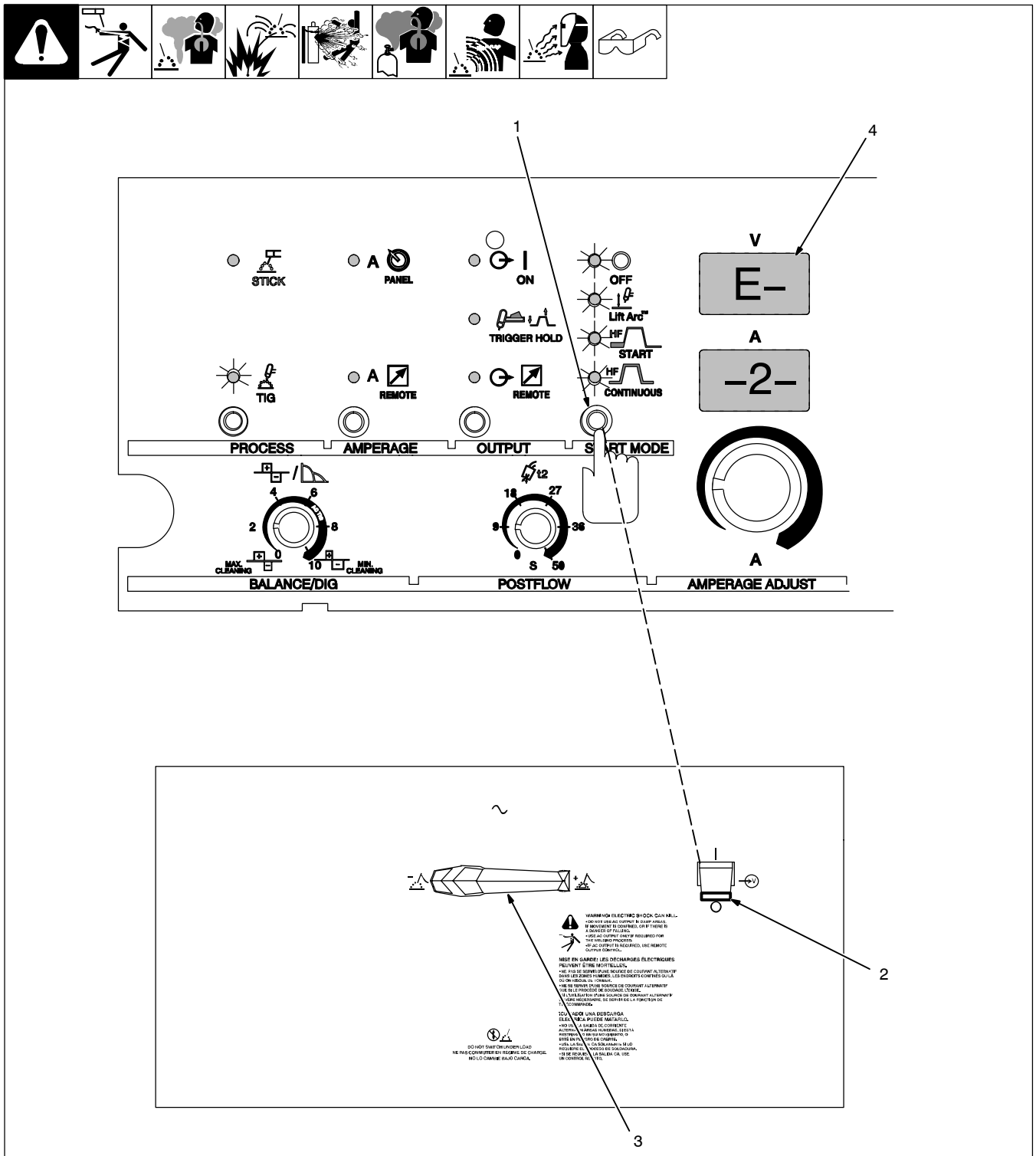


Use this function to select desired TIG starting characteristics.

1. Start Mode
2. Power Switch
3. Output Selector Switch
4. Meters

To select or change TIG starting characteristics, proceed as follows: turn Off power. Place Output Selector switch in desired position (each position, DCEN, AC, or DCEP has three applicable start characteristics options). Push and hold Start Mode button and turn On power. Hold button for approximately 7 seconds (or until software version number_ _ _ _ _ _-_ clears meters).

The TIG LED and all four Start LEDs will light, and the meters will display [E–] [–2–], [AC] [–2–], or [EP] [–2-], depending on position of Polarity switch.

Press Start Mode button again to step through the three start characteristics choices. Amperage (bottom) meter displays active choice *1*= light start, *2*=medium/normal start, *3*=high/hot start.

Press torch trigger or turn Off power to save setting.

**Application:**

**Select** *1* (light/soft start) – when welding at low amperages on thin gauge material.

**Select** *2* (medium/normal start) – factory default setting used for most welding applications.

**Select** *3* (high/hot start) – when welding at high amperages on thick materials with a large diameter tungsten.

## 6-9. Start Mode

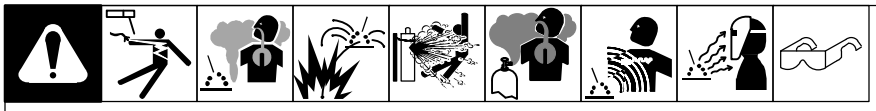

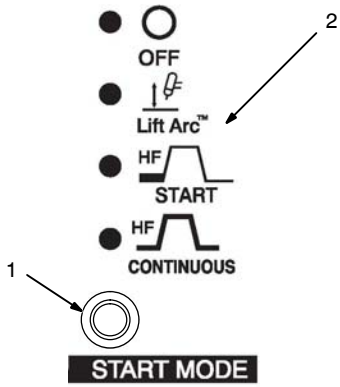


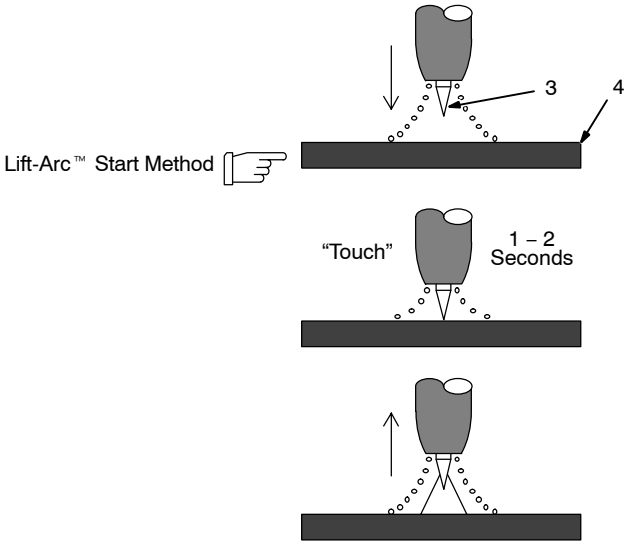


1. Start Mode
2. OFF Position

For SMAW welding, press button to toggle LED to Off position.

For GTAW welding, use control to select Off for no HF, Lift-Arc™, HF for arc starting only, or continuous HF.

**Application:**

When Off is selected, use the scratch method to start an arc for both the SMAW and GTAW processes.

**When Lift-Arc is selected, start arc as follows:**

3 TIG Electrode

4 Workpiece

Touch tungsten electrode to workpiece at weld start point, enable output with torch trigger, foot control, or hand control. **Hold electrode to workpiece for 1-2 seconds**, and slowly lift electrode. An arc will form when electrode is lifted.

Shielding gas begins to flow when electrode touches work piece.

Normal open-circuit voltage is not present before tungsten electrode touches workpiece, only a low sensing voltage is present between electrode and workpiece. The solid state output contactor does not energize until after electrode is touching workpiece. This allows electrode to touch workpiece without overheating, sticking, or getting contaminated.

**Application:**

Lift-Arc is used for the DCEN GTAW process when HF Start method is not permitted, or to replace the scratch method.

**When HF Start is selected, start arc as follows:**

High frequency turns on to help start arc when output is enabled. High frequency turns off when arc is started, and turns on whenever arc is broken to help restart arc.

**Application:**

HF Start is used when the DCEN GTAW process is required.

**When HF Continuous is selected, start arc as follows:**

High frequency turns on when output is energized and remains on for duration of weld.

**Application:**

HF Continuous is used when the AC GTAW process is required.

Lit LED indicates selected mode.

When Output Selector switch position changes, LED may change position, based upon last selection.

Some start methods may not be available for all processes.

## 6-10. Balance/DIG Control

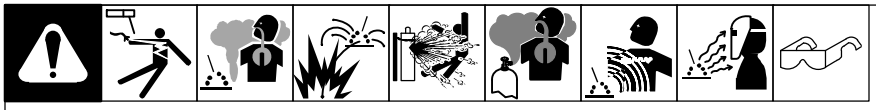

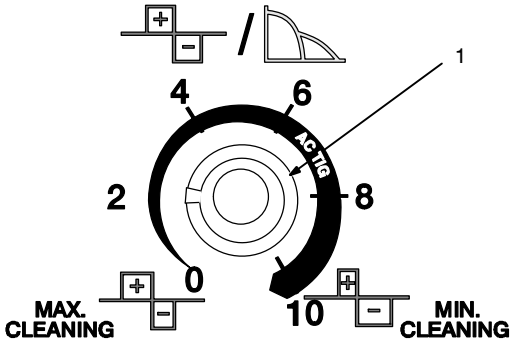


BALANCE/DIG

1. Balance/DIG Control

**Balance Control (AC GTAW):**

AC Balance controls the cleaning action. Increasing the balance setting reduces the oxide cleaning.

Adjusting balance: Set the balance level in the AC TIG zone. Make a test weld. If floating black specs appear in the welding puddle, balance is set too high. Turn balance down and repeat until puddle is clear.

**DIG Control (AC And DC SMAW):**

When set at 0, short-circuit amperage at low arc voltage is the same as normal welding amperage.

When setting is increased, short-circuit amperage at low arc voltage increases. Set control at 2 and adjust as necessary. Joint configuration, set-up, and process variables may affect setting.

**Application:**

Control helps arc starting or making vertical, or overhead welds by increasing amperage at low arc voltage, and reduces electrode sticking while welding.

**Balance Control Examples**

| Setting | Output Waveforms | Arc |
|---|---|---|
| Balanced<br>3 | 50% Electrode Positive<br>50% Electrode Negative | |
| Min Cleaning<br>10 | 32% Electrode Positive<br>68% Electrode Negative | |
| Max Cleaning<br>0 | 55% Electrode Positive<br>45% Electrode Negative | |

Ref. S-0795-A

## 6-11. Preflow Time Control

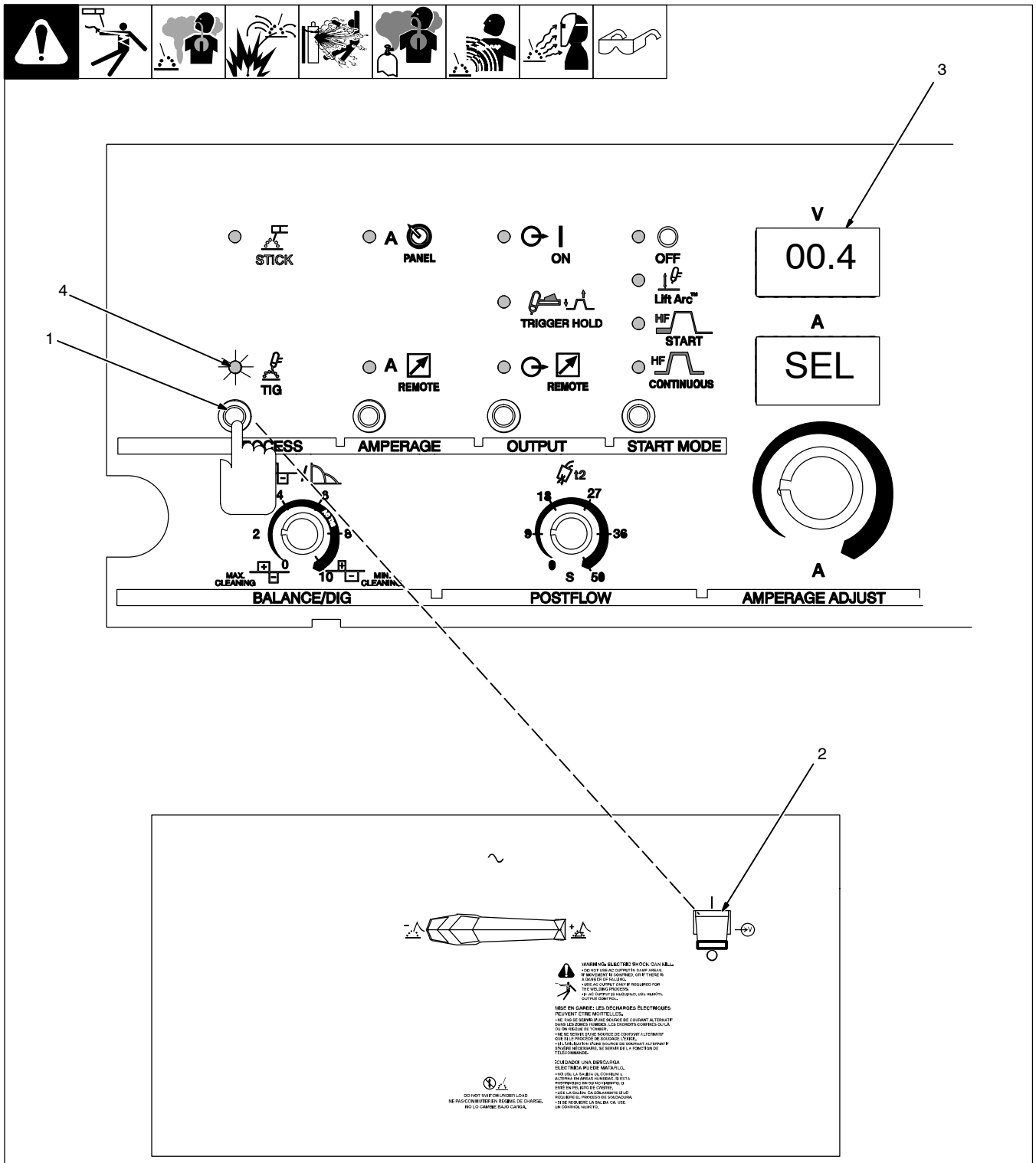


Use control to set length of time (0.2, 0.4, 0.6, 0.8, 1.0, 1.5, 2.0, 2.5, 3.0, 3.5, 4.0, 4.5, 5.0 seconds) gas flows before welding starts.

1. Process Control
2. Power Switch
3. Meters

To change preflow time, proceed as follows:

Turn power off. Push and hold Process Control button and turn On power. Hold button for approximately 7 seconds (or until software version number_ _ _ _ _ _-_ clears meters).

4. TIG LED

The TIG LED will light and the meters will display [o.4] [SEL]. The factory preflow default setting is 0.4 seconds. To change preflow time, press and release Process Control button until desired time is displayed on meters.

**Application:**

Preflow is used to purge the immediate weld area of atmosphere. Preflow also aids in consistent arc starting.

## 6-12. Pulse Controls (Standard On 350 LX Models, Optional On 250 DX Models)

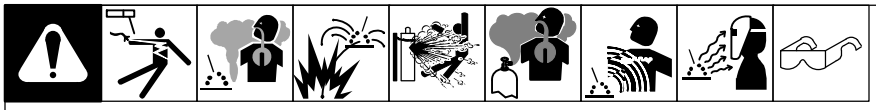

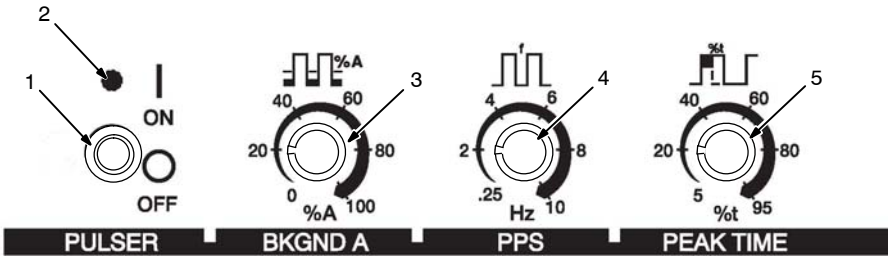


6

| Percent (%) Peak Time Control Setting | Pulsed Output Waveforms |
|---|---|
| Balanced (50%) | PPS; Bkg Amp; Peak Amp |
| More Time At Peak Amperage (80%) | |
| More Time At Background Amperage (20%) | |

1. On/Off Control

Use control to turn pulse function On and Off.

2. Pulser ON LED

LED is lit when pulser function is enabled.

3. Background Amps

Use Background Amps control to set the low pulse of the weld amperage, which cools the weld puddle and affects overall heat input. Background Amps is set as a percentage of peak amperage.

4. Pulse Frequency

Ranges from 0.25–10.0 pps (pulses per second). Control is used to determine appearance of weld bead.

5. Peak Time

A range of 5–95% of each pulse cycle can be spent at the peak amperage level.

Peak amperage (3-310 amps for 250 DX models, and 3–400 amps for 350 LX models), is set with the Amperage Adjustment control (see Section 6-1). Peak amperage is the highest welding amperage allowed to occur in the pulse cycle. Weld penetration varies directly with peak amperage.

6. Pulsed Output Waveforms

Example shows affect changing the Peak Time control has on the pulsed output waveform.

**Application:**

Pulsing refers to the alternating raising and lowering of the weld output at a specific rate. The raised portions of the weld output are controlled in width, height, and frequency, forming pulses of weld output. These pulses and the lower amperage level between them (called the background amperage) alternately heat and cool the molten weld puddle. The combined effect gives the operator better control of penetration, bead width, crowning, undercutting, and heat input. Controls can be adjusted while welding.

Pulsing can also be used for filler material addition technique training.

## 6-13. Sequence Controls (Optional)

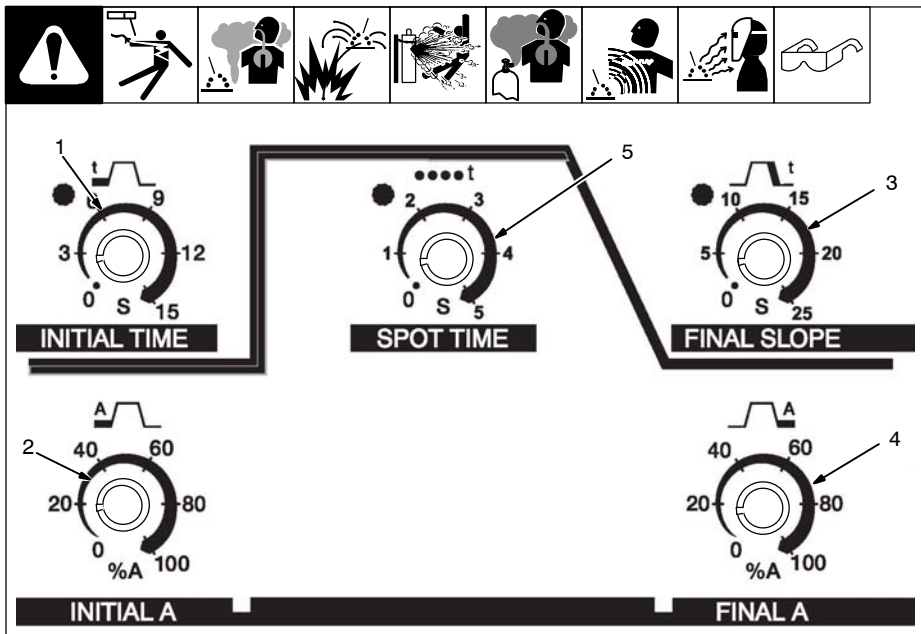


1. Initial Time Control

See Section 6-14.

2. Initial Amperage Control

See Section 6-14.

3 Final Slope Control

See Section 6-15.

4. Final Amperage Control

See Section 6-15.

5. Spot Time Control

See Section 6-16.

## 6-14. Initial Time Control And Initial Amperage Control

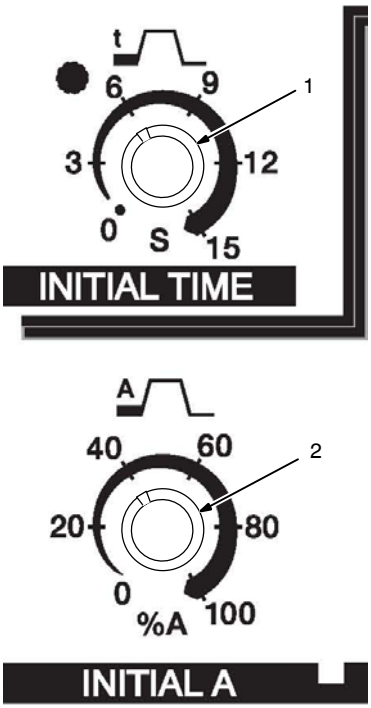


1. Initial Time Control

Indicator light is on when Initial Time control function is active.

Initial Sequence control function is inactive when Spot Time function is active.

Use control to select 0–15 seconds of start time.

2. Initial Amperage Control

Indicator Light is on when Initial Sequence control function is active.

Initial Amperage control function is inactive when Spot Time function is active.

Use control to select a starting amperage (3–400 amps) that is different from the weld amperage. Initial Amperage can be used with or without a remote control (Initial Amperage and Initial Time control settings will override a remote control device).

**Application:**

Initial Amperage can be used while GTAW welding to assist in preheating cold material prior to depositing filler material, or to ensure a soft start. Initial Amperage can also be used for SMAW to ensure a more consistent arc strike.

Function is enabled, when LED is lit.

## 6-15. Final Slope Control And Final Amperage Control

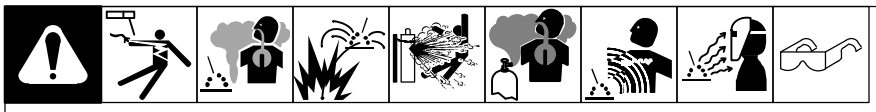

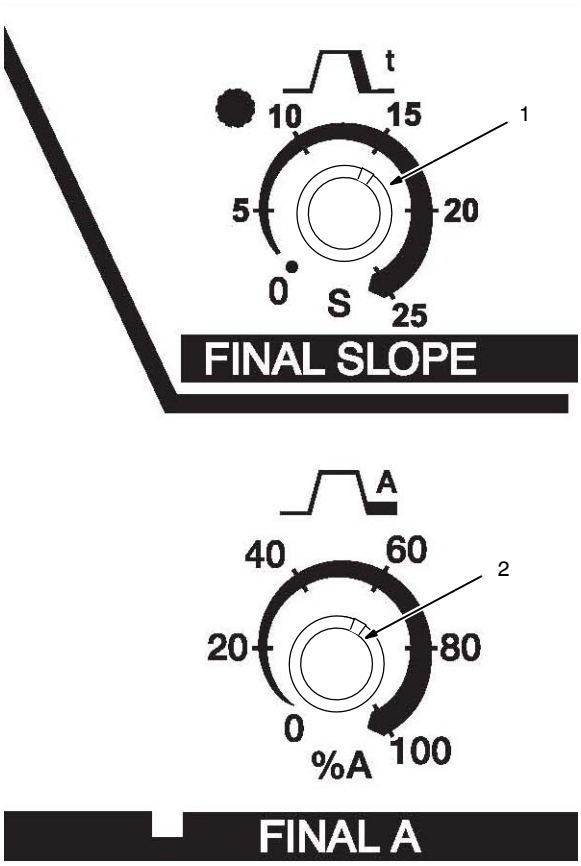


1. Final Slope Control

Indicator light is on when Final Slope control function is active.

Final Slope control function is inactive when Spot Time function is active.

Use control to reduce amperage over a set period of time (0–15 seconds) at the end of the weld cycle when NOT using a remote current control.

2. Final Amperage Control

Indicator light is on when Final Amperage control function is active.

Final Amperage control function is inactive when Spot Time function is active (see Section 6-16).

Final amperage is the amperage to which weld amperage has sloped down to (0–100% of amperage set on Amperage Adjust control).

**Application:**

Final Slope should be used while GTAW welding materials that are crack sensitive, and/or the operator wants to eliminate the crater at the end of the weld.

This applies if the operator is using an on/off only type control to start and stop the welding process.

Do not use this function with a foot or finger amperage control.

Function is enabled, when LED is lit.

## 6-16. Spot Time Control

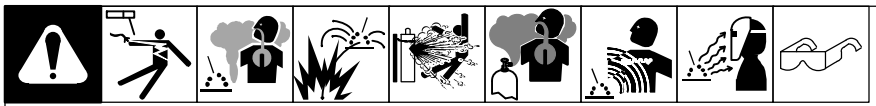

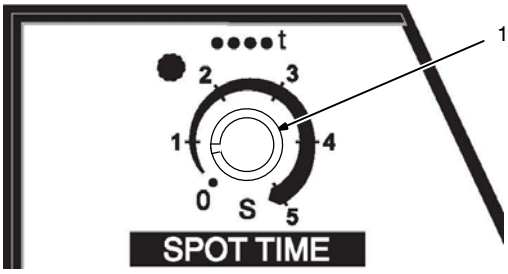


1. Spot Time Control

Indicator light is on when Spot Time function is active. When Spot Time function is active, Initial Time, Initial Amperage, Final Slope, and Final Amperage functions are inactive (see Section 6-13).

Used with the (GTAW) TIG Spot process, generally with a direct current electrode negative (DCEN) set-up.

Use control to select 0–15 seconds of spot time.

Use Amperage Adjust control (see Section 6-1) to set amperage.

**Application:**

TIG spot welding is used for joining thinner materials that are in close contact with the fusion method. A good example would be joining coil ends.

Function is enabled, when LED is lit.

## 6-17. Timer/Cycle Counter

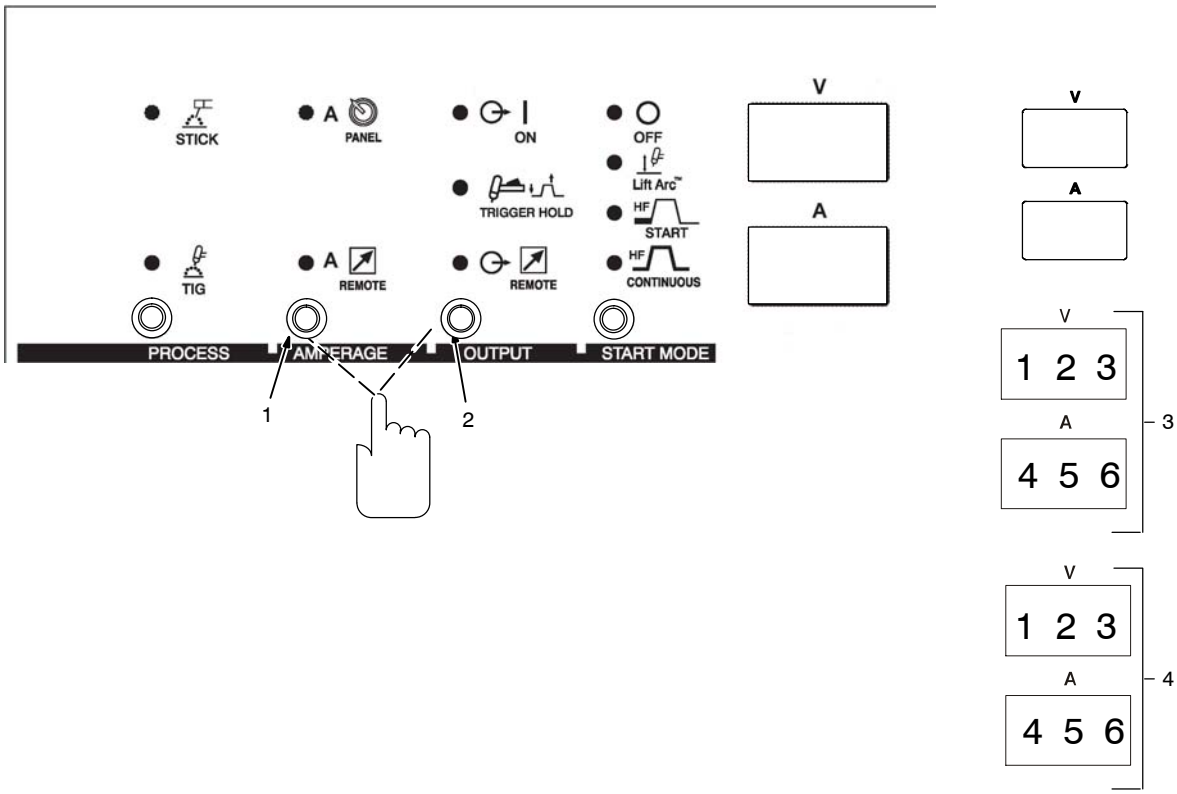


1. Amperage Control
2. Output Control (Contactor)

To read timer/cycle counter, hold Amperage and Output (contactor) buttons while turning on power. When machine first powers up, the displays will show the software number and revision for the first seven seconds. It will then show arc time and cycle count.

3. Timer Display

The hours and minutes are displayed on the volt and amp meters for the first five seconds, and are read as 1, 234 hours and 56 minutes.

4. Cycle Display

The cycles are displayed on the volt and amp meters for the next five seconds, and are read as 123, 456 cycles.

## 6-18. Resetting Unit To Factory Default Settings (All Models)

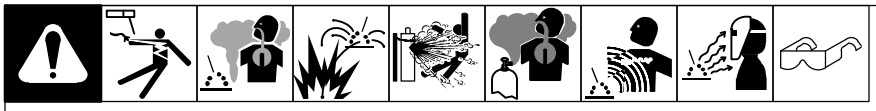

1. Process Control
2. Amperage Control
3. Output Control
4. Start Control
5. Power Switch

To reset all welding power source functions to original factory settings, turn power off. Push and hold the Process, Amperage, Output, and Start controls and turn On power. Hold switch pads for approximately 7 seconds (or until software version number _ _ _ _ _ _-_clears meters).

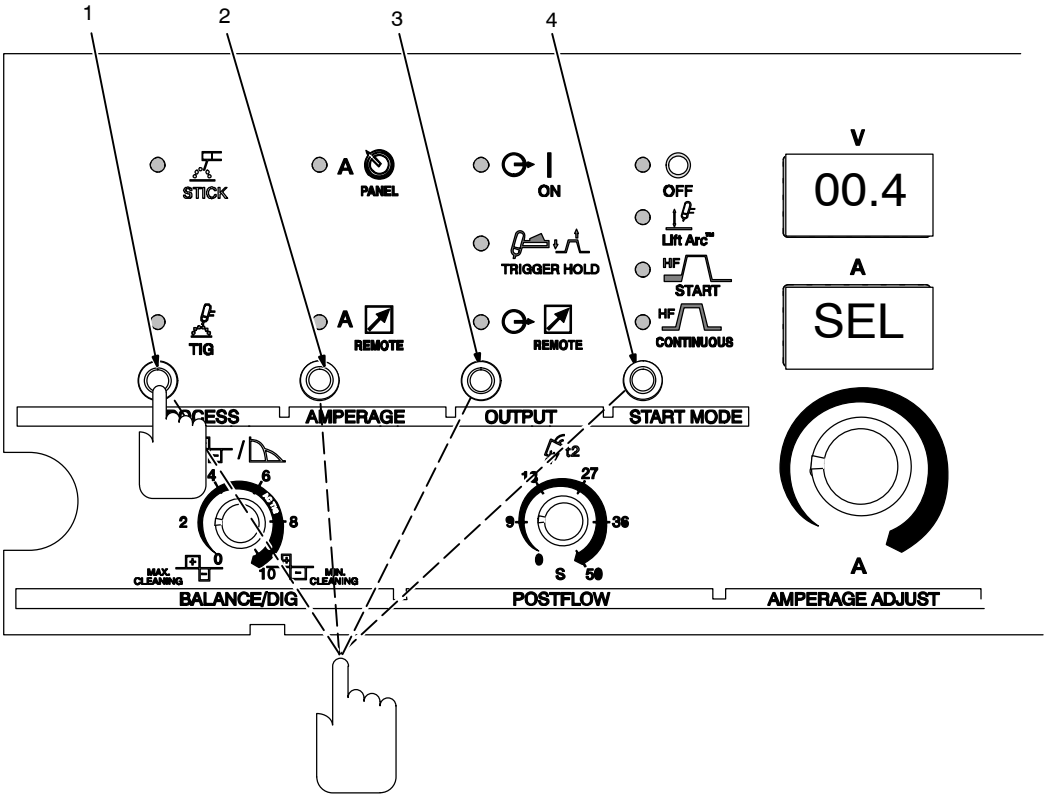


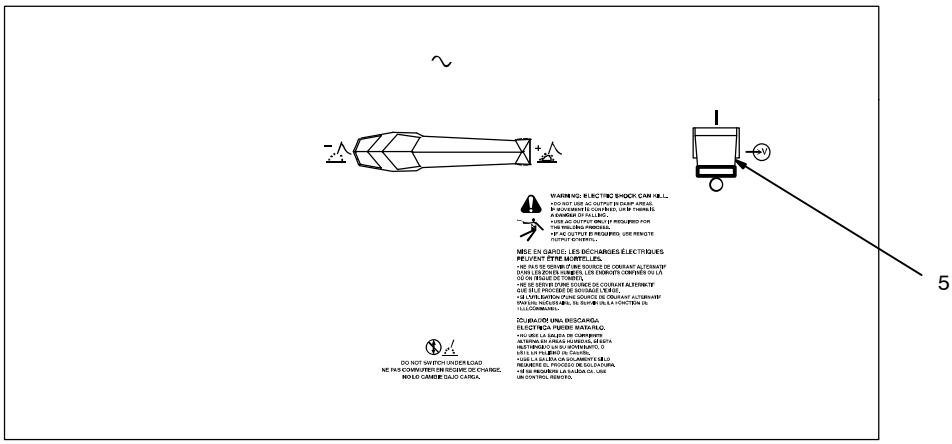

# SECTION 7 – MAINTENANCE

## 7-1. Routine Welding Power Source Maintenance

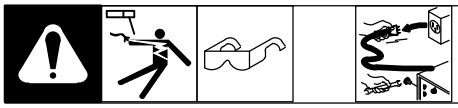

**Disconnect power before maintaining.**

☞ *Maintain more often during severe conditions.*

| | |
|---|---|
| | ✓ = Check ◇ = Change ● = Clean Δ = Repair ☆ = Replace<br>* To be done by Factory Authorized Service Agent |
| Every 3 Months | ✓☆ Labels<br> ✓ ☆ Gas Hoses<br> 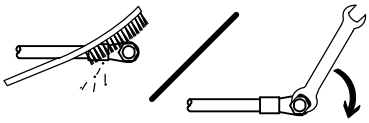 ● Weld Terminals |
| Every 3 Months | 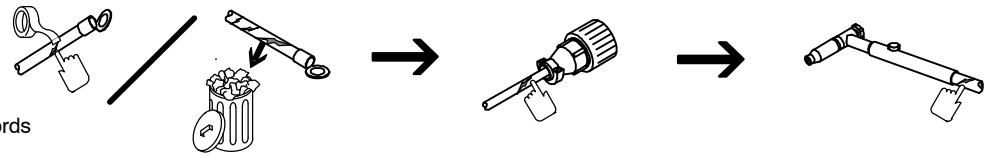 ✓Δ ☆Cables And Cords |
| Every 6 Months | 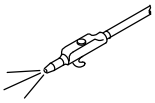 ● Durning heavy service, clean monthly.<br> 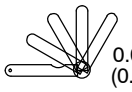 0.008 in. (0.203 mm)<br>* Adjust or clean spark gap<br> 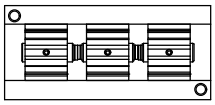 |

## 7-2. Supplementary Protector CB1

**Turn off power before resetting breaker.**

1. Supplementary Protector CB1

If CB1 opens, high frequency and output to the 115 volts AC duplex receptacle stop. Press button to reset CB1.

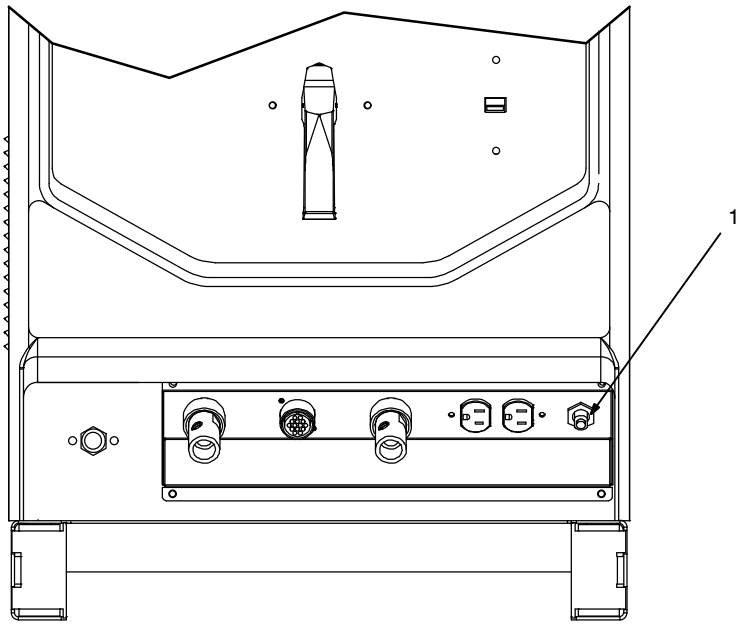


Ref. 803588-B

## 7-3. Adjusting Spark Gaps

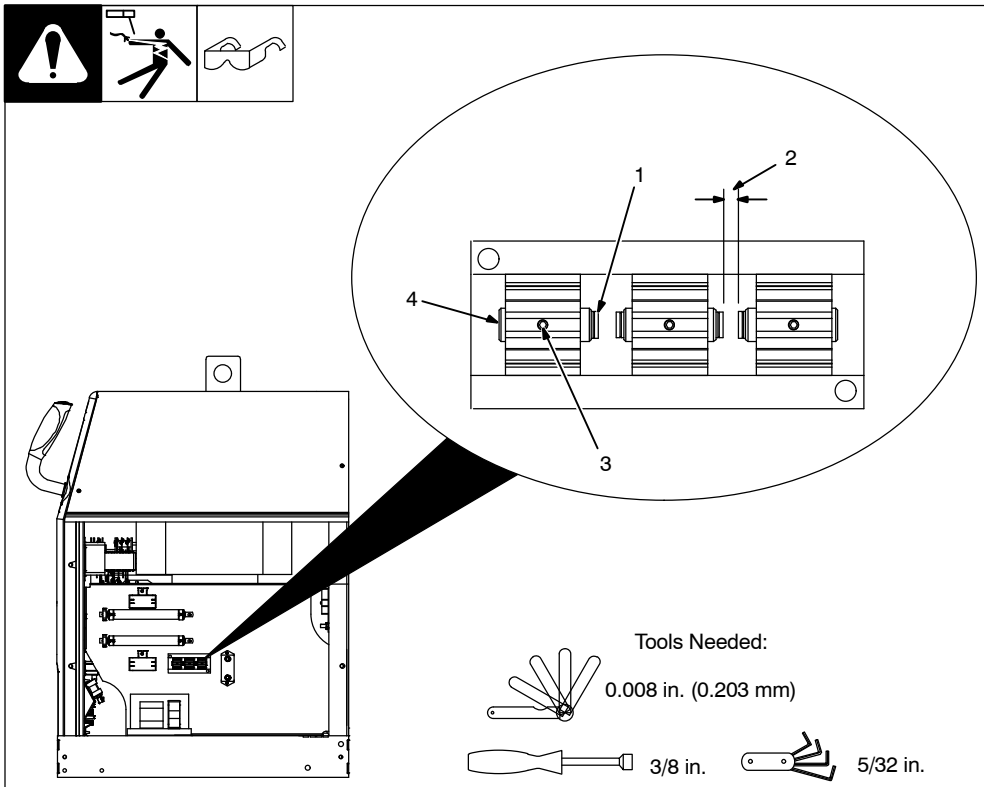


**Turn Off welding power source and disconnect and lockout/tagout input power before adjusting spark gaps.**

Remove right side panel..

1. Tungsten End Of Point

Replace point if tungsten end disappears; do not clean or dress tungsten.

2. Spark Gap

Normal spark gap is 0.008 in (0.203 mm).

If adjustment is needed, proceed as follows:

3. Adjustment Screws

Loosen screws. Place gauge of proper thickness in spark gap.

4. Pressure Point

Apply slight pressure at point until gauge is held firmly in gap. Tighten screws. Adjust other gap.

Reinstall right side panel.

## 7-4. Routine Maintenance For Optional Cooler

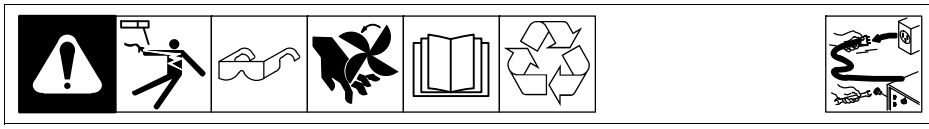

**Disconnect power before maintaining.**

| | ✓ = Check ◇ = Change ◯ = Clean Δ = Repair ☆ = Replace<br>* To be done by Factory Authorized Service Agent | | |
|---|---|---|---|
| Every Month | ***NOTICE – Clean coolant strainer.*** *Severe conditions may require more frequent cleaning (continuous use, high/low temperatures, dirty environment, etc.).* ***Failure to properly clean coolant strainer voids pump warranty.***<br>◯ Coolant Strainer | | ◯ Heat Exchanger Fins |
| Every Six Months | ☆ Unreadable Labels | ✓ ☆ Cracked Hoses | ◇ Change Coolant If Using Water (See Section 7-5) |
| Every Twelve Months | ◇ Change Coolant (If Using Miller Coolant) (See Section 7-5) | | |

## 7-5. Coolant Maintenance

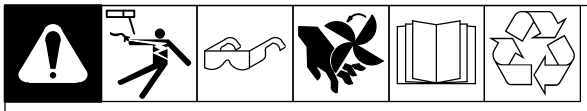

**Disconnect power before maintaining.**

1. Coolant Filter

Unscrew housing to clean filter.

Changing coolant: Drain coolant by tipping unit forward. Fill with clean water and run for 10 minutes. Drain and refill.

***NOTICE*** *– If replacing hoses, use hoses compatible with ethylene glycol, such as Buna-n, Neoprene, or Hypalon. Oxy-acetylene hoses are not compatible with any product containing ethylene glycol.*

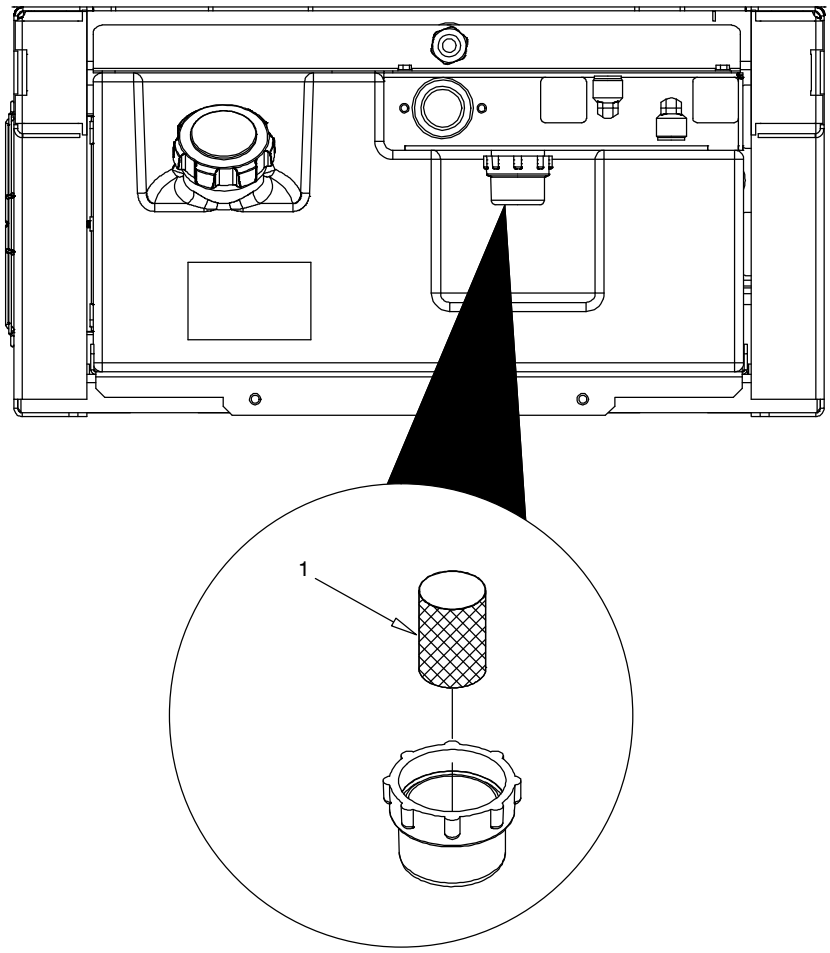


805516-A

| Application | GTAW Or Where HF* Is Used |
|---|---|
| 3-1/2 Gal Coolant | Low Conductivity Coolant No. 043810**; Distilled Or Deionized Water OK Above 32° F (0° C) |

*HF: High Frequency Current

**Coolant 043810, a 50/50 solution, protect to -37° F (-38°C) and resist algae growth.

***NOTICE*** *– Use of any coolant other than those listed in the table voids the warranty on any parts that come in contact with the coolant (pump, radiator, etc.)*

# SECTION 8 – TROUBLESHOOTING

## 8-1. Voltmeter/Ammeter Help Displays

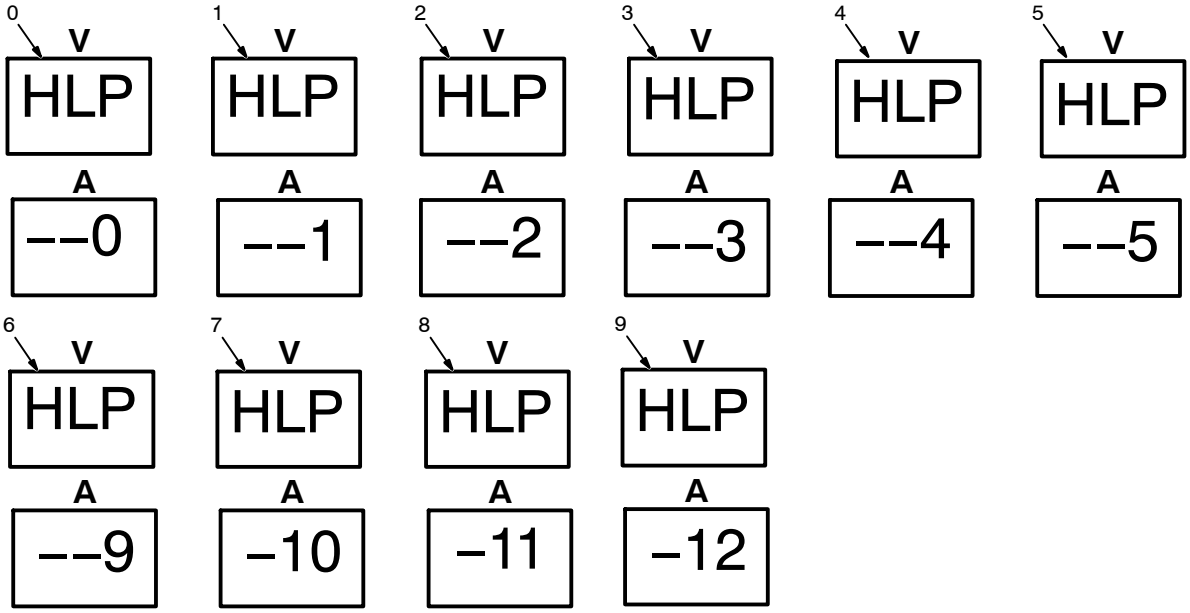


☞ *All directions are in reference to the front of the unit. All circuitry referred to is located inside the unit.*

0. Help 0 Display

Indicates a short in the thermal protection circuitry located on the transformer/stabilizer of the unit.

1. Help1 Display

An SCR overcurrent or undercurrent condition has occurred. Turn power off and back on to correct condition.

2. Help 2 Display

Indicates an open in the thermal protection circuitry located on the transformer/stabilizer of the unit.

3. Help 3 Display

Indicates the transformer/stabilizer of the unit has overheated. The unit has shut down to allow the fan to cool it (see Section 4-7). Operation will continue when the unit has cooled.

4. Help 4 Display

Indicates an open in the thermal protection circuitry located on the rectifier assembly of the unit.

5. Help 5 Display

Rectifier assembly has overheated. The unit has shut down to allow the fan to cool unit (see Section 4-7). Operation will continue when the unit has cooled.

6. Help 9 Display

Indicates a short in the thermal protection circuitry located on the rectifier assembly of the unit.

7. Help 10 Display

Indicates Remote Output control is activated. Release Remote Output control to clear help message.

8. Help 11 Display

Output Selector switch is not in correct position (see Section 6-2).

9. Help 12 Display

Indicates a non-allowable set-up of the front panel.

## 8-2. Troubleshooting The Welding Power Source

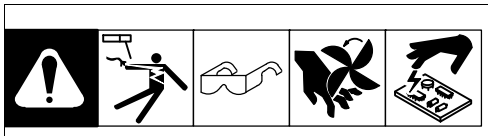

***NOTICE*** – *The remedies listed below are recommendations only. If these remedies do not fix the trouble with your unit, have a Factory Authorized Service Agent check unit. There are no user serviceable parts inside unit.*

Refer to Section 8-1 for any Help (HLP) message displayed on voltmeter/ammeter.

| Trouble | Remedy |
|---|---|
| No weld output; unit completely inoperative. | Place line disconnect switch in On position (see Section 5-16). |
| | Check and replace line fuse(s), if necessary (see Section 5-16). |
| | Check for proper input power connections (see Section 5-16). |
| | Check for proper jumper link position (see Section 5-15). |
| No weld output; unit on. | If using remote control, place Output control in Remote 14 position, and make sure remote control is connected to Remote 14 receptacle. If remote is not being used, place Output control in On position (see Section 6-1). |
| | Check, repair, or replace remote control. |
| | Have Factory Authorized Service Agent check unit. |
| Unit provides only maximum or minimum weld output. | Make sure Amperage control is in proper position (see Section 6-1). |
| | Have Factory Authorized Service Agent check unit. |
| Erratic or improper weld output. | Use proper size and type of weld cable (see Section 5-2). |
| | Clean and tighten all weld connections. |
| | Check position of Output Selector control (see Section Figure 6-1). |
| | If using remote control, check position of Amperage Adjustment control (see Section 6-1). |
| No control of weld output. | If using remote control, place Output control in Remote 14 position, and make sure remote control is connected to Remote 14 receptacle. If remote is not being used, place Output control in On position (see Section 6-1). |
| | Make sure Amperage control is in proper position (see Section 6-1). |
| No output from cooler receptacle RC2 and no high frequency. | Reset circuit breaker CB1 (see Section 7-2). |
| Lack of high frequency; difficulty in starting GTAW arc. | Reset circuit breaker CB1 (see Section 7-2). |
| | Select proper size tungsten (see Section 12). |
| | Be sure torch cable is not close to any grounded metal. |
| | Check cables and torch for cracked insulation or bad connections. Repair or replace. |
| | Check spark gaps (see Section 7-3). |
| Wandering arc – poor control of direction of arc. | Reduce gas flow rate. |
| | Select proper size tungsten (see Section 12). |
| | Properly prepare tungsten (see Section 12). |
| Tungsten electrode oxidizing and not remaining bright after conclusion of weld. | Shield weld zone from drafts. |
| | Increase postflow time. |
| | Check and tighten all gas fittings. |
| | Properly prepare tungsten. |
| | Check for water in torch, and repair torch if necessary. |
| Fan not operating. | Unit equipped with Fan-On-Demand™. Fans run only when necessary. Unit equipped with circuitry to protect against overheating. |

## 8-3. Troubleshooting The Optional Cooler

| Trouble | Remedy |
|---|---|
| Coolant system does not work. | Be sure input power cord is plugged in to energized receptacle. |
| | Check line fuses or circuit breaker, and replace or reset if necessary. |
| | Motor overheated. Unit starts running when motor has cooled. |
| | Have Factory Authorized Service Agent check motor. |
| Decreased or no coolant flow. | Add coolant. |
| | Check for clogged hoses or coolant filter. |
| | Disconnect pump, and check for sheared coupling. Replace coupling if necessary. |

# SECTION 9 – PARTS LIST

## 9-1. Recommended Spare Parts

| Dia. Mkgs. | Part No. | Description | Quantity Model 250 DX | 350 LX |
|---|---|---|---|---|
| | | **Recommended Spare Parts** | | |
| | 221736 | Points, Spark Gap (Dual) | 1 | 1 |
| | 221737 | Points, Spark Gap (Single) | 2 | 2 |
| | 239494 | Screen, Filter Lp Cyl 100x100x0.0045 SST (For Optional Cooler) | 1 | 1 |

**To maintain the factory original performance of your equipment, use only Manufacturer's Suggested Replacement Parts. Model and serial number required when ordering parts from your local distributor.**

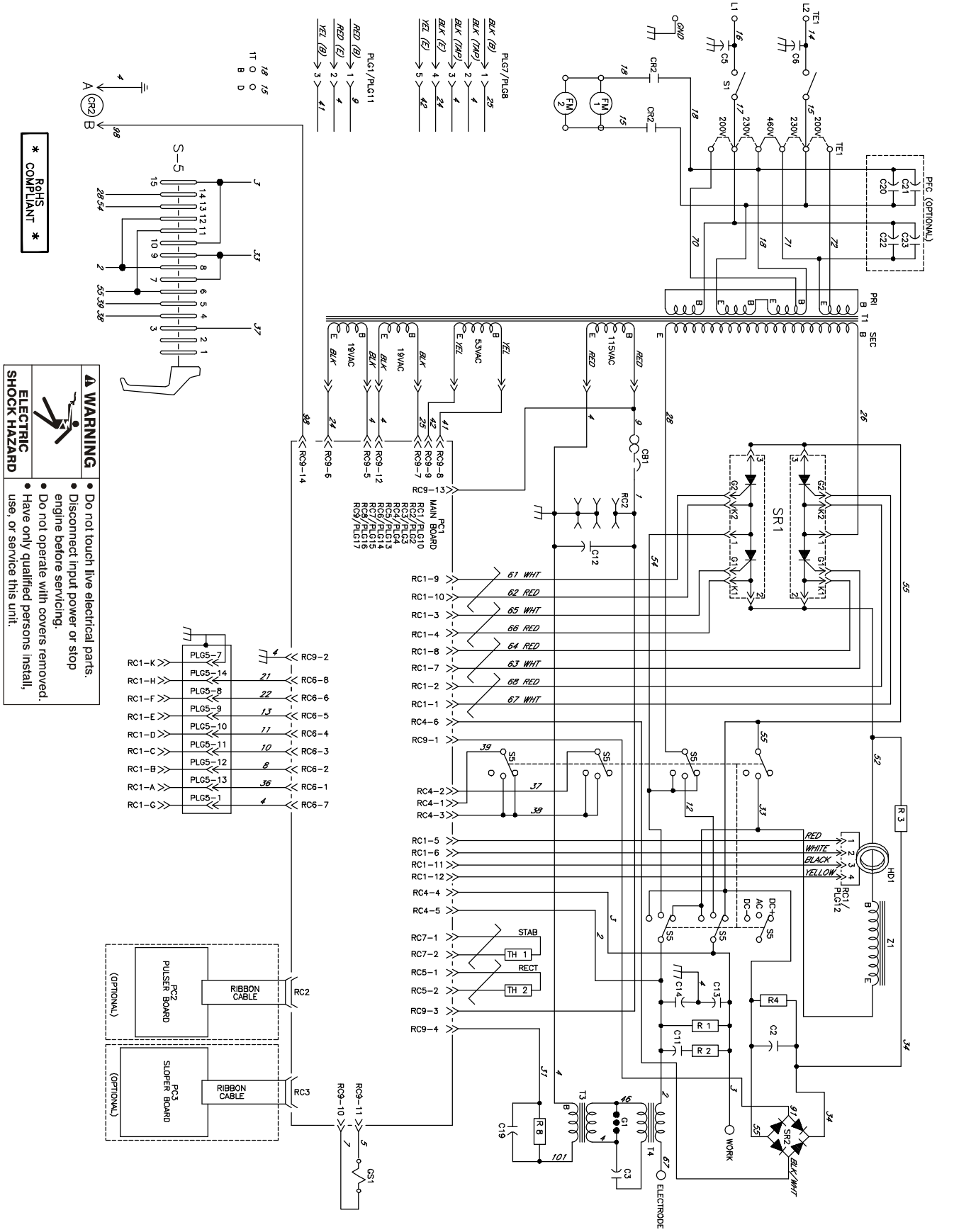


Figure 10-1. Circuit Diagram For 250 DX Models (200/230/460 Volt Input)

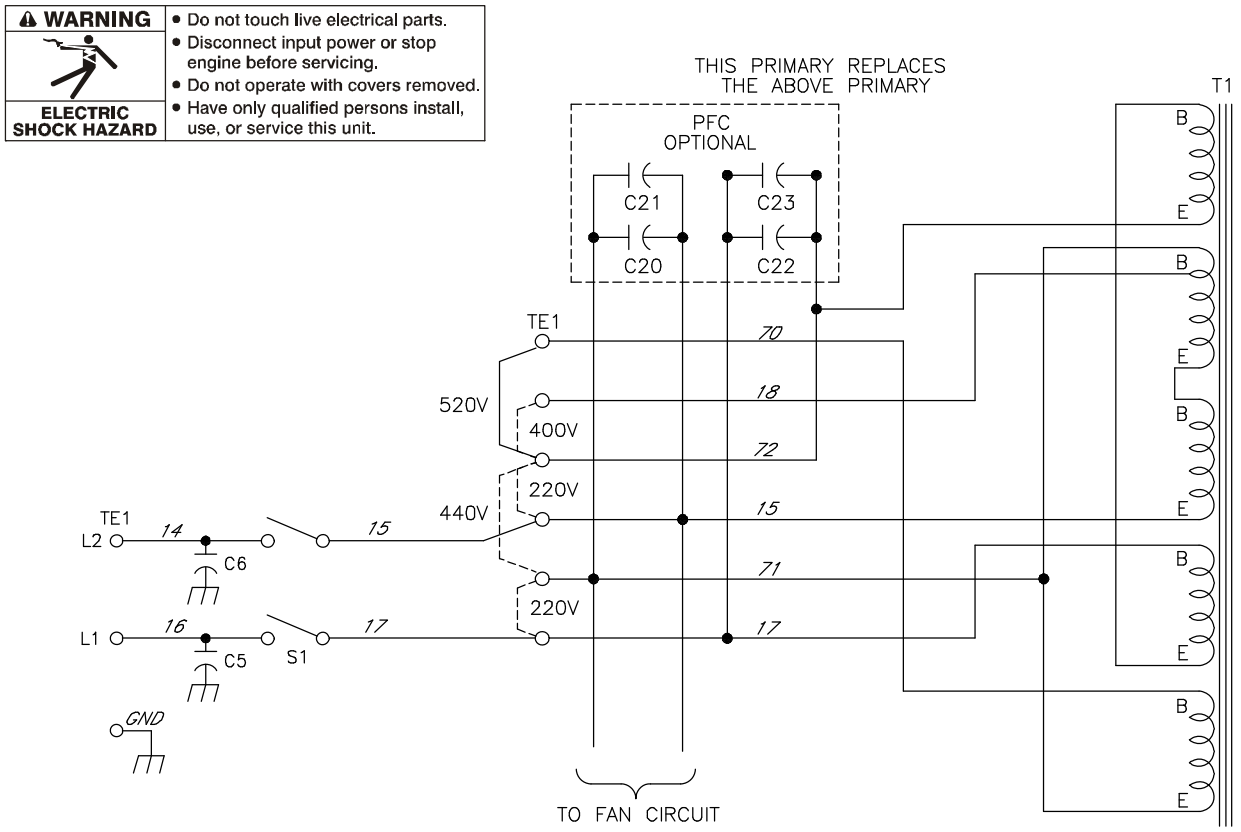


**Figure 10-2. Circuit Diagram For 250 DX Models (220/400/440/520 Volt Input)**

191426-B

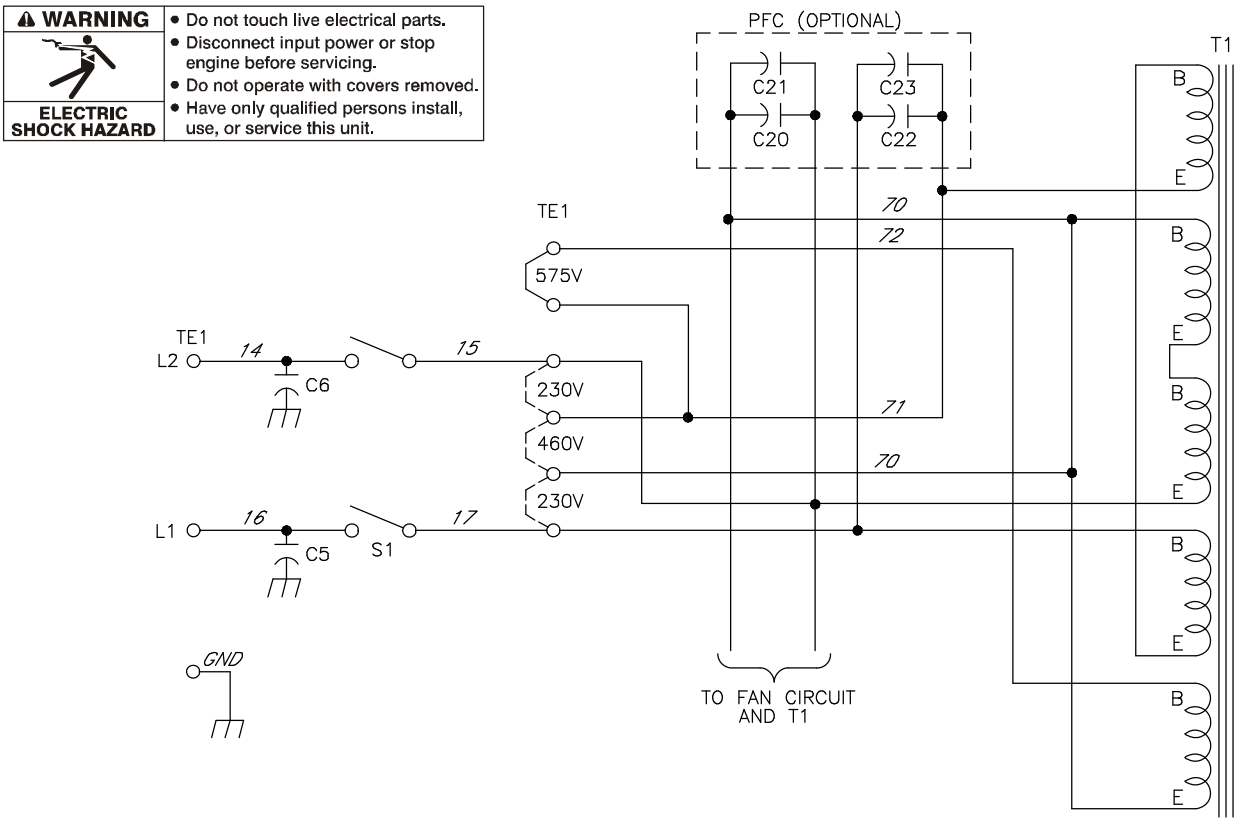


**Figure 10-3. Circuit Diagram For 250 DX Models (230/460/575 Volt Input)**

198499

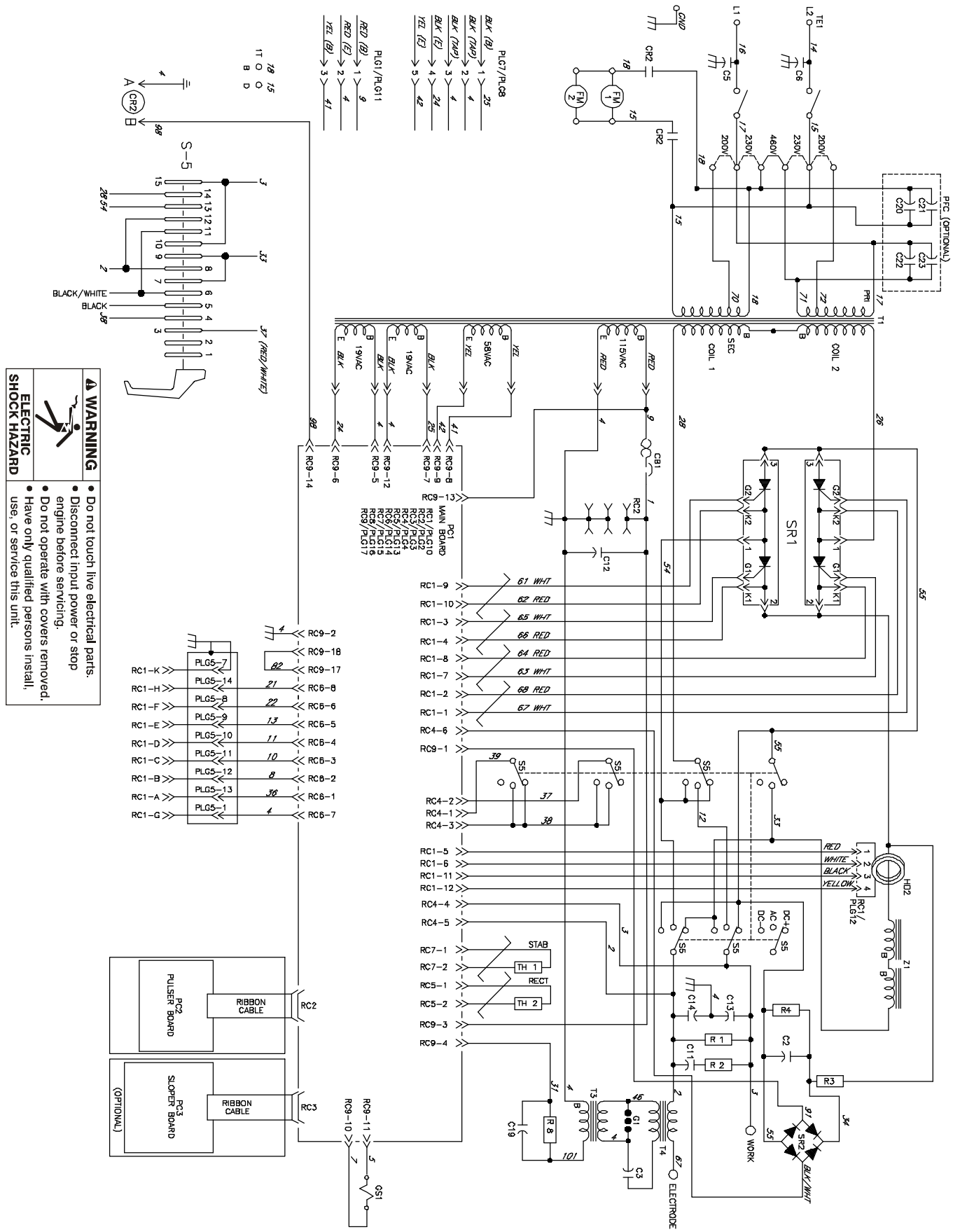


**Figure 10-4. Circuit Diagram For 350 LX Models (200/230/460 Volt Input)**

231395-B

| ⚠ WARNING | • Do not touch live electrical parts.<br>• Disconnect input power or stop engine before servicing.<br>• Do not operate with covers removed.<br>• Have only qualified persons install, use, or service this unit. |
|---|---|
| ELECTRIC SHOCK HAZARD | |

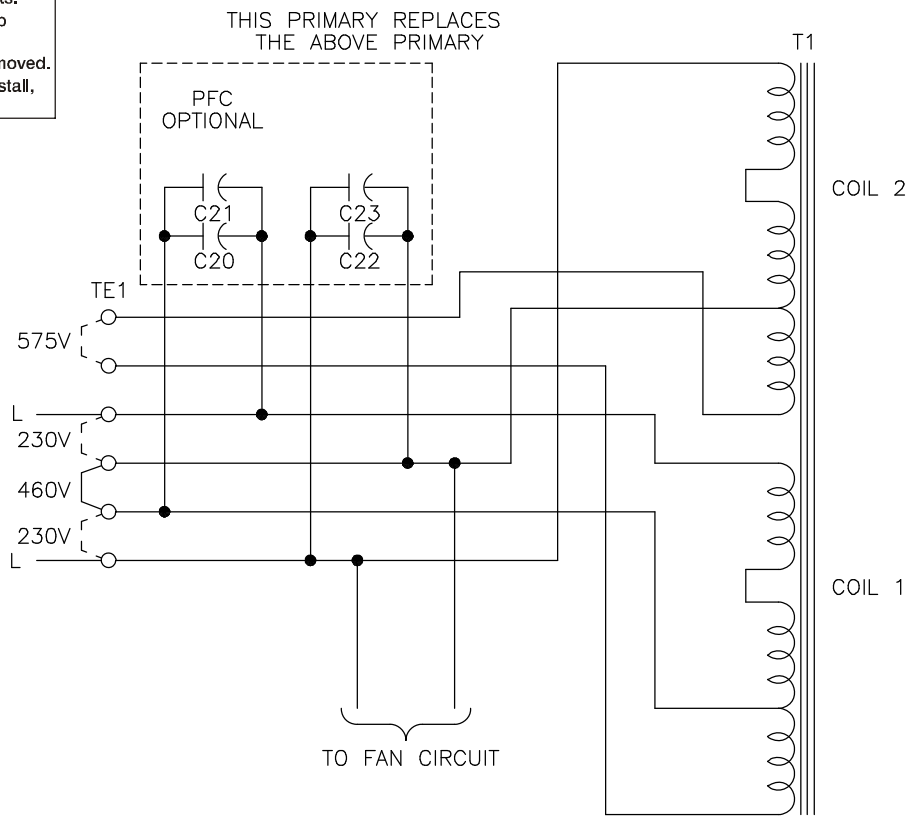


**Figure 10-5. Circuit Diagram For 350 LX Models (230/460/575 Volt Input)**

165978-E

| ⚠ WARNING | • Do not touch live electrical parts.<br>• Disconnect input power or stop engine before servicing.<br>• Do not operate with covers removed.<br>• Have only qualified persons install, use, or service this unit. |
|---|---|
| ELECTRIC SHOCK HAZARD | |

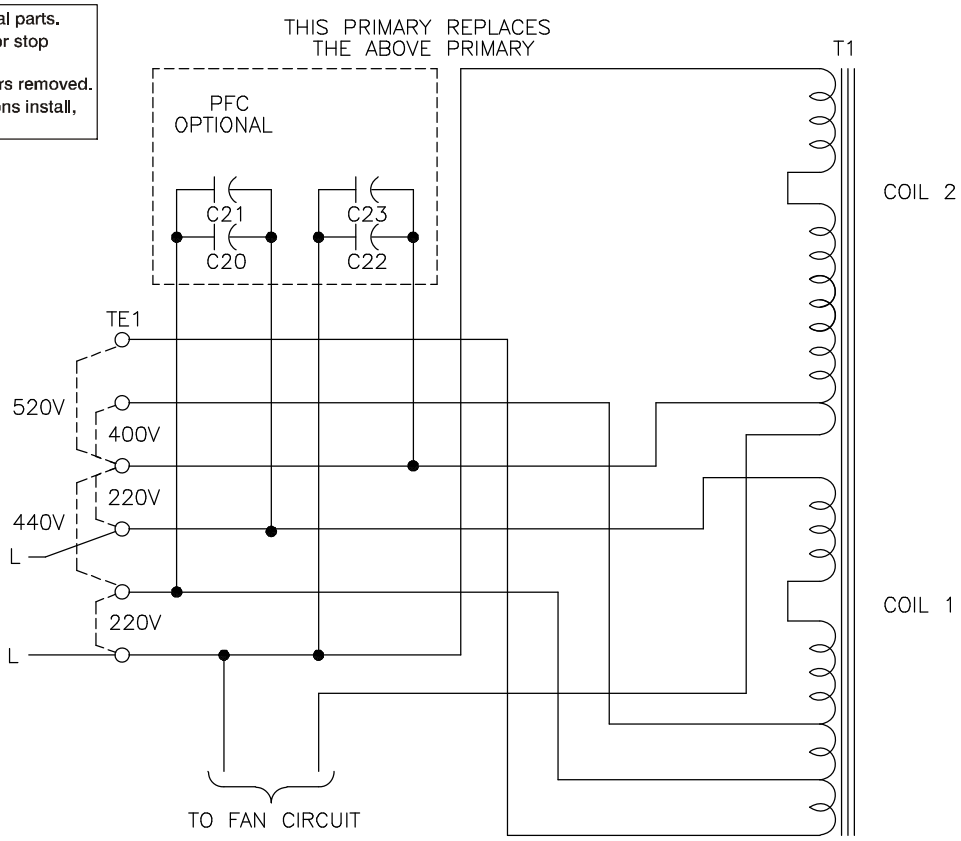


**Figure 10-6. Circuit Diagram For 350 LX Models (220/400/440/520 Volt Input)**

202627-B

| ⚠ WARNING | • Do not touch live electrical parts.<br>• Disconnect input power or stop engine before servicing.<br>• Do not operate with covers removed.<br>• Have only qualified persons install, use, or service this unit. |
|---|---|
| ELECTRIC SHOCK HAZARD | |

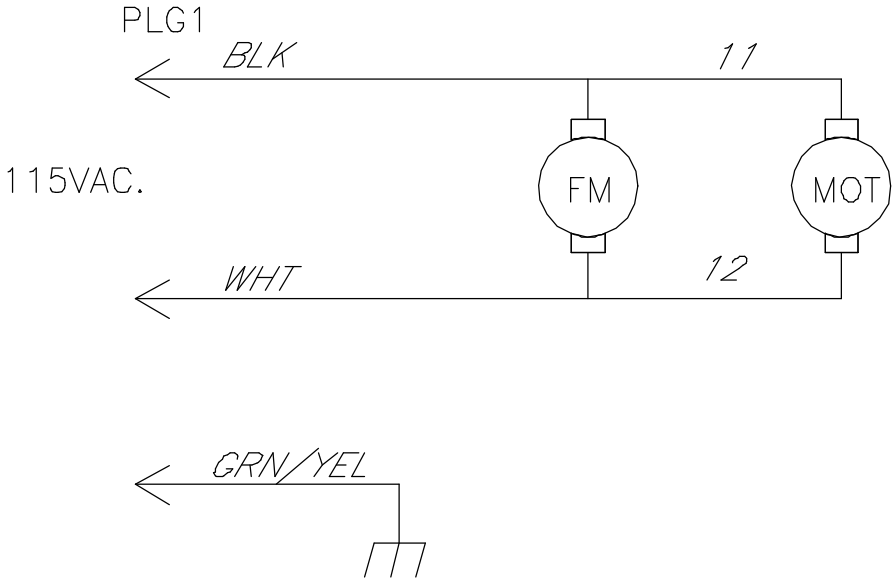


225650-A

**Figure 10-7. Circuit Diagram For Optional Cooler**

## 11-1. Welding Processes Requiring High Frequency

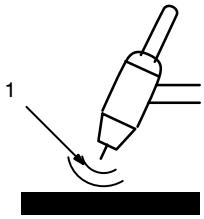


1. High-Frequency Voltage

TIG – helps arc jump air gap between torch and workpiece and/ or stabilize the arc.

high_freq 2018-01

## 11-2. Installation Showing Possible Sources Of HF Interference

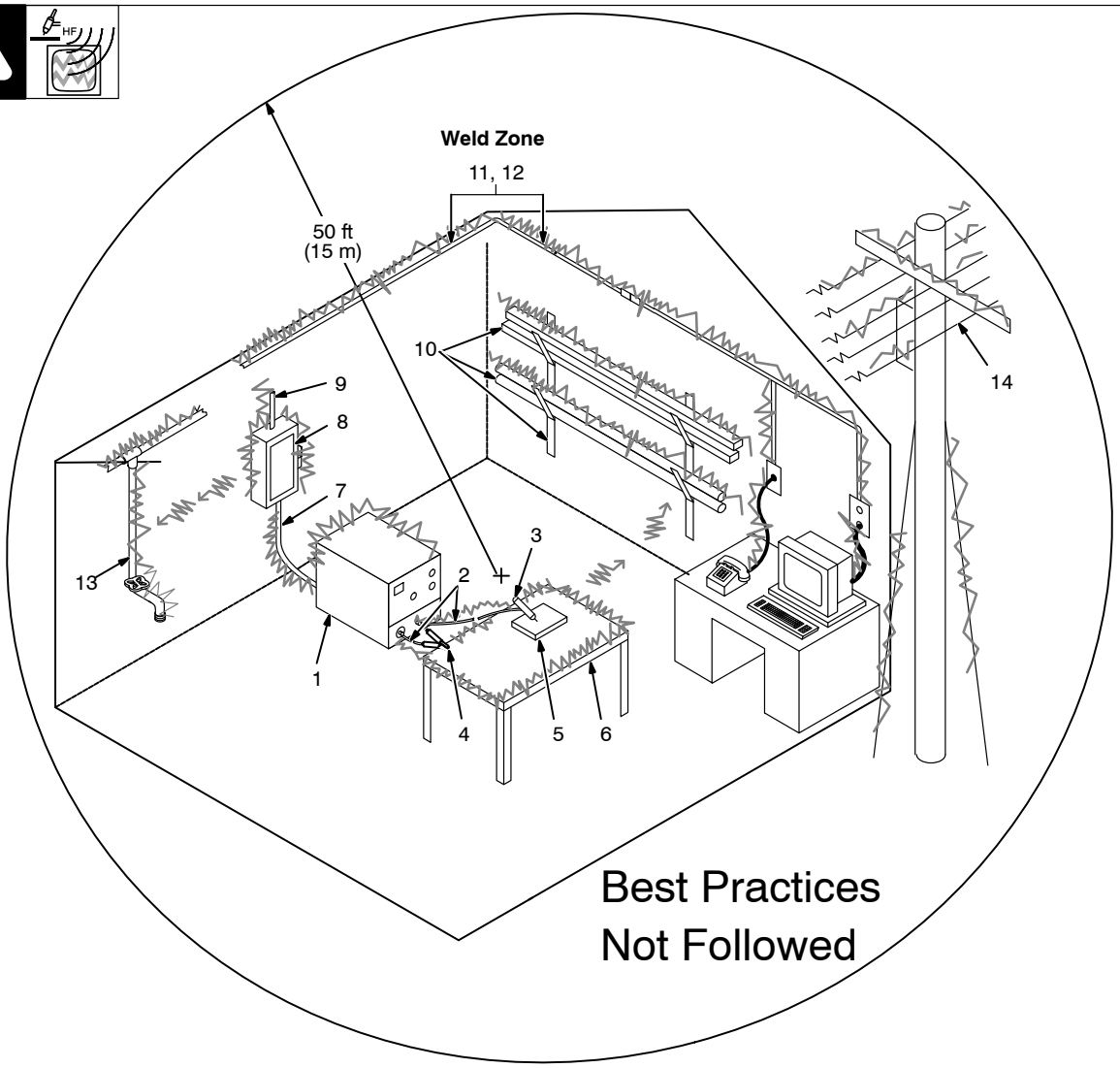


**Sources of Direct High-Frequency Radiation**

1. High-Frequency Source (welding power source with built-in HF or separate HF unit)
2. Weld Cables
3. Torch
4. Work Clamp
5. Workpiece
6. Work Table

**Sources of Conduction of High Frequency**

7. Input Power Cable
8. Line Disconnect Device
9. Input Supply Wiring

**Sources of Reradiation of High Frequency**

10. Ungrounded Metal Objects
11. Lighting
12. Wiring
13. Water Pipes and Fixtures
14. External Phone and Power Lines

S-0694

## 11-3. Recommended Installation To Reduce HF Interference

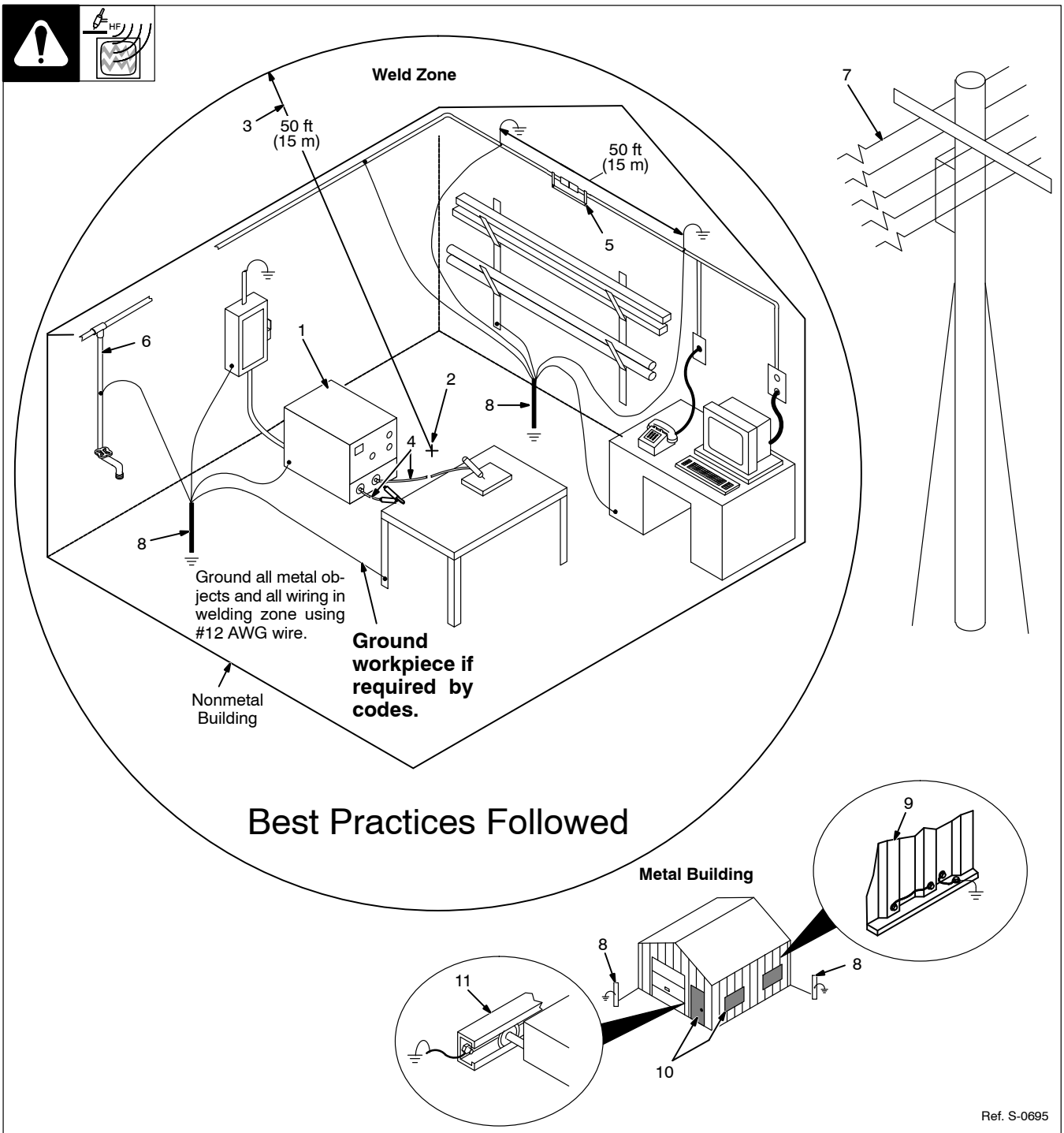


Ref. S-0695

1. High-Frequency Source (welding power source with built-in HF or separate HF unit)

Ground metal machine case (clean paint from around hole in case, and use case screw), work output terminal, line disconnect device, input supply, and worktable.

2. Center Point of Welding Zone

Midpoint between high-frequency source and welding torch.

3. Welding Zone

A circle 50 ft (15 m) from center point in all directions.

4. Weld Output Cables

Keep cables short and close together.

5. Conduit Joint Bonding and Grounding

Electrically join (bond) all conduit sections using copper straps or braided wire. Ground conduit every 50 ft (15 m).

6. Water Pipes and Fixtures

Ground water pipes every 50 ft (15 m).

7. External Power or Telephone Lines

Locate high-frequency source at least 50 ft (15 m) away from power and phone lines.

8. Grounding Rod

Consult the National Electrical Code for specifications.

**Metal Building Requirements**

9. Metal Building Panel Bonding Methods

Bolt or weld building panels together, install copper straps or braided wire across seams, and ground frame.

10. Windows and Doorways

Cover all windows and doorways with grounded copper screen of not more than 1/4 in (6.4 mm) mesh.

11. Overhead Door Track

Ground the track.

# SECTION 12 – SELECTING AND PREPARING A TUNGSTEN FOR DC OR AC PHASE MACHINE WELDING

gtaw_Phase_2018–01

**Whenever possible and practical, use DC weld output instead of AC weld output.**

## 12-1. Selecting Tungsten Electrode (Wear Clean Gloves To Prevent Contamination Of Tungsten)

### A. Select Tungsten Electrode

☞ *Not all tungsten electrode manufacturers use the same colors to identify tungsten type. Contact the tungsten electrode manufacturer or reference the product packaging to identify the tungsten you are using.*

| Electrode Diameter | Amperage Range - Gas Type♦ - Polarity | |
|---|---|---|
| | (DCEN) – Argon<br>Direct Current Electrode Negative<br>(For Use With Mild Or Stainless Steel) | AC – Argon<br>Unbalanced Wave<br>(For Use With Aluminum) |
| **2% Ceria, 1.5% Lanthanum, Or 2% Thorium Alloy Tungstens** | | |
| .040” (1 mm) | 15-80 | 15-80 |
| 1/16” (1.6 mm) | 70-150 | 70-150 |
| 3/32” (2.4 mm) | 150-250 | 140-235 |
| 1/8” (3.2 mm) | 250-400 | 225-325 |
| **Pure Tungsten** | | |
| .040” (1 mm) | Pure Tungsten Not Recommended For DCEN – Argon | 10-60 |
| 1/16” (1.6 mm) | | 50-100 |
| 3/32” (2.4 mm) | | 100-160 |
| 1/8” (3.2 mm) | | 150-210 |

♦Typical argon shielding gas flow rates are 10 to 25 CFH (cubic feet per hour).

Figures listed are a guide and are a composite of recommendations from American Welding Society (AWS).

### B. Electrode Composition

| Tungsten Type | Application Notes |
|---|---|
| 2% Cerium (Grey*) | Good all–around tungsten for both AC and DC welding. |
| 1.5–2% Lanthanum (Yellow/Blue) | Excellent low amp starts for AC and DC welding. |
| 2% Thorium (Red) | Commonly used for DC welding, not ideal for AC. |
| Pure Tungsten (Green) | **Not Recommended for inverters!**<br>For best results in most applications use a sharpened cerium or lanthanum electrode for AC and DC welding. |
| * Color may vary depending on manufacturer, please refer to manufacturer’s guide for color designation. | |

## 12-2. Preparing Tungsten Electrode For Welding With Phase Control Machines

**Grinding the tungsten electrode produces dust and flying sparks which can cause injury and start fires. Use local exhaust (forced ventilation) at the grinder or wear an approved respirator. Read MSDS for safety information. Consider using tungsten containing ceria, lanthana, or yttria instead of thoria. Grinding dust from thoriated electrodes contains low-level radioactive material. Properly dispose of grinder dust in an environmentally safe way. Wear proper face, hand, and body protection. Keep flammables away.**

### A. Preparing Tungsten For DC Electrode Negative (DCEN) Welding

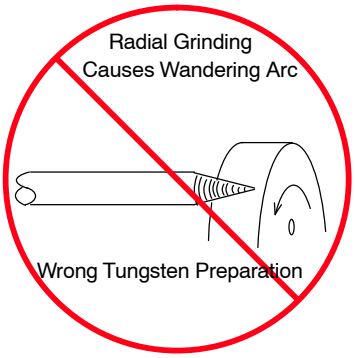


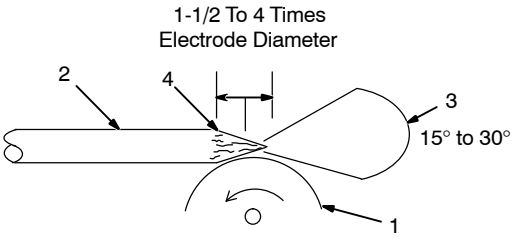


Ideal Tungsten Preparation – Stable Arc

1. Grinding Wheel

Grind end of tungsten on fine grit, hard abrasive wheel before welding. Do not use wheel for other jobs or tungsten can become contaminated causing lower weld quality.

2. Tungsten Electrode

A 2% ceriated tungsten is recommended.

3. Ideal Grind Angle Range: 15° to 30°

☞ *30 degrees is the recommended electrode grind angle.*

4. Straight Ground

Grind lengthwise, **not radial**.

### B. Preparing Tungsten For AC Welding

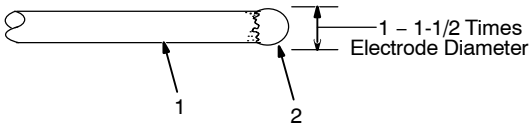


1. Tungsten Electrode

A pure tungsten is recommended..

2. Balled End

Ball end of tungsten by applying AC amperage recommended for a given electrode diameter (see Section 12-1). Let ball on end of the tungsten take its own shape.

# Notes

## 13-1. Positioning The Torch

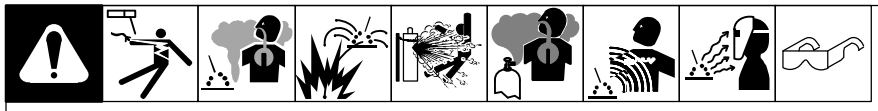

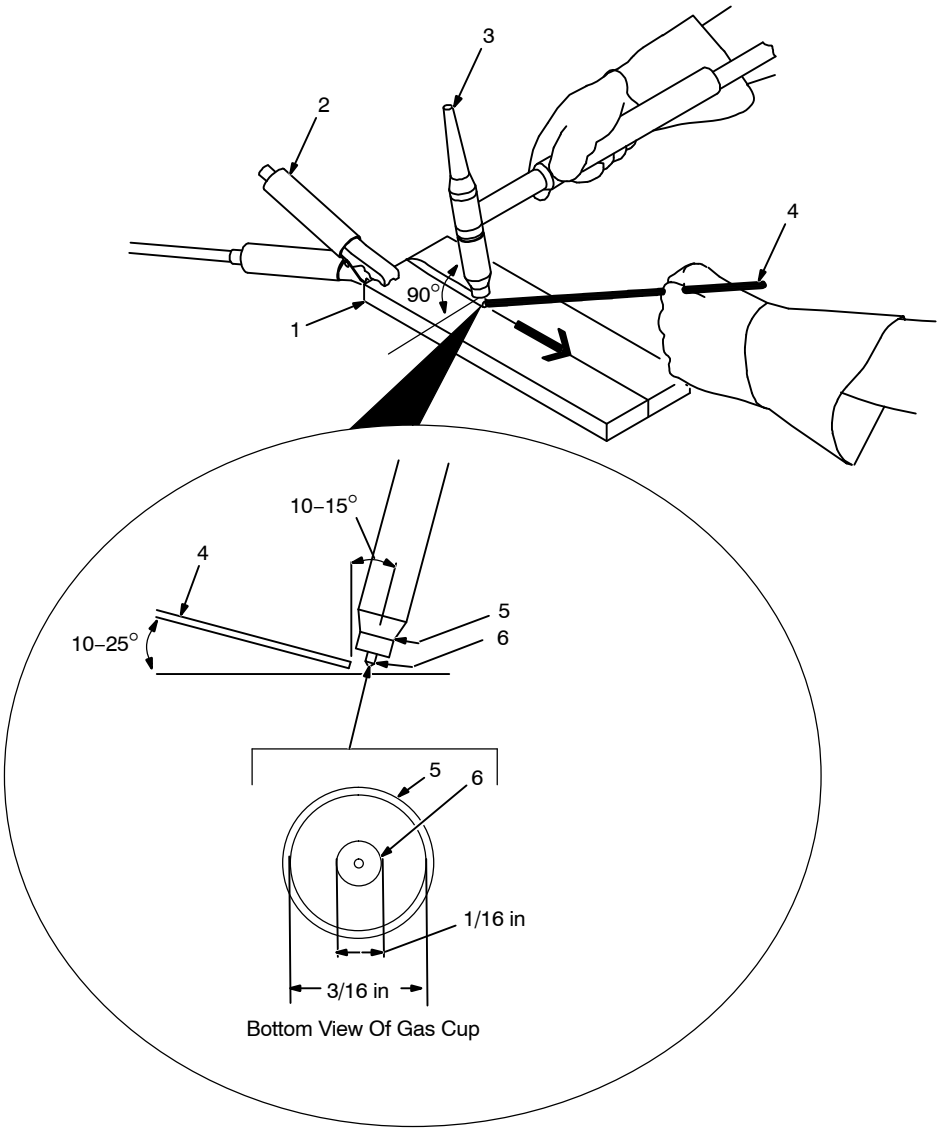


**Grinding the tungsten electrode produces dust and flying sparks which can cause injury and start fires. Use local exhaust (forced ventilation) at the grinder or wear an approved respirator. Read MSDS for safety information. Consider using cerium or lanthanum based tungsten instead of thoriated. Thorium dust contains low-level radioactive material. Properly dispose of grinder dust in an environmentally safe way. Wear proper face, hand, and body protection. Keep flammables away.**

1. Workpiece

Make sure workpiece is clean before welding.

2. Work Clamp

Place as close to the weld as possible.

3. Torch
4. Filler Rod (If Applicable)
5. Gas Cup
6. Tungsten Electrode

Select and prepare tungsten according to Section 12.

**Guidelines:**

The inside diameter of the gas cup should be at least three times the tungsten diameter to provide adequate shielding gas coverage. (For example, if tungsten is 1/16 in diameter, gas cup should be a minimum of 3/16 in diameter.

Tungsten extension is the distance the tungsten extends out gas cup of torch.

The tungsten extension should be no greater than the inside diameter of the gas cup.

Arc length is the distance from the tungsten to the workpiece.

Ref.161892

## 13-2. Torch Movement During Welding

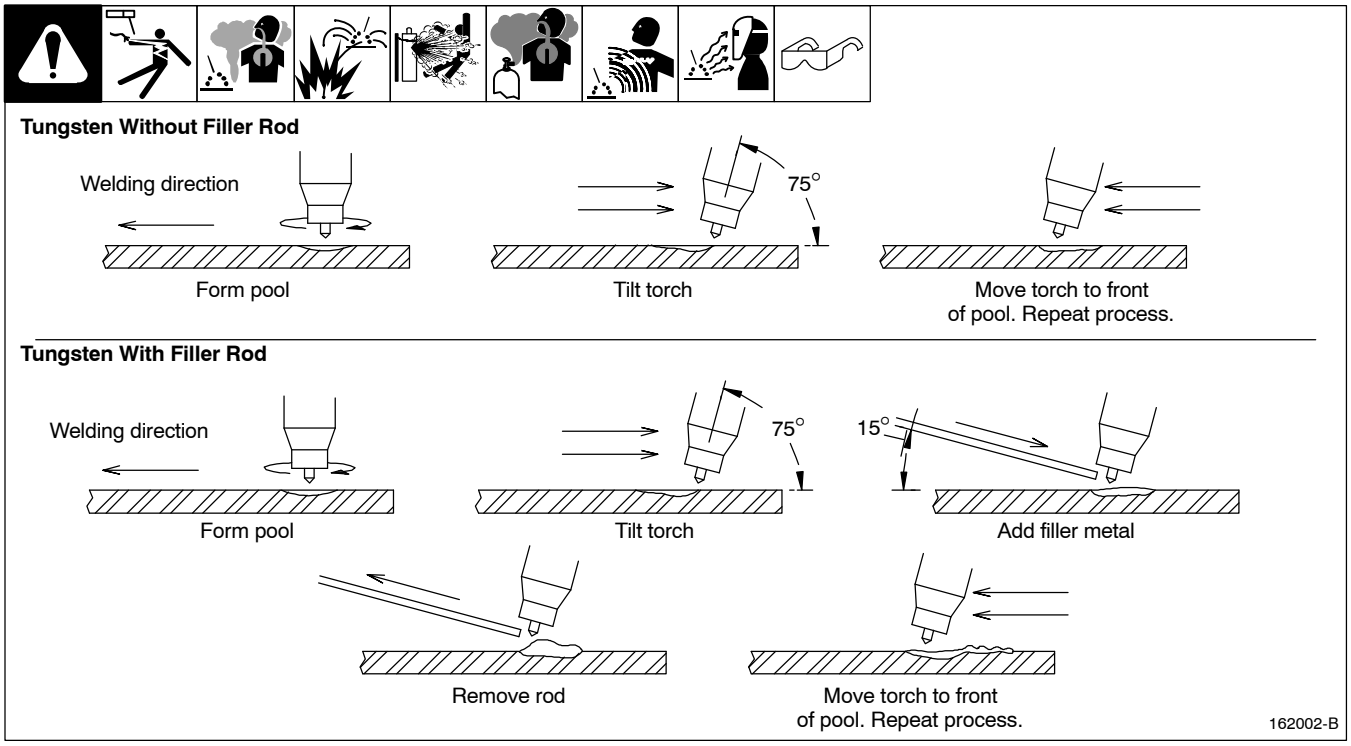


## 13-3. Positioning Torch Tungsten For Various Weld Joints

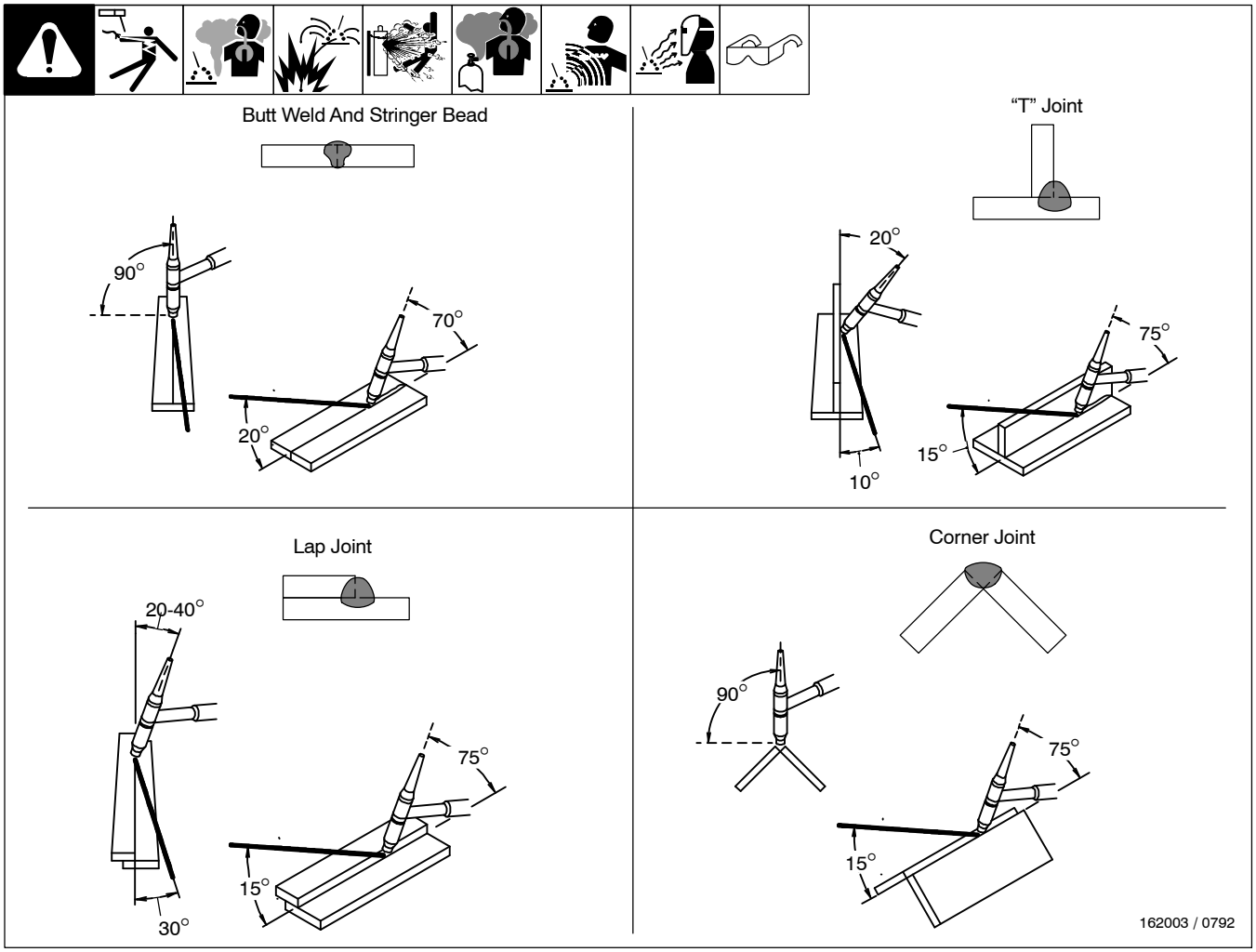

# TRUE BLUE® WARRANTY

## Effective January 1, 2020
## (Equipment with a serial number preface of NA or newer)

This limited warranty supersedes all previous Miller warranties and is exclusive with no other guarantees or warranties expressed or implied.

LIMITED WARRANTY – Subject to the terms and conditions below, Miller Electric Mfg. LLC, Appleton, Wisconsin, warrants to authorized distributors that new Miller equipment sold after the effective date of this limited warranty is free of defects in material and workmanship at the time it is shipped by Miller. THIS WARRANTY IS EXPRESSLY IN LIEU OF ALL OTHER WARRANTIES, EXPRESS OR IMPLIED, INCLUDING THE WARRANTIES OF MERCHANTABILITY AND FITNESS.

Within the warranty periods listed below, Miller will repair or replace any warranted parts or components that fail due to such defects in material or workmanship. Miller must be notified in writing within thirty (30) days of such defect or failure, at which time Miller will provide instructions on the warranty claim procedures to be followed. Notifications submitted as online warranty claims must provide detailed descriptions of the fault and troubleshooting steps taken to diagnose failed parts. Warranty claims that lack the required information as defined in the Miller Service Operation Guide (SOG) may be denied by Miller.

Miller shall honor warranty claims on warranted equipment listed below in the event of a defect within the warranty coverage time periods listed below. Warranty time periods start on the delivery date of the equipment to the end-user purchaser, or 12 months after the equipment is shipped to a North American distributor, or 18 months after the equipment is shipped to an international distributor, whichever occurs first.

1. 5 Years Parts — 3 Years Labor
   * Original Main Power Rectifiers Only to Include SCRs, Diodes, and Discrete Rectifier Modules
2. 3 Years — Parts and Labor Unless Specified
   * Auto-Darkening Helmet Lenses (No Labor) (See Classic Series Exception Below)
   * Engine Driven Welder/Generators **(NOTE: Engines are Warranted Separately by the Engine Manufacturer.)**
   * Insight Welding Intelligence Products (Except External Sensors)
   * Inverter Power Sources
   * Plasma Arc Cutting Power Sources
   * Process Controllers
   * Semi-Automatic and Automatic Wire Feeders
   * Transformer/Rectifier Power Sources
3. 2 Years — Parts and Labor
   * Auto-Darkening Helmet Lenses – Classic Series Only (No Labor)
   * Auto-Darkening Weld Masks (No Labor)
   * Fume Extractors – Capture 5, Filtair 400 and Industrial Collector Series
4. 1 Year — Parts and Labor Unless Specified
   * ArcReach Heater
   * AugmentedArc and LiveArc Welding Systems
   * Automatic Motion Devices
   * Bernard BTB Air-Cooled MIG Guns (No Labor)
   * CoolBelt (No Labor)
   * Desiccant Air Dryer System
   * Field Options **(NOTE: Field options are covered for the remaining warranty period of the product they are installed in, or for a minimum of one year — whichever is greater.)**
   * RFCS Foot Controls (Except RFCS-RJ45)
   * Fume Extractors – Filtair 130, MWX and SWX Series, ZoneFlow Extraction Arms and Motor Control Box
   * HF Units
   * ICE/XT Plasma Cutting Torches (No Labor)
   * Induction Heating Power Sources, Coolers **(NOTE: Digital Recorders are Warranted Separately by the Manufacturer.)**
   * Load Banks
   * Motor-Driven Guns (except Spoolmate Spoolguns)
   * PAPR Blower Unit (No Labor)
   * Positioners and Controllers
   * Racks (For Housing Multiple Power Sources)
   * Running Gear/Trailers
   * Subarc Wire Drive Assemblies
   * Supplied Air Respirator (SAR) Boxes and Panels
   * TIG Torches (No Labor)
   * Tregaskiss Guns (No Labor)
   * Water Cooling Systems
   * Wireless Remote Foot/Hand Controls and Receivers
   * Work Stations/Weld Tables (No Labor)
5. 6 Months — Parts
   * Batteries
6. 90 Days — Parts
   * Accessories (Kits)
   * ArcReach Heater Quick Wrap and Air Cooled Cables
   * Canvas Covers
   * Induction Heating Coils and Blankets, Cables, and Non-Electronic Controls
   * MDX Series MIG Guns
   * M-Guns
   * MIG Guns, Subarc (SAW) Torches, and External Cladding Heads
   * Remote Controls and RFCS-RJ45
   * Replacement Parts (No labor)
   * Spoolmate Spoolguns

Miller's True Blue® Limited Warranty shall not apply to:

1. **Consumable components; such as contact tips, cutting nozzles, contactors, brushes, relays, work station table tops and welding curtains, or parts that fail due to normal wear. (Exception: brushes and relays are covered on all engine-driven products.)**
2. Items furnished by Miller, but manufactured by others, such as engines or trade accessories. These items are covered by the manufacturer's warranty, if any.
3. Equipment that has been modified by any party other than Miller, or equipment that has been improperly installed, improperly operated or misused based upon industry standards, or equipment which has not had reasonable and necessary maintenance, or equipment which has been used for operation outside of the specifications for the equipment.
4. Defects caused by accident, unauthorized repair, or improper testing.

MILLER PRODUCTS ARE INTENDED FOR COMMERCIAL AND INDUSTRIAL USERS TRAINED AND EXPERIENCED IN THE USE AND MAINTENANCE OF WELDING EQUIPMENT.

The exclusive remedies for warranty claims are, at Miller's option, either: (1) repair; or (2) replacement; or, if approved in writing by Miller, (3) the pre-approved cost of repair or replacement at an authorized Miller service station; or (4) payment of or credit for the purchase price (less reasonable depreciation based upon use). Products may not be returned without Miller's written approval. Return shipment shall be at customer's risk and expense.

The above remedies are F.O.B. Appleton, WI, or Miller's authorized service facility. Transportation and freight are the customer's responsibility. TO THE EXTENT PERMITTED BY LAW, THE REMEDIES HEREIN ARE THE SOLE AND EXCLUSIVE REMEDIES REGARDLESS OF THE LEGAL THEORY. IN NO EVENT SHALL MILLER BE LIABLE FOR DIRECT, INDIRECT, SPECIAL, INCIDENTAL OR CONSEQUENTIAL DAMAGES (INCLUDING LOSS OF PROFIT) REGARDLESS OF THE LEGAL THEORY. ANY WARRANTY NOT PROVIDED HEREIN AND ANY IMPLIED WARRANTY, GUARANTY, OR REPRESENTATION, INCLUDING ANY IMPLIED WARRANTY OF MERCHANTABILITY OR FITNESS FOR PARTICULAR PURPOSE, ARE EXCLUDED AND DISCLAIMED BY MILLER.

Some US states do not allow limiting the duration of an implied warranty or the exclusion of certain damages, so the above limitations may not apply to you. This warranty provides specific legal rights, and other rights may be available depending on your state. In Canada, some provinces provide additional warranties or remedies, and to the extent the law prohibits their waiver, the limitations set out above may not apply. This Limited Warranty provides specific legal rights, and other rights may be available, but may vary by province.



*Warranty Questions?*

Call
1-800-4-A-MILLER
for your local
Miller distributor.

Your distributor also gives you ...

**Service**
You always get the fast, reliable response you need. Most replacement parts can be in your hands in 24 hours.

**Support**
Need fast answers to the tough welding questions? Contact your distributor. The expertise of the distributor and Miller is there to help you, every step of the way.

Miller®

# Owner's Record

Please complete and retain with your personal records.

Model Name Serial/Style Number

Purchase Date (Date which equipment was delivered to original customer.)

Distributor

Address

City

State Zip

**Register your product at www.millerwelds.com/support/product–registration**

# For Service

***Contact a DISTRIBUTOR or SERVICE AGENCY near you.***

Always provide Model Name and Serial/Style Number.

Contact your Distributor for:

- Welding Supplies and Consumables
- Options and Accessories
- Personal Protective Equipment (PPE)
- Service and Repair
- Replacement Parts
- Training (Schools, Videos, Books)
- Welding Process Handbooks

To locate a Distributor or Service Agency visit www.millerwelds.com or call 1-800-4-A-Miller

Contact the Delivering Carrier to:

File a claim for loss or damage during shipment.

For assistance in filing or settling claims, contact your distributor and/or equipment manufacturer's Transportation Department.

**Miller Electric Mfg. LLC**
An Illinois Tool Works Company
1635 West Spencer Street
Appleton, WI 54914 USA

**International Headquarters–USA**
USA Phone: 920-735-4505 Auto-Attended
USA & Canada FAX: 920-735-4134
International FAX: 920-735-4125

For International Locations Visit
www.MillerWelds.com

ORIGINAL INSTRUCTIONS – PRINTED IN USA

© 2020 Miller Electric Mfg. LLC 2020–01