OM-1324 204 408J
2006–01

Processes

MIG (GMAW) Welding
Flux Cored (FCAW) Welding

Description

CV DC 1 Phase

Arc Welding Power Source And Wire Feeder

Millermatic® 135/175 And M-10 Gun

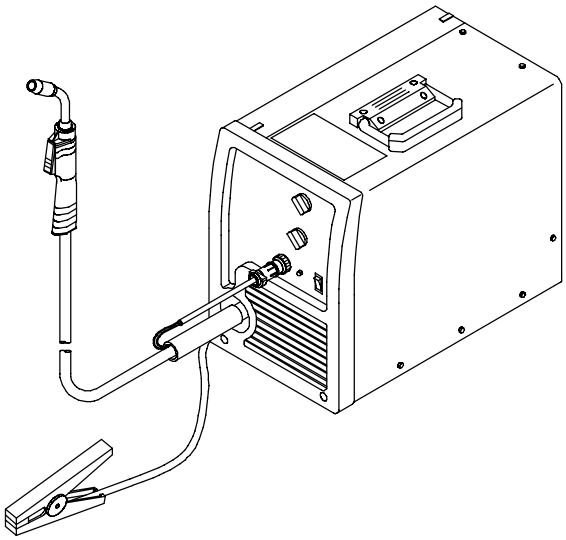

OWNER'S MANUAL

File: MIG (GMAW)

Visit our website at
www.MillerWelds.com

From Miller to You

Thank you and *congratulations* on choosing Miller. Now you can get the job done and get it done right. We know you don't have time to do it any other way.

That's why when Niels Miller first started building arc welders in 1929, he made sure his products offered long-lasting value and superior quality. Like you, his customers couldn't afford anything less. Miller products had to be more than the best they could be. They had to be the best you could buy.

Today, the people that build and sell Miller products continue the tradition. They're just as committed to providing equipment and service that meets the high standards of quality and value established in 1929.

This Owner's Manual is designed to help you get the most out of your Miller products. Please take time to read the Safety precautions. They will help you protect yourself against potential hazards on the worksite. We've made installation and operation quick and easy. With Miller you can count on years of reliable service with proper maintenance. And if for some reason the unit needs repair, there's a Troubleshooting section that will help you figure out what the problem is. The parts list will then help you to decide the exact part you may need to fix the problem. Warranty and service information for your particular model are also provided.

ISO 9001:2000 REGISTERED QUALITY SYSTEM

Miller is the first welding equipment manufacturer in the U.S.A. to be registered to the ISO 9001:2000 Quality System Standard.

TRUE BLUE® WARRANTY

Working as hard as you do – every power source from Miller is backed by the most hassle-free warranty in the business.

Miller Electric manufactures a full line of welders and welding related equipment. For information on other quality Miller products, contact your local Miller distributor to receive the latest full line catalog or individual specification sheets. **To locate your nearest distributor or service agency call 1-800-4-A-Miller, or visit us at www.MillerWelds.com on the web.**

Miller®

TABLE OF CONTENTS

SECTION 1 – SAFETY PRECAUTIONS - READ BEFORE USING 1
1-1. Symbol Usage 1
1-2. Arc Welding Hazards 1
1-3. Additional Symbols For Installation, Operation, And Maintenance 3
1-4. California Proposition 65 Warnings 3
1-5. Principal Safety Standards 4
1-6. EMF Information 4
SECTION 2 – CONSIGNES DE SÉCURITÉ – LIRE AVANT UTILISATION 5
2-1. Symboles utilisés 5
2-2. Dangers relatifs au soudage à l'arc 5
2-3. Dangers supplémentaires en relation avec l'installation, le fonctionnement et la maintenance 7
2-4. Proposition californienne 65 Avertissements 7
2-5. Principales normes de sécurité 8
2-6. Information EMF 8
SECTION 3 – SPECIFICATIONS 9
3-1. Specifications 9
3-2. Duty Cycle And Overheating 10
3-3. Volt-Ampere Curves 11
SECTION 4 – INSTALLATION 12
4-1. Installing Welding Gun 12
4-2. Installing Work Clamp 12
4-3. Work Cable Routing Inside Unit 12
4-4. Process/Polarity Table 13
4-5. Changing Polarity 13
4-6. Installing Gas Supply 14
4-7. Selecting A Location And Connecting Input Power For 115 VAC Model 15
4-8. Selecting A Location And Connecting Input Power For 230 VAC Model 16
4-9. Electrical Service Guide For 230 VAC Model 17
4-10. Installing Wire Spool And Adjusting Hub Tension 17
4-11. Threading Welding Wire 18
SECTION 5 – OPERATION 19
5-1. Controls 19
5-2. Weld Parameter Chart For 115 VAC Model 20
5-3. Weld Parameter Chart For 230 VAC Model 22
SECTION 6 – MAINTENANCE &TROUBLESHOOTING 24
6-1. Routine Maintenance 24
6-2. Overload Protection 24
6-3. Drive Motor Protection And Tip Saver/Short Circuit Protection 24
6-4. Changing Drive Roll Or Wire Inlet Guide 25
6-5. Replacing Gun Contact Tip 25
6-6. Cleaning Or Replacing Gun Liner 26
6-7. Replacing Switch And/Or Head Tube 27
6-8. Troubleshooting Table 28
SECTION 7 – ELECTRICAL DIAGRAM 29

TABLE OF CONTENTS

SECTION 8 – MIG WELDING (GMAW) GUIDELINES **31**
8-1. Typical MIG Process Connections 31
8-2. Typical MIG Process Control Settings 32
8-3. Holding And Positioning Welding Gun 33
8-4. Conditions That Affect Weld Bead Shape 34
8-5. Gun Movement During Welding 35
8-6. Poor Weld Bead Characteristics 35
8-7. Good Weld Bead Characteristics 35
8-8. Troubleshooting – Excessive Spatter 36
8-9. Troubleshooting – Porosity 36
8-10. Troubleshooting – Excessive Penetration 37
8-11. Troubleshooting – Lack Of Penetration 37
8-12. Troubleshooting – Incomplete Fusion 37
8-13. Troubleshooting – Burn-Through 38
8-14. Troubleshooting – Waviness Of Bead 38
8-15. Troubleshooting – Distortion 38
8-16. Common MIG Shielding Gases 39
SECTION 9 – PARTS LIST **40**
WARRANTY

SECTION 1 – SAFETY PRECAUTIONS - READ BEFORE USING

▲ **Warning: Protect yourself and others from injury — read and follow these precautions.**

1-1. Symbol Usage

Means Warning! Watch Out! There are possible hazards with this procedure! The possible hazards are shown in the adjoining symbols.

▲ **Marks a special safety message.**

☞ *Means "Note"; not safety related.*

This group of symbols means Warning! Watch Out! possible ELECTRIC SHOCK, MOVING PARTS, and HOT PARTS hazards. Consult symbols and related instructions below for necessary actions to avoid the hazards.

1-2. Arc Welding Hazards

▲ **The symbols shown below are used throughout this manual to call attention to and identify possible hazards. When you see the symbol, watch out, and follow the related instructions to avoid the hazard. The safety information given below is only a summary of the more complete safety information found in the Safety Standards listed in Section 1-5. Read and follow all Safety Standards.**

▲ **Only qualified persons should install, operate, maintain, and repair this unit.**

▲ **During operation, keep everybody, especially children, away.**

ELECTRIC SHOCK can kill.

Touching live electrical parts can cause fatal shocks or severe burns. The electrode and work circuit is electrically live whenever the output is on. The input power circuit and machine internal circuits are also live when power is on. In semiautomatic or automatic wire welding, the wire, wire reel, drive roll housing, and all metal parts touching the welding wire are electrically live. Incorrectly installed or improperly grounded equipment is a hazard.

- Do not touch live electrical parts.
- Wear dry, hole-free insulating gloves and body protection.
- Insulate yourself from work and ground using dry insulating mats or covers big enough to prevent any physical contact with the work or ground.
- Do not use AC output in damp areas, if movement is confined, or if there is a danger of falling.
- Use AC output ONLY if required for the welding process.
- If AC output is required, use remote output control if present on unit.
- Additional safety precautions are required when any of the following electrically hazardous conditions are present: in damp locations or while wearing wet clothing; on metal structures such as floors, gratings, or scaffolds; when in cramped positions such as sitting, kneeling, or lying; or when there is a high risk of unavoidable or accidental contact with the workpiece or ground. For these conditions, use the following equipment in order presented: 1) a semiautomatic DC constant voltage (wire) welder, 2) a DC manual (stick) welder, or 3) an AC welder with reduced open-circuit voltage. In most situations, use of a DC, constant voltage wire welder is recommended. And, do not work alone!
- Disconnect input power or stop engine before installing or servicing this equipment. Lockout/tagout input power according to OSHA 29 CFR 1910.147 (see Safety Standards).
- Properly install and ground this equipment according to its Owner's Manual and national, state, and local codes.
- Always verify the supply ground – check and be sure that input power cord ground wire is properly connected to ground terminal in disconnect box or that cord plug is connected to a properly grounded receptacle outlet.
- When making input connections, attach proper grounding conductor first – double-check connections.
- Frequently inspect input power cord for damage or bare wiring – replace cord immediately if damaged – bare wiring can kill.
- Turn off all equipment when not in use.
- Do not use worn, damaged, undersized, or poorly spliced cables.
- Do not drape cables over your body.
- If earth grounding of the workpiece is required, ground it directly with a separate cable.
- Do not touch electrode if you are in contact with the work, ground, or another electrode from a different machine.
- Do not touch electrode holders connected to two welding machines at the same time since double open-circuit voltage will be present.
- Use only well-maintained equipment. Repair or replace damaged parts at once. Maintain unit according to manual.
- Wear a safety harness if working above floor level.
- Keep all panels and covers securely in place.
- Clamp work cable with good metal-to-metal contact to workpiece or worktable as near the weld as practical.
- Insulate work clamp when not connected to workpiece to prevent contact with any metal object.
- Do not connect more than one electrode or work cable to any single weld output terminal.

SIGNIFICANT DC VOLTAGE exists in inverter-type welding power sources after removal of input power.

- Turn Off inverter, disconnect input power, and discharge input capacitors according to instructions in Maintenance Section before touching any parts.

FUMES AND GASES can be hazardous.

Welding produces fumes and gases. Breathing these fumes and gases can be hazardous to your health.

- Keep your head out of the fumes. Do not breathe the fumes.
- If inside, ventilate the area and/or use local forced ventilation at the arc to remove welding fumes and gases.
- If ventilation is poor, wear an approved air-supplied respirator.
- Read and understand the Material Safety Data Sheets (MSDSs) and the manufacturer's instructions for metals, consumables, coatings, cleaners, and degreasers.
- Work in a confined space only if it is well ventilated, or while wearing an air-supplied respirator. Always have a trained watchperson nearby. Welding fumes and gases can displace air and lower the oxygen level causing injury or death. Be sure the breathing air is safe.
- Do not weld in locations near degreasing, cleaning, or spraying operations. The heat and rays of the arc can react with vapors to form highly toxic and irritating gases.
- Do not weld on coated metals, such as galvanized, lead, or cadmium plated steel, unless the coating is removed from the weld area, the area is well ventilated, and while wearing an air-supplied respirator. The coatings and any metals containing these elements can give off toxic fumes if welded.

ARC RAYS can burn eyes and skin.

Arc rays from the welding process produce intense visible and invisible (ultraviolet and infrared) rays that can burn eyes and skin. Sparks fly off from the weld.

- Wear an approved welding helmet fitted with a proper shade of filter lenses to protect your face and eyes when welding or watching (see ANSI Z49.1 and Z87.1 listed in Safety Standards).
- Wear approved safety glasses with side shields under your helmet.
- Use protective screens or barriers to protect others from flash, glare and sparks; warn others not to watch the arc.
- Wear protective clothing made from durable, flame-resistant material (leather, heavy cotton, or wool) and foot protection.

WELDING can cause fire or explosion.

Welding on closed containers, such as tanks, drums, or pipes, can cause them to blow up. Sparks can fly off from the welding arc. The flying sparks, hot workpiece, and hot equipment can cause fires and burns. Accidental contact of electrode to metal objects can cause sparks, explosion, overheating, or fire. Check and be sure the area is safe before doing any welding.

- Remove all flammables within 35 ft (10.7 m) of the welding arc. If this is not possible, tightly cover them with approved covers.
- Do not weld where flying sparks can strike flammable material.
- Protect yourself and others from flying sparks and hot metal.
- Be alert that welding sparks and hot materials from welding can easily go through small cracks and openings to adjacent areas.
- Watch for fire, and keep a fire extinguisher nearby.
- Be aware that welding on a ceiling, floor, bulkhead, or partition can cause fire on the hidden side.
- Do not weld on closed containers such as tanks, drums, or pipes, unless they are properly prepared according to AWS F4.1 (see Safety Standards).
- Connect work cable to the work as close to the welding area as practical to prevent welding current from traveling long, possibly unknown paths and causing electric shock, sparks, and fire hazards.
- Do not use welder to thaw frozen pipes.
- Remove stick electrode from holder or cut off welding wire at contact tip when not in use.
- Wear oil-free protective garments such as leather gloves, heavy shirt, cuffless trousers, high shoes, and a cap.
- Remove any combustibles, such as a butane lighter or matches, from your person before doing any welding.
- Follow requirements in OSHA 1910.252 (a) (2) (iv) and NFPA 51B for hot work and have a fire watcher and extinguisher nearby.

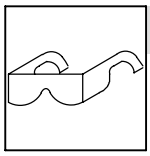

FLYING METAL can injure eyes.

- Welding, chipping, wire brushing, and grinding cause sparks and flying metal. As welds cool, they can throw off slag.
- Wear approved safety glasses with side shields even under your welding helmet.

BUILDUP OF GAS can injure or kill.

- Shut off shielding gas supply when not in use.
- Always ventilate confined spaces or use approved air-supplied respirator.

HOT PARTS can cause severe burns.

- Do not touch hot parts bare handed.
- Allow cooling period before working on gun or torch.
- To handle hot parts, use proper tools and/or wear heavy, insulated welding gloves and clothing to prevent burns.

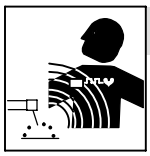

MAGNETIC FIELDS can affect pacemakers.

- Pacemaker wearers keep away.
- Wearers should consult their doctor before going near arc welding, gouging, or spot welding operations.

NOISE can damage hearing.

Noise from some processes or equipment can damage hearing.

- Wear approved ear protection if noise level is high.

CYLINDERS can explode if damaged.

Shielding gas cylinders contain gas under high pressure. If damaged, a cylinder can explode. Since gas cylinders are normally part of the welding process, be sure to treat them carefully.

- Protect compressed gas cylinders from excessive heat, mechanical shocks, physical damage, slag, open flames, sparks, and arcs.
- Install cylinders in an upright position by securing to a stationary support or cylinder rack to prevent falling or tipping.
- Keep cylinders away from any welding or other electrical circuits.
- Never drape a welding torch over a gas cylinder.
- Never allow a welding electrode to touch any cylinder.
- Never weld on a pressurized cylinder – explosion will result.
- Use only correct shielding gas cylinders, regulators, hoses, and fittings designed for the specific application; maintain them and associated parts in good condition.
- Turn face away from valve outlet when opening cylinder valve.
- Keep protective cap in place over valve except when cylinder is in use or connected for use.
- Use the right equipment, correct procedures, and sufficient number of persons to lift and move cylinders.
- Read and follow instructions on compressed gas cylinders, associated equipment, and Compressed Gas Association (CGA) publication P-1 listed in Safety Standards.

1-3. Additional Symbols For Installation, Operation, And Maintenance

FIRE OR EXPLOSION hazard.

- Do not install or place unit on, over, or near combustible surfaces.
- Do not install unit near flammables.
- Do not overload building wiring – be sure power supply system is properly sized, rated, and protected to handle this unit.

FALLING UNIT can cause injury.

- Use lifting eye to lift unit only, NOT running gear, gas cylinders, or any other accessories.
- Use equipment of adequate capacity to lift and support unit.
- If using lift forks to move unit, be sure forks are long enough to extend beyond opposite side of unit.

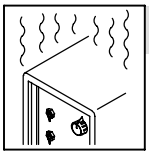

OVERUSE can cause OVERHEATING

- Allow cooling period; follow rated duty cycle.
- Reduce current or reduce duty cycle before starting to weld again.
- Do not block or filter airflow to unit.

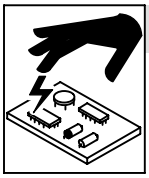

STATIC (ESD) can damage PC boards.

- Put on grounded wrist strap BEFORE handling boards or parts.
- Use proper static-proof bags and boxes to store, move, or ship PC boards.

MOVING PARTS can cause injury.

- Keep away from moving parts.
- Keep away from pinch points such as drive rolls.

WELDING WIRE can cause injury.

- Do not press gun trigger until instructed to do so.
- Do not point gun toward any part of the body, other people, or any metal when threading welding wire.

MOVING PARTS can cause injury.

- Keep away from moving parts such as fans.
- Keep all doors, panels, covers, and guards closed and securely in place.
- Have only qualified persons remove doors, panels, covers, or guards for maintenance as necessary.
- Reinstall doors, panels, covers, or guards when maintenance is finished and before reconnecting input power.

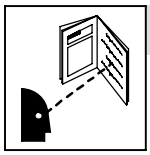

READ INSTRUCTIONS.

- Read Owner's Manual before using or servicing unit.
- Use only genuine Miller/Hobart replacement parts.

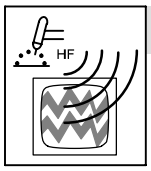

H.F. RADIATION can cause interference.

- High-frequency (H.F.) can interfere with radio navigation, safety services, computers, and communications equipment.
- Have only qualified persons familiar with electronic equipment perform this installation.
- The user is responsible for having a qualified electrician promptly correct any interference problem resulting from the installation.
- If notified by the FCC about interference, stop using the equipment at once.
- Have the installation regularly checked and maintained.
- Keep high-frequency source doors and panels tightly shut, keep spark gaps at correct setting, and use grounding and shielding to minimize the possibility of interference.

ARC WELDING can cause interference.

- Electromagnetic energy can interfere with sensitive electronic equipment such as computers and computer-driven equipment such as robots.
- Be sure all equipment in the welding area is electromagnetically compatible.
- To reduce possible interference, keep weld cables as short as possible, close together, and down low, such as on the floor.
- Locate welding operation 100 meters from any sensitive electronic equipment.
- Be sure this welding machine is installed and grounded according to this manual.
- If interference still occurs, the user must take extra measures such as moving the welding machine, using shielded cables, using line filters, or shielding the work area.

1-4. California Proposition 65 Warnings

▲ **Welding or cutting equipment produces fumes or gases which contain chemicals known to the State of California to cause birth defects and, in some cases, cancer. (California Health & Safety Code Section 25249.5 et seq.)**

▲ **Battery posts, terminals and related accessories contain lead and lead compounds, chemicals known to the State of California to cause cancer and birth defects or other reproductive harm. Wash hands after handling.**

For Gasoline Engines:

▲ **Engine exhaust contains chemicals known to the State of California to cause cancer, birth defects, or other reproductive harm.**

For Diesel Engines:

▲ **Diesel engine exhaust and some of its constituents are known to the State of California to cause cancer, birth defects, and other reproductive harm.**

1-5. Principal Safety Standards

Safety in Welding, Cutting, and Allied Processes, ANSI Standard Z49.1, from Global Engineering Documents (phone: 1-877-413-5184, website: www.global.ihs.com).

Recommended Safe Practices for the Preparation for Welding and Cutting of Containers and Piping, American Welding Society Standard AWS F4.1 from Global Engineering Documents (phone: 1-877-413-5184, website: www.global.ihs.com).

National Electrical Code, NFPA Standard 70, from National Fire Protection Association, P.O. Box 9101, 1 Battery March Park, Quincy, MA 02269–9101 (phone: 617–770–3000, website: www.nfpa.org).

Safe Handling of Compressed Gases in Cylinders, CGA Pamphlet P-1, from Compressed Gas Association, 1735 Jefferson Davis Highway, Suite 1004, Arlington, VA 22202–4102 (phone: 703–412–0900, website: www.cganet.com).

Code for Safety in Welding and Cutting, CSA Standard W117.2, from Canadian Standards Association, Standards Sales, 178 Rexdale Boulevard, Rexdale, Ontario, Canada M9W 1R3 (phone: 800–463–6727 or in Toronto 416–747–4044, website: www.csa–international.org).

Practice For Occupational And Educational Eye And Face Protection, ANSI Standard Z87.1, from American National Standards Institute, 11 West 42nd Street, New York, NY 10036–8002 (phone: 212–642–4900, website: www.ansi.org).

Standard for Fire Prevention During Welding, Cutting, and Other Hot Work, NFPA Standard 51B, from National Fire Protection Association, P.O. Box 9101, 1 Battery March Park, Quincy, MA 02269–9101 (phone: 617–770–3000, website: www.nfpa.org).

OSHA, Occupational Safety and Health Standards for General Industry, Title 29, Code of Federal Regulations (CFR), Part 1910, Subpart Q, and Part 1926, Subpart J, from U.S. Government Printing Office, Superintendent of Documents, P.O. Box 371954, Pittsburgh, PA 15250 (there are 10 Regional Offices––phone for Region 5, Chicago, is 312–353–2220, website: www.osha.gov).

1-6. EMF Information

Considerations About Welding And The Effects Of Low Frequency Electric And Magnetic Fields

Welding current, as it flows through welding cables, will cause electromagnetic fields. There has been and still is some concern about such fields. However, after examining more than 500 studies spanning 17 years of research, a special blue ribbon committee of the National Research Council concluded that: “The body of evidence, in the committee’s judgment, has not demonstrated that exposure to power-frequency electric and magnetic fields is a human-health hazard.” However, studies are still going forth and evidence continues to be examined. Until the final conclusions of the research are reached, you may wish to minimize your exposure to electromagnetic fields when welding or cutting.

To reduce magnetic fields in the workplace, use the following procedures:

1. Keep cables close together by twisting or taping them.
2. Arrange cables to one side and away from the operator.
3. Do not coil or drape cables around your body.
4. Keep welding power source and cables as far away from operator as practical.
5. Connect work clamp to workpiece as close to the weld as possible.

About Pacemakers:

Pacemaker wearers consult your doctor before welding or going near welding operations. If cleared by your doctor, then following the above procedures is recommended.

▲ **Avertissement : se protéger et protéger les autres contre le risque de blessure — lire et respecter ces consignes.**

2-1. Symboles utilisés

Symbole graphique d'avertissement ! Attention ! Cette procédure comporte des risques possibles ! Les dangers éventuels sont représentés par les symboles graphiques joints.

▲ **Indique un message de sécurité particulier**

☞ *Signifie NOTE ; n'est pas relatif à la sécurité.*

Ce groupe de symboles signifie Avertissement ! Attention ! Risques d'ÉLECTROCUTION, ORGANES MOBILES et PARTIES CHAUDES. Consulter les symboles et les instructions afférentes ci-dessous concernant les mesures à prendre pour supprimer les dangers.

2-2. Dangers relatifs au soudage à l'arc

▲ **Les symboles représentés ci-dessous sont utilisés dans ce manuel pour attirer l'attention et identifier les dangers possibles. En présence de l'un de ces symboles, prendre garde et suivre les instructions afférentes pour éviter tout risque. Les instructions en matière de sécurité indiquées ci-dessous ne constituent qu'un sommaire des instructions de sécurité plus complètes fournies dans les normes de sécurité énumérées dans la Section 2-5. Lire et observer toutes les normes de sécurité.**

▲ **Seul un personnel qualifié est autorisé à installer, faire fonctionner, entretenir et réparer cet appareil.**

▲ **Pendant le fonctionnement, maintenir à distance toutes les personnes, notamment les enfants de l'appareil.**

UNE DÉCHARGE ÉLECTRIQUE peut entraîner la mort.

Le contact d'organes électriques sous tension peut provoquer des accidents mortels ou des brûlures graves. Le circuit de l'électrode et de la pièce est sous tension lorsque le courant est délivré à la sortie. Le circuit d'alimentation et les circuits internes de la machine sont également sous tension lorsque l'alimentation est sur Marche. Dans le mode de soudage avec du fil, le fil, le dérouleur, le bloc de commande du rouleau et toutes les parties métalliques en contact avec le fil sont sous tension électrique. Un équipement installé ou mis à la terre de manière incorrecte ou impropre constitue un danger.

- Ne pas toucher aux pièces électriques sous tension.
- Porter des gants isolants et des vêtements de protection secs et sans trous.
- S'isoler de la pièce à couper et du sol en utilisant des housses ou des tapis assez grands afin d'éviter tout contact physique avec la pièce à couper ou le sol.
- Ne pas se servir de source électrique à courant électrique dans les zones humides, dans les endroits confinés ou là où on risque de tomber.
- Se servir d'une source électrique à courant électrique UNIQUEMENT si le procédé de soudage le demande.
- Si l'utilisation d'une source électrique à courant électrique s'avère nécessaire, se servir de la fonction de télécommande si l'appareil en est équipé.
- D'autres consignes de sécurité sont nécessaires dans les conditions suivantes : risques électriques dans un environnement humide ou si l'on porte des vêtements mouillés ; sur des structures métalliques telles que sols, grilles ou échafaudages ; en position coincée comme assise, à genoux ou couchée ; ou s'il y a un risque élevé de contact inévitable ou accidentel avec la pièce à souder ou le sol. Dans ces conditions, utiliser les équipements suivants, dans l'ordre indiqué : 1) un poste à souder DC à tension constante (à fil), 2) un poste à souder DC manuel (électrode) ou 3) un poste à souder AC à tension à vide réduite. Dans la plupart des situations, l'utilisation d'un poste à souder DC à fil à tension constante est recommandée. En outre, ne pas travailler seul !
- Couper l'alimentation ou arrêter le moteur avant de procéder à l'installation, à la réparation ou à l'entretien de l'appareil. Déverrouiller l'alimentation selon la norme OSHA 29 CFR 1910.147 (voir normes de sécurité).
- Installer le poste correctement et le mettre à la terre convenablement selon les consignes du manuel de l'opérateur et les normes nationales, provinciales et locales.
- Toujours vérifier la terre du cordon d'alimentation. Vérifier et s'assurer que le fil de terre du cordon d'alimentation est bien raccordé à la borne de terre du sectionneur ou que la fiche du cordon est raccordée à une prise correctement mise à la terre.
- En effectuant les raccordements d'entrée, fixer d'abord le conducteur de mise à la terre approprié et contre-vérifier les connexions.
- Vérifier fréquemment le cordon d'alimentation afin de s'assurer qu'il n'est pas altéré ou à nu, le remplacer immédiatement s'il l'est. Un fil à nu peut entraîner la mort.
- L'équipement doit être hors tension lorsqu'il n'est pas utilisé.
- Ne pas utiliser des câbles usés, endommagés, de grosseur insuffisante ou mal épissés.
- Ne pas enrouler les câbles autour du corps.
- Si la pièce soudée doit être mise à la terre, le faire directement avec un câble distinct.
- Ne pas toucher l'électrode quand on est en contact avec la pièce, la terre ou une électrode provenant d'une autre machine.
- Ne pas toucher des porte électrodes connectés à deux machines en même temps à cause de la présence d'une tension à vide doublée.
- N'utiliser qu'un matériel en bon état. Réparer ou remplacer sur-le-champ les pièces endommagées. Entretenir l'appareil conformément à ce manuel.
- Porter un harnais de sécurité si l'on doit travailler au-dessus du sol.
- S'assurer que tous les panneaux et couvercles sont correctement en place.
- Fixer le câble de retour de façon à obtenir un bon contact métal-métal avec la pièce à souder ou la table de travail, le plus près possible de la soudure.
- Isoler la pince de masse quand pas mis à la pièce pour éviter le contact avec tout objet métallique.
- Ne pas raccorder plus d'une électrode ou plus d'un câble de masse à une même borne de sortie de soudage.

Il reste une TENSION DC NON NÉGLIGEABLE dans les sources de soudage onduleur quand on a coupé l'alimentation.

- Arrêter les convertisseurs, débrancher le courant électrique et décharger les condensateurs d'alimentation selon les instructions indiquées dans la partie Entretien avant de toucher les pièces.

LES FUMÉES ET LES GAZ peuvent être dangereux.

Le soudage génère des fumées et des gaz. Leur inhalation peut être dangereuse pour la santé.

- Ne pas mettre sa tête au-dessus des vapeurs. Ne pas respirer ces vapeurs.
- À l'intérieur, ventiler la zone et/ou utiliser une ventilation forcée au niveau de l'arc pour l'évacuation des fumées et des gaz de soudage.
- Si la ventilation est médiocre, porter un respirateur anti-vapeurs approuvé.
- Lire et comprendre les spécifications de sécurité des matériaux (MSDS) et les instructions du fabricant concernant les métaux, les consommables, les revêtements, les nettoyants et les dégraisseurs.
- Travailler dans un espace fermé seulement s'il est bien ventilé ou en portant un respirateur à alimentation d'air. Demander toujours à un surveillant dûment formé de se tenir à proximité. Des fumées et des gaz de soudage peuvent déplacer l'air et abaisser le niveau d'oxygène provoquant des blessures ou des accidents mortels. S'assurer que l'air de respiration ne présente aucun danger.
- Ne pas souder dans des endroits situés à proximité d'opérations de dégraissage, de nettoyage ou de pulvérisation. La chaleur et les rayons de l'arc peuvent réagir en présence de vapeurs et former des gaz hautement toxiques et irritants.
- Ne pas souder des métaux munis d'un revêtement, tels que l'acier galvanisé, plaqué en plomb ou au cadmium à moins que le revêtement n'ait été enlevé dans la zone de soudure, que l'endroit soit bien ventilé et en portant un respirateur à alimentation d'air. Les revêtements et tous les métaux renfermant ces éléments peuvent dégager des fumées toxiques en cas de soudage.

LES RAYONS D'ARC peuvent entraîner des brûlures aux yeux et à la peau.

Le rayonnement de l'arc du procédé de soudage génère des rayons visibles et invisibles intenses (ultraviolets et infrarouges) susceptibles de provoquer des brûlures dans les yeux et sur la peau. Des étincelles sont projetées pendant le soudage.

- Porter un casque de soudage approuvé muni de verres filtrants approprié pour protéger visage et yeux pendant le soudage (voir ANSI Z49.1 et Z87.1 énuméré dans les normes de sécurité).
- Porter des lunettes de sécurité avec écrans latéraux même sous votre casque.
- Avoir recours à des écrans protecteurs ou à des rideaux pour protéger les autres contre les rayonnements les éblouissements et les étincelles ; prévenir toute personne sur les lieux de ne pas regarder l'arc.
- Porter des vêtements confectionnés avec des matières résistantes et ignifuges (cuir, coton lourd ou laine) et des bottes de protection.

LE SOUDAGE peut provoquer un incendie ou une explosion.

Le soudage effectué sur des conteneurs fermés tels que des réservoirs, tambours ou des conduites peut provoquer leur éclatement. Des étincelles peuvent être projetées de l'arc de soudure. La projection d'étincelles, des pièces chaudes et des équipements chauds peuvent provoquer des incendies et des brûlures. Le contact accidentel de l'électrode avec des objets métalliques peut provoquer des étincelles, une explosion, une surchauffe ou un incendie. Avant de commencer le soudage, vérifier et s'assurer que l'endroit ne présente pas de danger.

- Déplacer toutes les substances inflammables à une distance de 10,7 m de l'arc de soudage. En cas d'impossibilité, les recouvrir soigneusement avec des protections homologuées.
- Ne pas souder dans un endroit où des étincelles peuvent tomber sur des substances inflammables.
- Se protéger, ainsi que toute autre personne travaillant sur les lieux, contre les étincelles et le métal chaud.
- Des étincelles et des matériaux chauds du soudage peuvent facilement passer dans d'autres zones en traversant de petites fissures et des ouvertures.
- Afin d'éliminer tout risque de feu, être vigilant et garder toujours un extincteur à la portée de main.
- Le soudage effectué sur un plafond, plancher, paroi ou séparation peut déclencher un incendie de l'autre côté.
- Ne pas effectuer le soudage sur des conteneurs fermés tels que des réservoirs, tambours, ou conduites, à moins qu'ils n'aient été préparés correctement conformément à AWS F4.1 (voir les normes de sécurité).
- Brancher le câble de masse sur la pièce le plus près possible de la zone de soudage pour éviter le transport du courant sur une longue distance par des chemins inconnus éventuels en provoquant des risques d'électrocution, d'étincelles et d'incendie.
- Ne pas utiliser le poste de soudage pour dégeler des conduites gelées.
- En cas de non-utilisation, enlever la baguette d'électrode du porte-électrode ou couper le fil à la pointe de contact.
- Porter des vêtements de protection exempts d'huile tels que des gants en cuir, une veste résistante, des pantalons sans revers, des bottes et un casque.
- Avant de souder, retirer toute substance combustible de ses poches telles qu'un allumeur au butane ou des allumettes.
- Suivre les consignes de OSHA 1910.252 (a) (2) (iv) et de NFPA 51B pour travaux de soudage et prévoir un détecteur d'incendie et un extincteur à proximité.

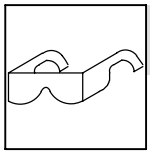

DES PARTICULES VOLANTES peuvent blesser les yeux.

- Le soudage, l'écaillement, le passage de la pièce à la brosse en fil de fer, et le meulage génèrent des étincelles et des particules métalliques volantes. Pendant la période de refroidissement des soudures, elles risquent de projeter du laitier.
- Porter des lunettes de sécurité avec écrans latéraux ou un écran facial.

LES ACCUMULATIONS DE GAZ risquent de provoquer des blessures ou même la mort.

- Fermer l'alimentation du gaz protecteur en cas de non-utilisation.
- Veiller toujours à bien aérer les espaces confinés ou se servir d'un respirateur d'adduction d'air homologué.

DES PIÈCES CHAUDES peuvent provoquer des brûlures graves.

- Ne pas toucher des parties chaudes à mains nues.
- Prévoir une période de refroidissement avant d'utiliser le pistolet ou la torche.
- Ne pas toucher aux pièces chaudes, utiliser les outils recommandés et porter des gants de soudage et des vêtements épais pour éviter les brûlures.

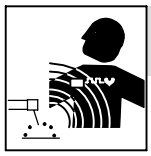

LES CHAMPS MAGNÉTIQUES peuvent affecter les stimulateurs cardiaques.

- Porteurs de stimulateur cardiaque, rester à distance.
- Les porteurs d'un stimulateur cardiaque doivent d'abord consulter leur médecin avant de s'approcher des opérations de soudage à l'arc, de gougeage ou de soudage par points.

LE BRUIT peut endommager l'ouïe.

Le bruit des processus et des équipements peut affecter l'ouïe.

- Porter des protections approuvées pour les oreilles si le niveau sonore est trop élevé.

LES BOUTEILLES peuvent exploser si elles sont endommagées.

Des bouteilles de gaz protecteur contiennent du gaz sous haute pression. Si une bouteille est endommagée, elle peut exploser. Du fait que les bouteilles de gaz font normalement partie du procédé de soudage, les manipuler avec précaution.

- Protéger les bouteilles de gaz comprimé d'une chaleur excessive, des chocs mécaniques, des dommages physiques, du laitier, des flammes ouvertes, des étincelles et des arcs.
- Placer les bouteilles debout en les fixant dans un support stationnaire ou dans un porte-bouteilles pour les empêcher de tomber ou de se renverser.
- Tenir les bouteilles éloignées des circuits de soudage ou autres circuits électriques.
- Ne jamais placer une torche de soudage sur une bouteille à gaz.
- Une électrode de soudage ne doit jamais entrer en contact avec une bouteille.
- Ne jamais souder une bouteille pressurisée – risque d'explosion.
- Utiliser seulement des bouteilles de gaz protecteur, régulateurs, tuyaux et raccords convenables pour cette application spécifique ; les maintenir ainsi que les éléments associés en bon état.
- Détourner votre visage du détendeur-régulateur lorsque vous ouvrez la soupape de la bouteille.
- Le couvercle du détendeur doit toujours être en place, sauf lorsque la bouteille est utilisée ou qu'elle est reliée pour usage ultérieur.
- Utiliser les équipements corrects, les bonnes procédures et suffisamment de personnes pour soulever et déplacer les bouteilles.
- Lire et suivre les instructions sur les bouteilles de gaz comprimé, l'équipement connexe et le dépliant P-1 de la CGA (Compressed Gas Association) mentionné dans les principales normes de sécurité.

2-3. Dangers supplémentaires en relation avec l'installation, le fonctionnement et la maintenance

Risque D'INCENDIE OU D'EXPLOSION.

- Ne pas placer l'appareil sur, au-dessus ou à proximité de surfaces inflammables.
- Ne pas installer l'appareil à proximité de produits inflammables.
- Ne pas surcharger l'installation électrique – s'assurer que l'alimentation est correctement dimensionnée et protégée avant de mettre l'appareil en service.

LA CHUTE DE L'APPAREIL peut blesser.

- Utiliser l'anneau de levage uniquement pour soulever l'appareil, NON PAS les chariots, les bouteilles de gaz ou tout autre accessoire.
- Utiliser un équipement de levage de capacité suffisante pour lever l'appareil.
- En utilisant des fourches de levage pour déplacer l'unité, s'assurer que les fourches sont suffisamment longues pour dépasser du côté opposé de l'appareil.

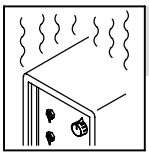

L'EMPLOI EXCESSIF peut SURCHAUFFER L'ÉQUIPEMENT.

- Prévoir une période de refroidissement ; respecter le cycle opératoire nominal.
- Réduire le courant ou le facteur de marche avant de poursuivre le soudage.
- Ne pas obstruer les passages d'air du poste.

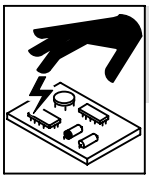

LES CHARGES ÉLECTROSTATIQUES peuvent endommager les circuits imprimés.

- Établir la connexion avec la barrette de terre avant de manipuler des cartes ou des pièces.
- Utiliser des pochettes et des boîtes antistatiques pour stocker, déplacer ou expédier des cartes PC.

DES ORGANES MOBILES peuvent provoquer des blessures.

- Ne pas s'approcher des organes mobiles.
- Ne pas s'approcher des points de coincement tels que des rouleaux de commande.

LES FILS DE SOUDAGE peuvent provoquer des blessures.

- Ne pas appuyer sur la gâchette avant d'en avoir reçu l'instruction.
- Ne pas diriger le pistolet vers soi, d'autres personnes ou toute pièce mécanique en engageant le fil de soudage.

DES ORGANES MOBILES peuvent provoquer des blessures.

- S'abstenir de toucher des organes mobiles tels que des ventilateurs.
- Maintenir fermés et verrouillés les portes, panneaux, recouvrements et dispositifs de protection.
- Seules des personnes qualifiées sont autorisées à enlever les portes, panneaux, recouvrements ou dispositifs de protection pour l'entretien.
- Remettre les portes, panneaux, recouvrements ou dispositifs de protection quand l'entretien est terminé et avant de rebrancher l'alimentation électrique.

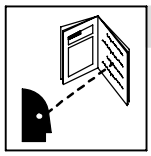

LIRE LES INSTRUCTIONS.

- Lire le manuel d'utilisation avant d'utiliser ou d'intervenir sur l'appareil.
- Utiliser uniquement des pièces de rechange Miller/Hobart.

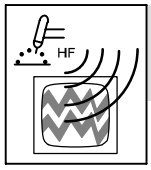

LE RAYONNEMENT HAUTE FRÉQUENCE (HF) risque de provoquer des interférences.

- Le rayonnement haute fréquence (HF) peut provoquer des interférences avec les équipements de radio-navigation et de communication, les services de sécurité et les ordinateurs.
- Demander seulement à des personnes qualifiées familiarisées avec des équipements électroniques de faire fonctionner l'installation.
- L'utilisateur est tenu de faire corriger rapidement par un électricien qualifié les interférences résultant de l'installation.
- Si le FCC signale des interférences, arrêter immédiatement l'appareil.
- Effectuer régulièrement le contrôle et l'entretien de l'installation.
- Maintenir soigneusement fermés les portes et les panneaux des sources de haute fréquence, maintenir les éclateurs à une distance correcte et utiliser une terre et un blindage pour réduire les interférences éventuelles.

LE SOUDAGE À L'ARC risque de provoquer des interférences.

- L'énergie électromagnétique peut gêner le fonctionnement d'appareils électroniques comme des ordinateurs et des robots.
- Veiller à ce que tout l'équipement de la zone de soudage soit compatible électromagnétiquement.
- Pour réduire la possibilité d'interférence, maintenir les câbles de soudage aussi courts que possible, les grouper, et les poser aussi bas que possible (ex. par terre).
- Veiller à souder à une distance de 100 mètres de tout équipement électronique sensible.
- Veiller à ce que ce poste de soudage soit posé et mis à la terre conformément à ce mode d'emploi.
- En cas d'interférences après avoir pris les mesures précédentes, il incombe à l'utilisateur de prendre des mesures supplémentaires telles que le déplacement du poste, l'utilisation de câbles blindés, l'utilisation de filtres de ligne ou la pose de protecteurs dans la zone de travail.

2-4. Proposition californienne 65 Avertissements

▲ **Les équipements de soudage et de coupage produisent des fumées et des gaz qui contiennent des produits chimiques dont l'État de Californie reconnaît qu'ils provoquent des malformations congénitales et, dans certains cas, des cancers. (Code de santé et de sécurité de Californie, chapitre 25249.5 et suivants)**

▲ **Les batteries, les bornes et autres accessoires contiennent du plomb et des composés à base de plomb, produits chimiques dont l'État de Californie reconnaît qu'ils provoquent des cancers et des malformations congénitales ou autres problèmes de procréation. Se laver les mains après manipulation.**

Pour les moteurs à essence :

▲ **Les gaz d'échappement des moteurs contiennent des produits chimiques dont l'État de Californie reconnaît qu'ils provoquent des cancers et des malformations congénitales ou autres problèmes de procréation.**

Pour les moteurs diesel :

▲ **Les gaz d'échappement des moteurs diesel et certains de leurs composants sont reconnus par l'État de Californie comme provoquant des cancers et des malformations congénitales ou autres problèmes de procréation.**

2-5. Principales normes de sécurité

Safety in Welding, Cutting, and Allied Processes, ANSI Standard Z49.1, de Global Engineering Documents (téléphone : 1-877-413-5184, site Internet : www.global.ihs.com).

Recommended Safe Practices for the Preparation for Welding and Cutting of Containers and Piping, American Welding Society Standard AWS F4.1 de Global Engineering Documents (téléphone : 1-877-413-5184, site Internet : www.global.ihs.com).

National Electrical Code, NFPA Standard 70, de National Fire Protection Association, P.O. Box 9101, 1 Battery March Park, Quincy, MA 02269-9101 (téléphone : 617-770-3000, site Internet : www.nfpa.org).

Safe Handling of Compressed Gases in Cylinders, CGA Pamphlet P-1, de Compressed Gas Association, 1735 Jefferson Davis Highway, Suite 1004, Arlington, VA 22202-4102 (téléphone : 703-412-0900, site Internet : www.cganet.com).

Code for Safety in Welding and Cutting, CSA Standard W117.2, de Canadian Standards Association, Standards Sales, 178 Rexdale Boulevard, Rexdale, Ontario, Canada M9W 1R3 (téléphone : 800-463-6727 ou à Toronto 416-747-4044, site Internet : www.csa-international.org).

Practice For Occupational And Educational Eye And Face Protection, ANSI Standard Z87.1, de American National Standards Institute, 11 West 42nd Street, New York, NY 10036-8002 (téléphone : 212-642-4900, site Internet : www.ansi.org).

Standard for Fire Prevention During Welding, Cutting, and Other Hot Work, NFPA Standard 51B, de National Fire Protection Association, P.O. Box 9101, 1 Battery March Park, Quincy, MA 02269-9101 (téléphone : 617-770-3000, site Internet : www.nfpa.org).

OSHA, Occupational Safety and Health Standards for General Industry, Title 29, Code of Federal Regulations (CFR), Part 1910, Subpart Q, and Part 1926, Subpart J, de U.S. Government Printing Office, Superintendent of Documents, P.O. Box 371954, Pittsburgh, PA 15250 (il y a 10 bureaux régionaux––le téléphone de la région 5, Chicago, est 312-353-2220, site Internet : www.osha.gov).

2-6. Information EMF

Considérations sur le soudage et les effets de basse fréquence et des champs magnétiques et électriques.

Le courant de soudage, pendant son passage dans les câbles de soudage, causera des champs électromagnétiques. Il y a eu et il y a encore un certain souci à propos de tels champs. Cependant, après avoir examiné plus de 500 études qui ont été faites pendant une période de recherche de 17 ans, un comité spécial ruban bleu du National Research Council a conclu : « L'accumulation de preuves, suivant le jugement du comité, n'a pas démontré que l'exposition aux champs magnétiques et champs électriques à haute fréquence représente un risque à la santé humaine ». Toutefois, des études sont toujours en cours et les preuves continuent à être examinées. En attendant que les conclusions finales de la recherche soient établies, il vous serait souhaitable de réduire votre exposition aux champs électromagnétiques pendant le soudage ou le coupage.

Pour réduire les champs magnétiques sur le poste de travail, appliquer les procédures suivantes :

1. Maintenir les câbles ensemble en les tordant ou en les enveloppant.
2. Disposer les câbles d'un côté et à distance de l'opérateur.
3. Ne pas courber pas et ne pas entourer pas les câbles autour de votre corps.
4. Garder le poste de soudage et les câbles le plus loin possible de vous.
5. Connecter la pince sur la pièce aussi près que possible de la soudure.

En ce qui concerne les stimulateurs cardiaques

Les porteurs de stimulateur cardiaque doivent consulter leur médecin avant de souder ou d'approcher des opérations de soudage. Si le médecin approuve, il est recommandé de suivre les procédures précédentes.

SECTION 3 – SPECIFICATIONS

3-1. Specifications

A. 115 VAC Model

Rated Welding Output	Amperage Range		Maximum Open-Circuit Voltage DC	Amperes Input at Rated Load Output 115 V, 60 Hz, Single-Phase	KVA	KW	Weight W/ Gun	Overall Dimensions
90 A @ 18 Volts DC, 20% Duty Cycle 63 A @ 21 Volts DC, 20% Duty Cycle*	30 – 135		28	20 15*	2.88 2.20*	2.40 1.77*	60 lb (27 kg)	Length: 17-1/2 in (444 mm) Width: 10-5/8 in (273 mm) Height: 15-3/4 in (400 mm)
Wire Type And Dia	**Solid**	**Stainless**	**Flux Cored**	**Wire Feed Speed Range**				
	.024 - .030 in (0.6 - 0.8 mm)	.023 - .030 in (0.6 - 0.8 mm)	.030 - .035 in (0.8 - 0.9 mm)	40 – 620 IPM (1.0 – 15.7 m/min) At No Load 20 – 600 IPM (0.5 – 15.2 m/min) Feeding Wire				
*** CSA Rating**								

B. 230 VAC Model

Rated Welding Output	Amperage Range	Maximum Open-Circuit Voltage DC	Amperes Input at Rated Load Output 230 V, 60 Hz, Single-Phase	KVA	KW	Weight W/ Gun	Overall Dimensions
130 A @ 20 Volts DC, 30% Duty Cycle At 60 Hz Input	30 – 175	30	19.5	4.60	3.75	73 lb (33.0 kg)	Length: 17-1/2 in (444 mm) Width: 10-5/8 in (273 mm) Height: 15-3/4 in (400 mm)
Wire Type And Dia	**Solid/ Stainless**	**Flux Cored**	**Wire Feed Speed Range**				
	.024 – .035 in (0.6 – 0.9 mm)	.030 – .045 in (0.8 – 1.2 mm)	40 – 720 IPM (1.0 – 18.3 m/min) At No Load 20 – 700 IPM (0.5 – 17.8 m/min) Feeding Wire				

3-2. Duty Cycle And Overheating

A. 115 VAC Model

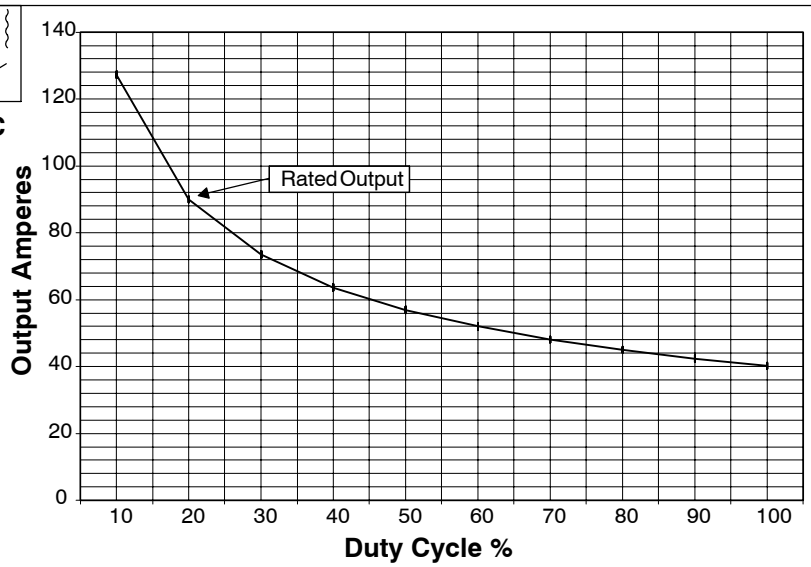

Duty Cycle is percentage of 10 minutes that unit can weld at rated load without overheating.

If unit overheats, thermostat(s) opens, output stops, and cooling fan runs. Wait fifteen minutes for unit to cool. Reduce amperage or duty cycle before welding.

▲ **Exceeding duty cycle can damage unit or gun and void warranty.**

20% duty cycle at 90 amps

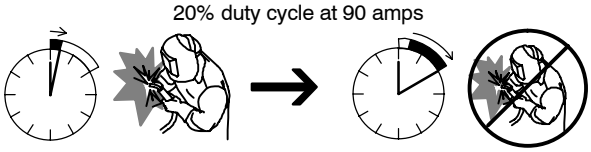

2 Minutes Welding 8 Minutes Resting

B. 230 VAC Model

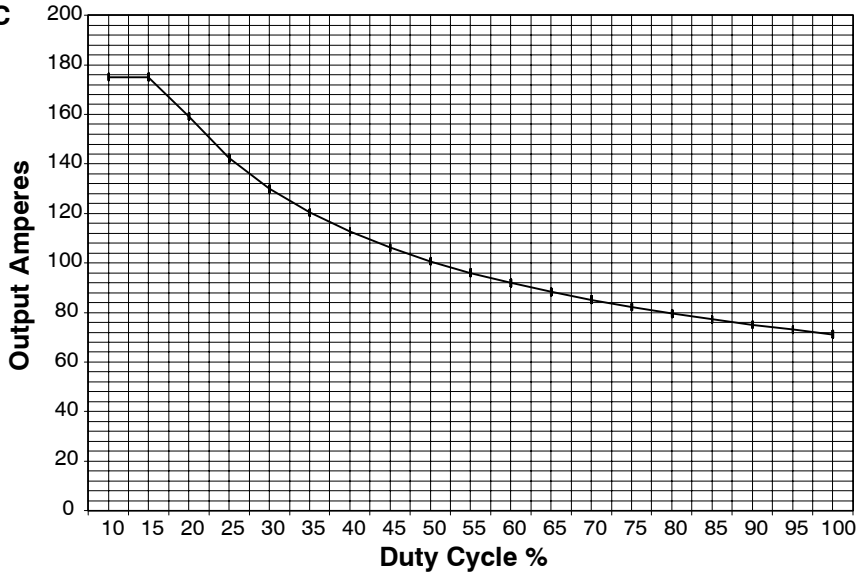

30% duty cycle at 130 amps, 60 Hz
20% duty cycle at 130 amps, 50 Hz

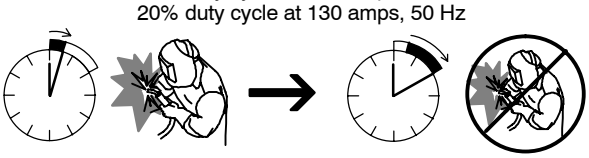

3 Minutes Welding 7 Minutes Resting

Overheating

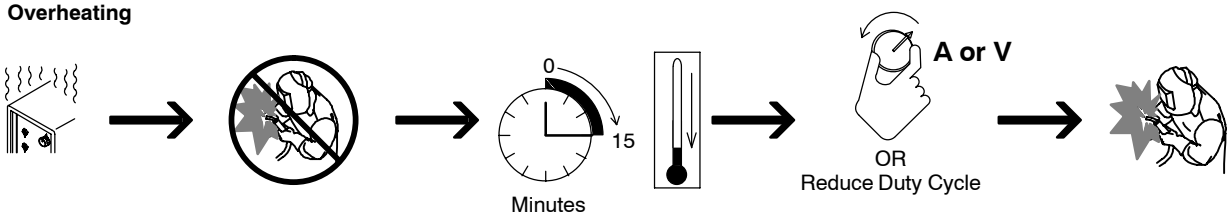

duty1 4/95 – 203 771 / 203 796

3-3. Volt-Ampere Curves

A. 115 VAC Model

The volt-ampere curves show the minimum and maximum voltage and amperage output capabilities of the welding power source. Curves of other settings fall between the curves shown.

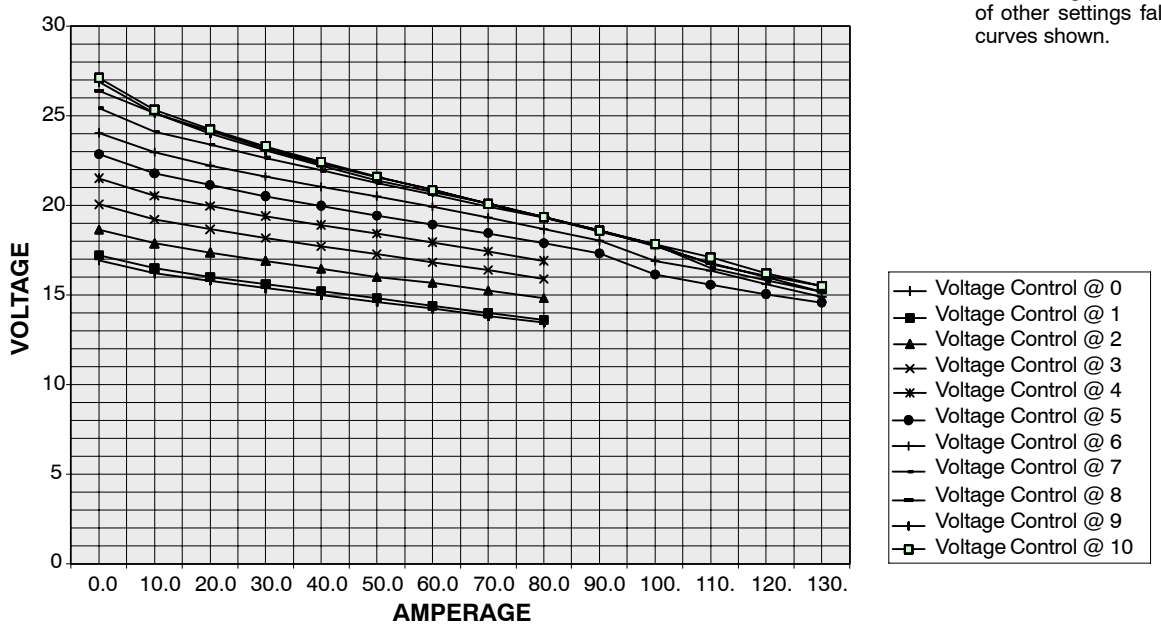

B. 230 VAC Model

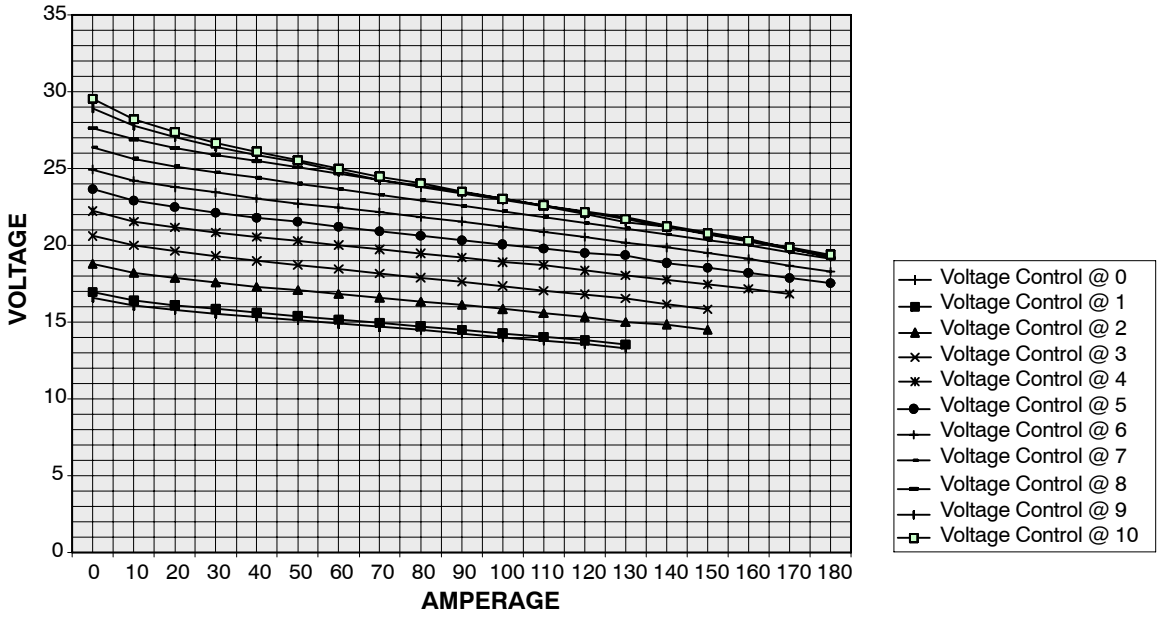

203 772 / 203 797

4-1. Installing Welding Gun

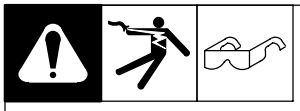

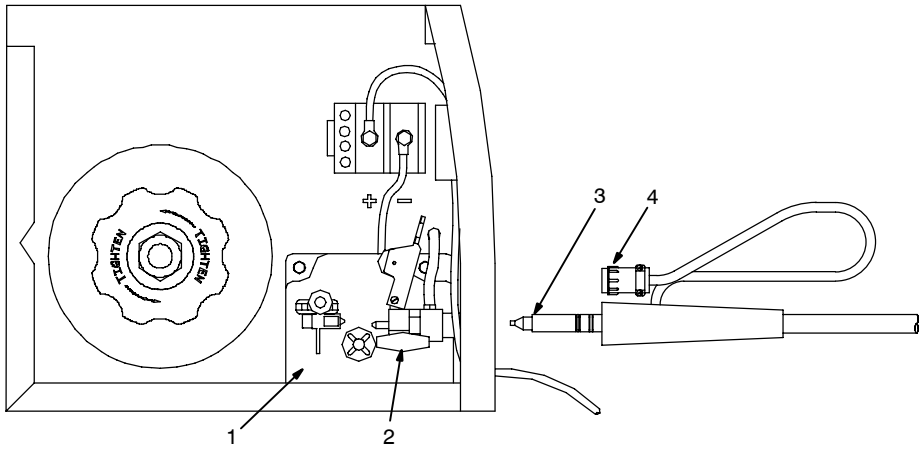

1 Drive Assembly

2 Gun Securing Knob

3 Gun End

Loosen knob. Insert gun end through opening until it bottoms against drive assembly. Tighten knob.

4 Gun Trigger Plug

Insert into receptacle, and tighten threaded collar.

Close door.

Ref. 802 982-A / Ref. 801 987

4-2. Installing Work Clamp

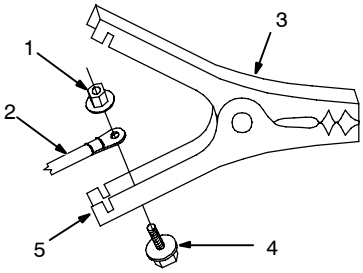

1 Nut

2 Work Cable From Unit

3 Work Clamp

4 Screw

5 Work Clamp Tabs

Bend tabs around work cable.

Tools Needed:

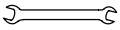

3/8, 7/16 in

802 456

4-3. Work Cable Routing Inside Unit

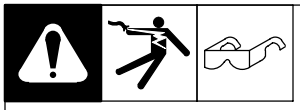

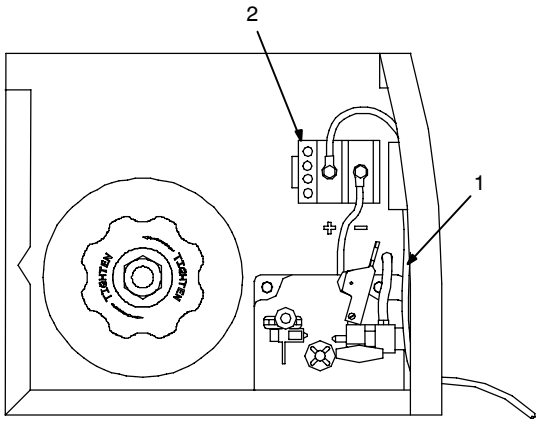

1 Work Cable

2 Output Terminal Block

Insert work cable through opening in front panel and route along back of front panel to output terminal block.

Close door.

Ref. 802 982-A

4-4. Process/Polarity Table

Process	Polarity	Cable Connections	
		Cable To Gun	Cable To Work
GMAW – Solid wire with shielding gas	DCEP – Reverse polarity	Connect to positive (+) output terminal	Connect to negative (–) output terminal
FCAW – Self-shielding wire – no shielding gas	DCEN – Straight Polarity	Connect to negative (–) output terminal	Connect to positive (+) output terminal

4-5. Changing Polarity

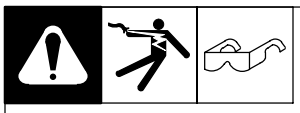

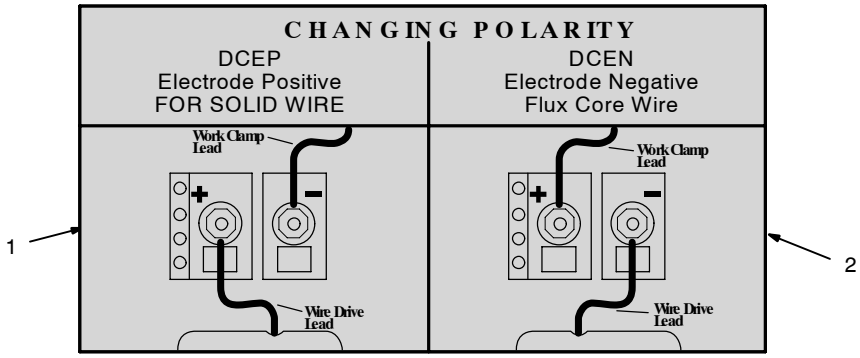

1 Lead Connections For Direct Current Electrode Positive (DCEP)

2 Lead Connections For Direct Current Electrode Negative (DCEN)

Always read and follow wire manufacturer's recommended polarity, and see Section 4-4.

Close door.

Ref. 203 501

4-6. Installing Gas Supply

☞ *DO NOT use Argon/Mixed gas regulator/flowmeter with CO_2 shielding gas. See Parts List for optional CO_2 gas regulator/flowmeter and hose.*

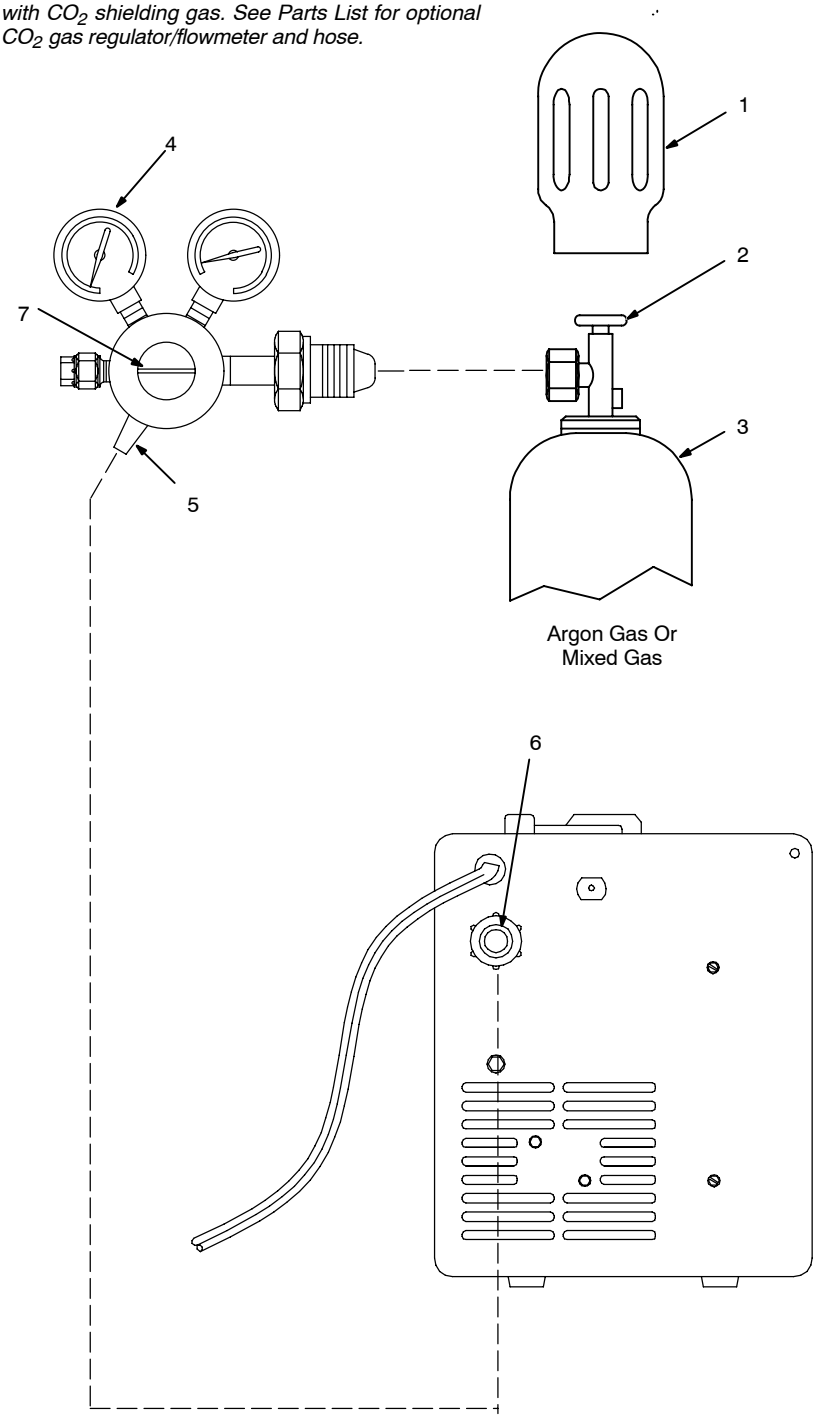

Obtain gas cylinder and chain to running gear, wall, or other stationary support so cylinder cannot fall and break off valve.

1 Cap

2 Cylinder Valve

Remove cap, stand to side of valve, and open valve slightly. Gas flow blows dust and dirt from valve. Close valve.

3 Cylinder

4 Regulator/Flowmeter

Install so face is vertical.

5 Regulator/Flowmeter Gas Hose Connection

6 Welding Power Source Gas Hose Connection

Connect supplied gas hose between regulator/flowmeter gas hose connection, and fitting on rear of welding power source.

7 Flow Adjust

Typical flow rate is 20 cfh (cubic feet per hour). Check wire manufacturer's recommended flow rate.

Tools Needed:

5/8, 1-1/8 in

Ref. 802 028 / 802 441

4-7. Selecting A Location And Connecting Input Power For 115 VAC Model

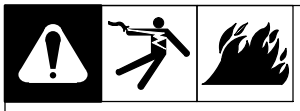

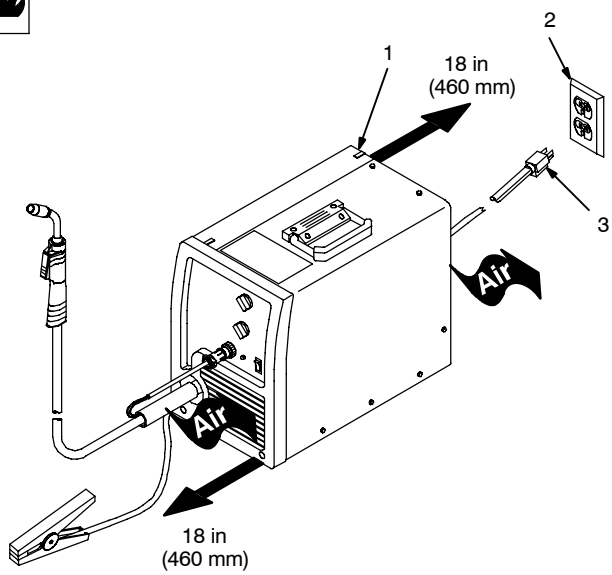

1 Rating Label

2 Grounded Receptacle

A 115 volt, 20 ampere individual branch circuit protected by time-delay fuses or circuit breaker is required.

3 Plug From Unit

Select extension cord of 14 AWG for up to 50 ft (15 m) or 12 AWG for 50 up to 200 ft (61 m).

▲ **Special installation may be required where gasoline or volatile liquids are present – see NEC Article 511 or CEC Section 20.**

Ref. 802 980

4-8. Selecting A Location And Connecting Input Power For 230 VAC Model

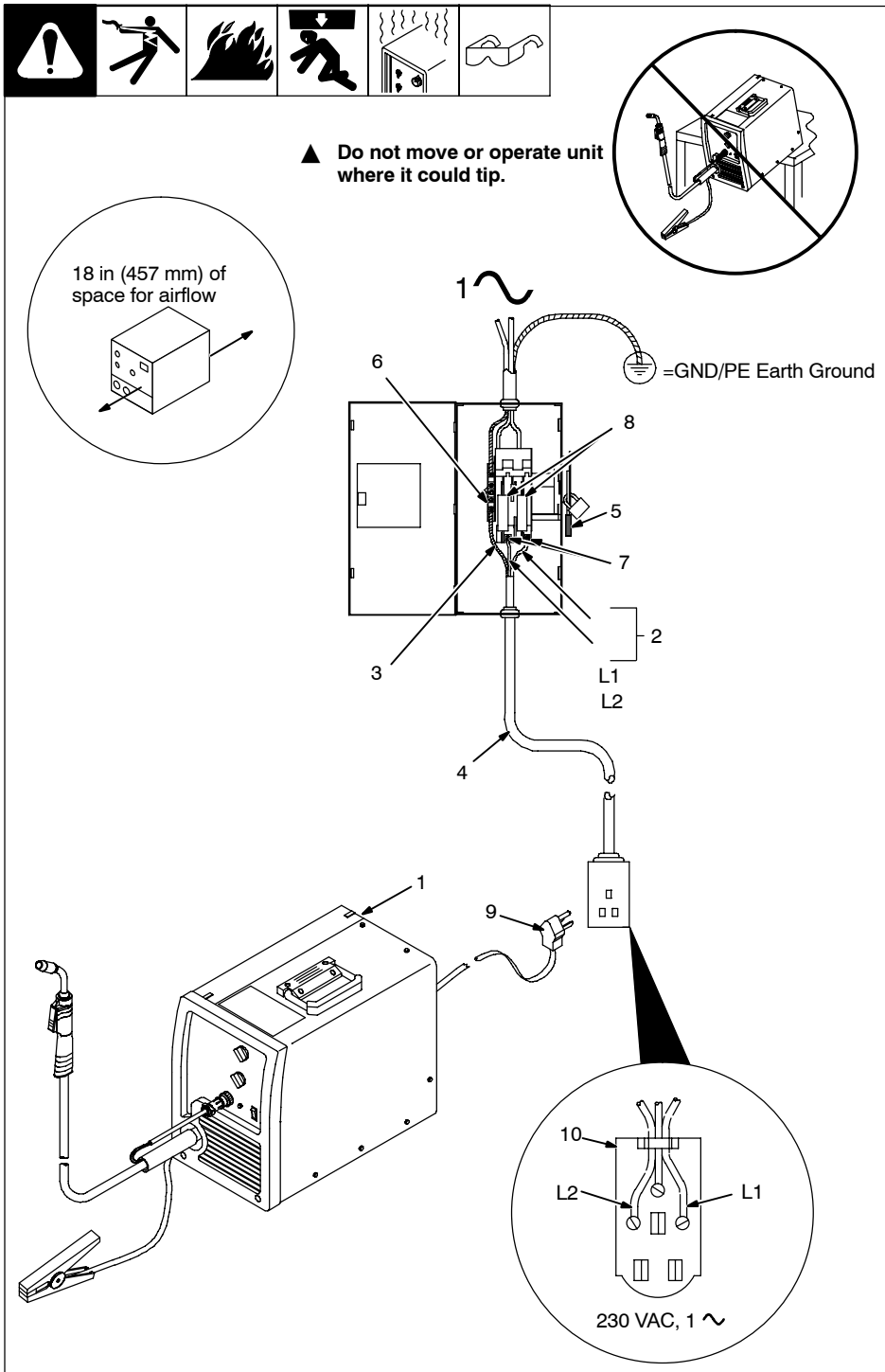

Tools Needed:

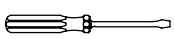

▲ **Installation must meet all National and Local Codes – have only qualified persons make this installation.**

▲ **Disconnect and lockout/tagout input power before connecting input conductors from unit.**

▲ **Always connect green or green/yellow conductor to supply grounding terminal first, and never to a line terminal.**

1 Rating Label

Supply correct input power.

2 Black And White Input Conductor (L1 And L2)

3 Green Or Green/Yellow Grounding Conductor

4 Input Power Cord.

5 Disconnect Device (switch shown in the OFF position)

6 Disconnect Device Grounding Terminal

7 Disconnect Device Line Terminals

Connect green or green/yellow grounding conductor to disconnect device grounding terminal first.

Connect input conductors L1 and L2 to disconnect device line terminals.

8 Over-Current Protection

Select type and size of over-current protection using Section 4-9 (fused disconnect switch shown).

Close and secure door on disconnect device. Remove lockout/tagout device, and place switch in the On position.

9 Plug (NEMA 6-50P)

10 Receptacle (NEMA 6-50R)

Connect plug to receptacle.

▲ **Special installation may be required where gasoline or volatile liquids are present – see NEC Article 511 or CEC Section 20.**

802 980 / Ref. 802 443 / Ref. 802 085 / 803 766-B

4-9. Electrical Service Guide For 230 VAC Model

	60 Hz Single Phase
Input Voltage	230
Input Amperes At Rated Output	20
Max Recommended Standard Fuse Rating In Amperes	
Circuit Breaker [1], Time-Delay [2]	25
Normal Operating [3]	30
Min Input Conductor Size In AWG [4]	14
Max Recommended Input Conductor Length In Feet (Meters)	67 (20)
Min Grounding Conductor Size In AWG [4]	14

Reference: 2005 National Electrical Code (NEC) (including article 630)

1 Choose a circuit breaker with time-current curves comparable to a Time Delay Fuse.

2 “Time-Delay” fuses are UL class “RK5” .

3 “Normal Operating” (general purpose - no intentional delay) fuses are UL class “K5” (up to and including 60 amp), and UL class “H” (65 amp and above).

4 Conductor data in this section specifies conductor size (excluding flexible cord or cable) between the panelboard and the equipment per NEC Table 310.16. If a flexible cord or cable is used, minimum conductor size may increase. See NEC Table 400.5(A) for flexible cord and cable requirements.

▲ **Caution: Failure to follow these fuse and circuit breaker recommendations could create an electric shock or fire hazard. These recommendations are for a dedicated branch circuit that applies to the rated output and duty cycle of the welding power source.**

4-10. Installing Wire Spool And Adjusting Hub Tension

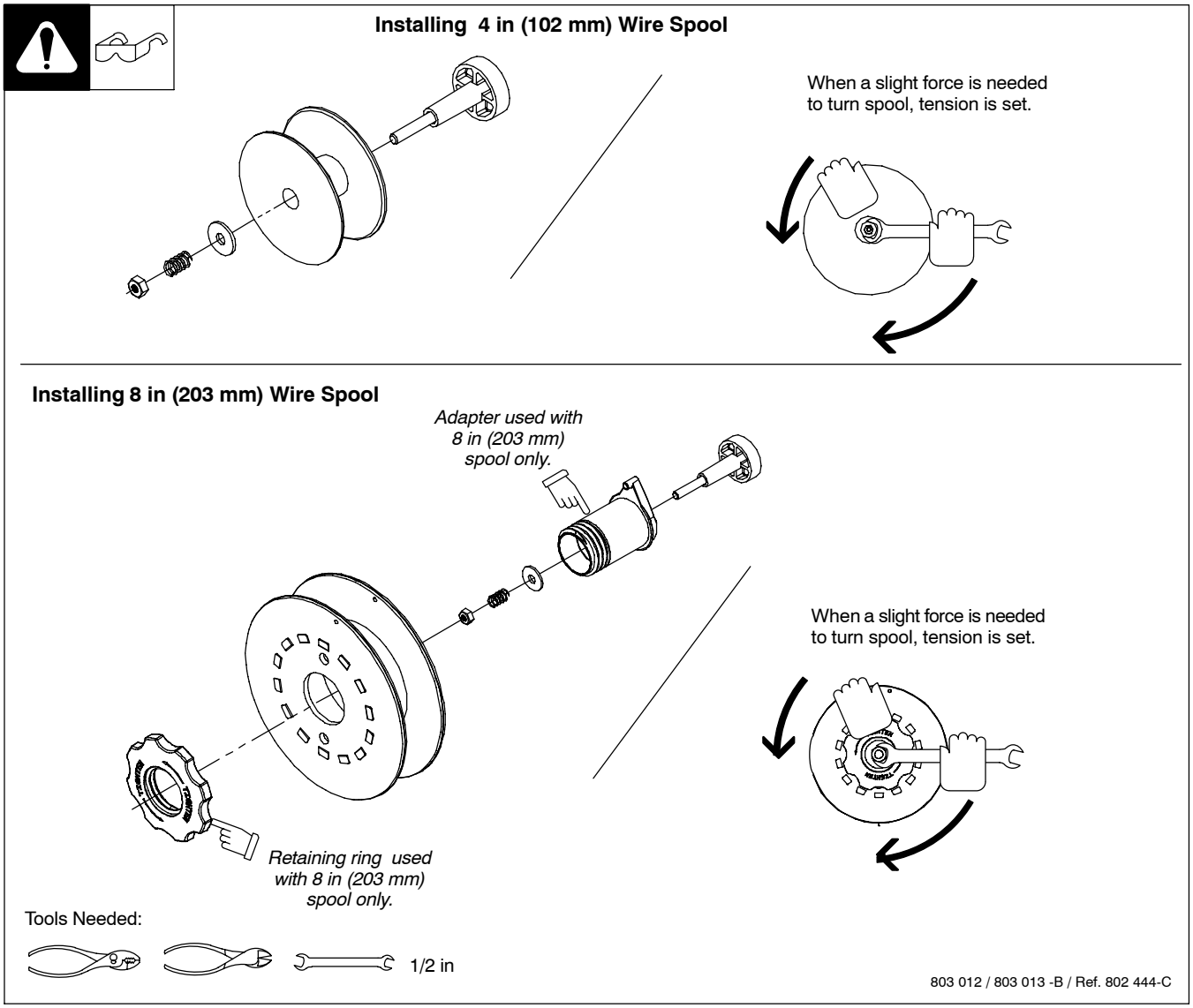

4-11. Threading Welding Wire

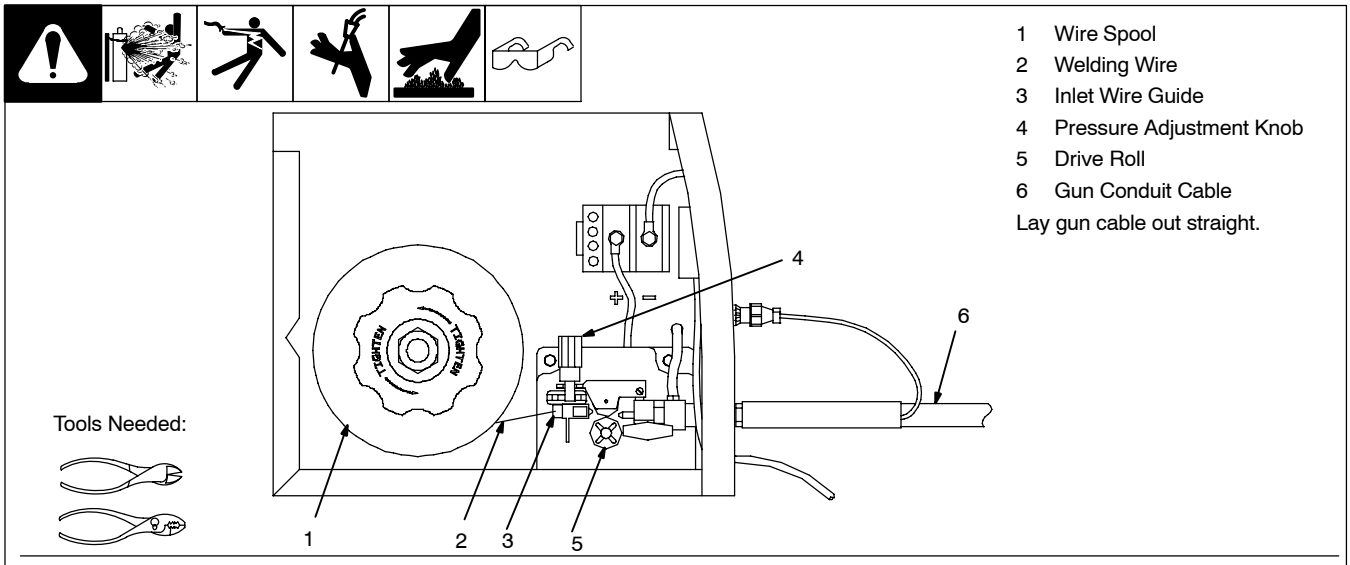

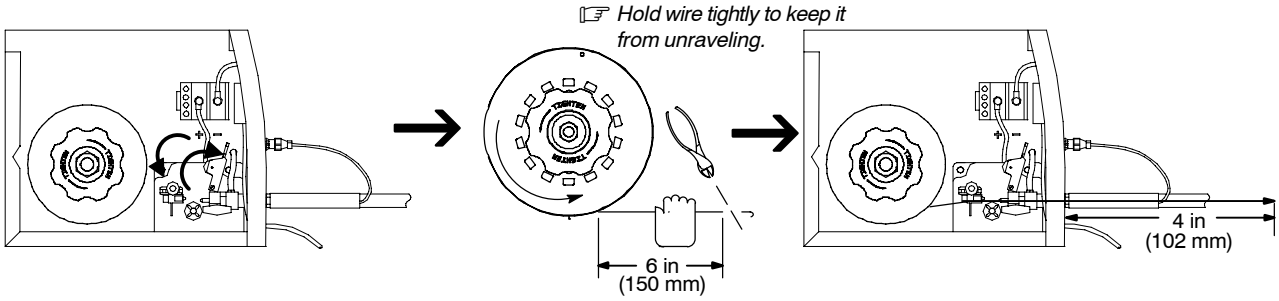

Open pressure assembly.

Pull and hold wire; cut off end.

Push wire thru guides into gun; continue to hold wire.

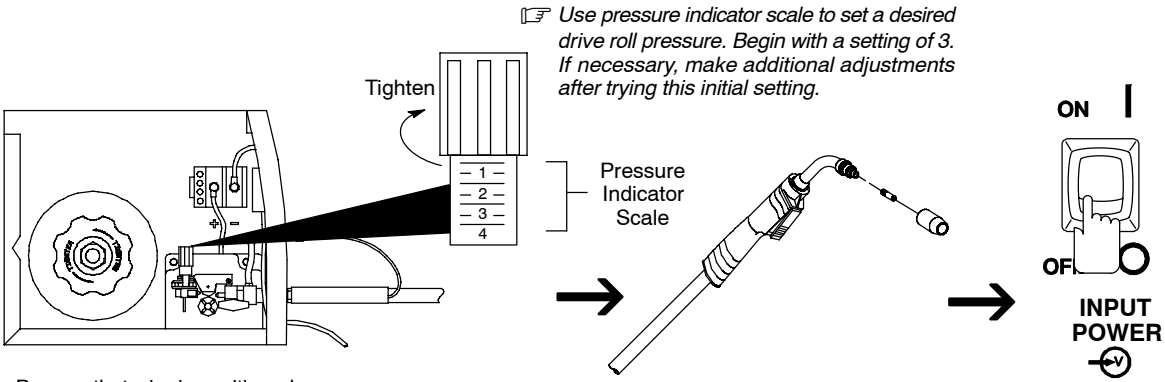

Be sure that wire is positioned in proper feed roll groove. Close and tighten pressure assembly, and let go of wire.

Remove gun nozzle and contact tip.

Turn power on.

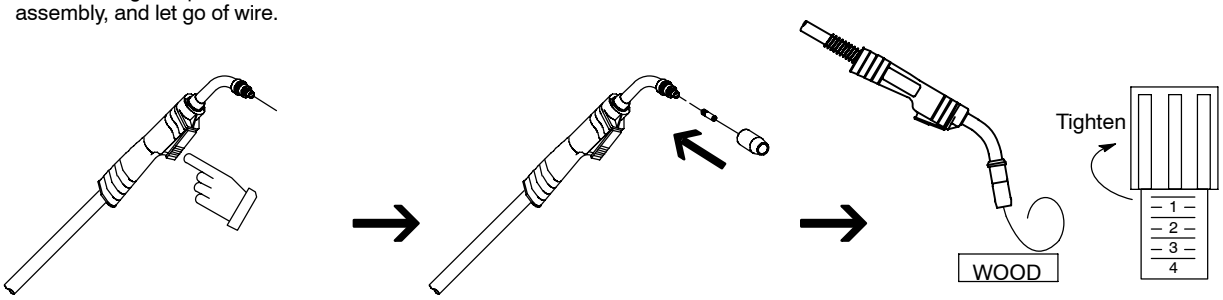

Press gun trigger until wire comes out of gun.

Be sure that tip matches wire diameter. Reinstall contact tip and nozzle.

Feed wire to check drive roll pressure. Tighten knob enough to prevent slipping. Cut off wire. Close door.

Ref. 802 982-A / Ref. 205 837

5-1. Controls

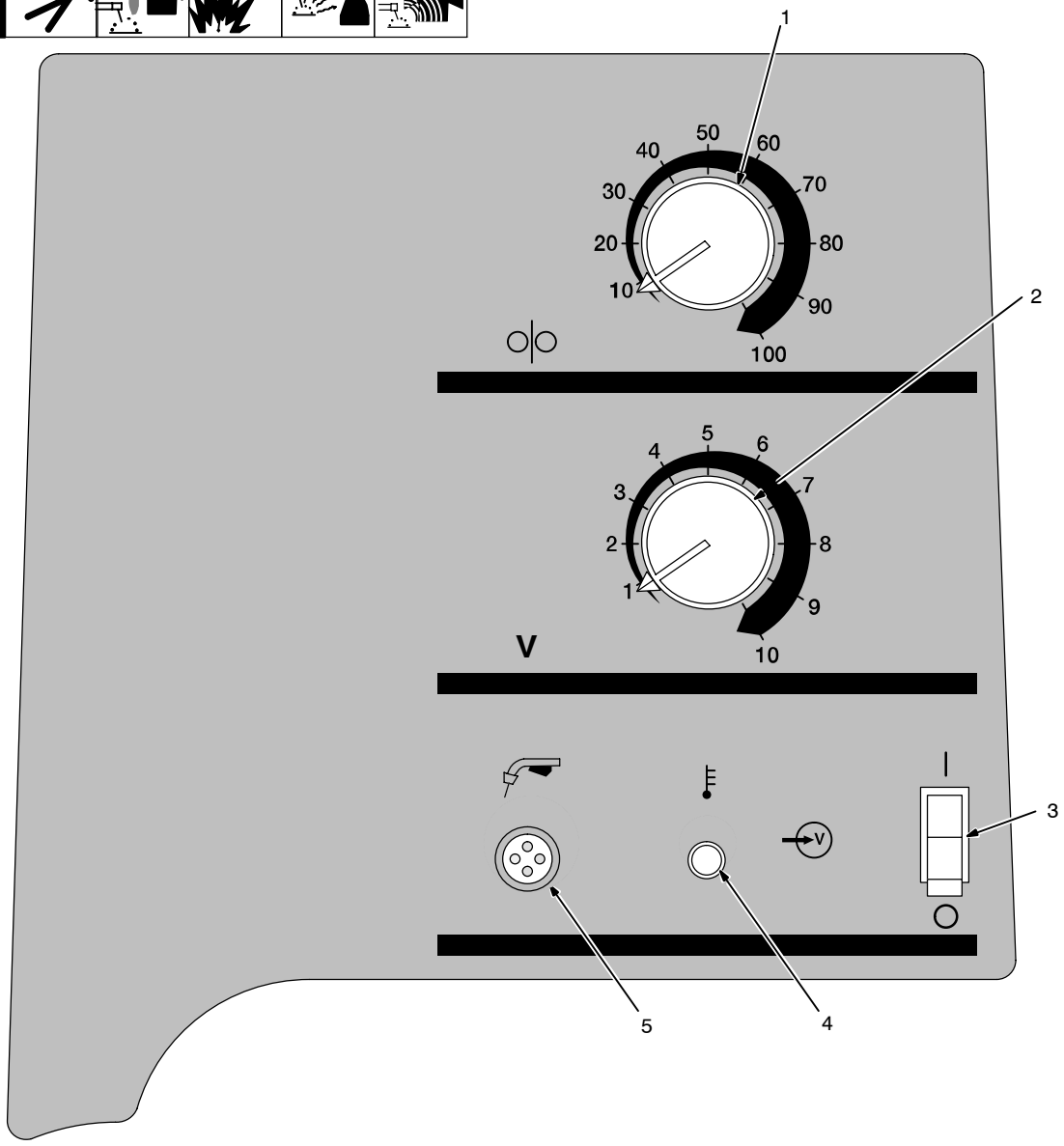

1 Wire Speed Control

Turn control clockwise to increase wire feed speed. (see weld parameter chart in welding power source or Sections 5-2 and 5-3, as applicable).

2 Voltage Control

Turn control clockwise to increase voltage (see weld parameter chart in welding power source or Sections 5-2 and 5-3, as applicable).

3 Power Switch

4 Over Temperature Light

5 Gun Trigger Receptacle

Ref. 203 498

5-2. Weld Parameter Chart For 115 VAC Model

Selecting Wire, Gas and Control Settings

Note: *1. Settings are approximate. Adjust as required.*
2. "--" Means not recommended.
3. Thicker materials can be welded using proper technique, joint preparation and multiple passes.

What Material Are you Welding	Suggested Wire Types, Polarity	Suggested Shielding Gases (Flow Rate of 20–30 cfh)	Wire Sizes (Diameters)
Steel	Solid Wire (or Hard) ER70S–6 (DCEP)	C 25 Gas Mixture 75% Ar / 25% CO_2 (Ar / CO_2 produces less spatter – better overall appearance)	.024" (0.6 mm)
			.030" (0.8 mm)
	Solid Wire (or Hard) ER70S–6 (DCEP)	100% CO_2	.024" (0.6 mm)
			.030" (0.8 mm)
	Flux Core E71T–11 (DCEN)	No Shielding Gas required. Good for windy or outdoor applications.	.030" (0.8 mm)
			.035" (0.9 mm)
Stainless Steel	Stainless Steel (DCEP)	Tri–Mix 90% He / 7.5% Ar / 2.5% CO_2	.024" (0.6 mm)
			.030" (0.8 mm)

Match feedroll groove to diameter of wire being used. Set Tension knob setting to 3 at start. Adjust tension per instructions in the manual.

M–10 (#195605) Torch Consumables:

Nozzles:	Tip Adapter:	Contact Tips:	Liners:
#169715	#169716	.024" (0.6 mm) #087299	.024" (0.6 mm) #194010
		.030" (0.8 mm) #000067	.030 _ .035" (0.8 _ 0.9 mm) #194011
		.035" (0.9 mm) #000068	.035 _ .045" (0.9 _ 1.2 mm) #194012

Quick Change Dual Grooved Drive Rolls:

Wire Diameters	V–Smooth	V–Knurled *
.024" (0.6 mm)	#220179	
.030" (0.8 mm)	#220179	#202926
.035" (0.9 mm)	#220179	#202926

* For Flux Core or Stainless Wire

Select Voltage and Wire Speed Based on Thickness of Metal Being Welded

Number on left of slash is Voltage Knob Setting.

Number on right of slash is Wire Speed Knob Setting.

[redacted]	[redacted]	[redacted]	[redacted]	[redacted]
3/16” (4.8 mm)	1/8” (3.2 mm)	16 ga. (1.6 mm)	20 ga. (0.9 mm)	24 ga. (0.8 mm)
---	10 / 75	4.5 / 60	3 / 45	2 / 40
---	10 / 60	4 / 45	3 / 35	2 / 30
---	10 / 60	5 / 50	4 / 40	---
---	10 / 40	5 / 30	4 / 25	---
10 / 60	6 / 55	2.5 / 45	---	---
10/45	6 / 45	2.5 / 40	---	---
---	10 / 75	6 / 60	4 / 45	---
---	10 / 60	6 / 45	4 / 35	---

208 267

Selecting Wire, Gas and Control Settings

Note: 1. *Settings are approximate. Adjust as required.*
2. *"--" Means not recommended.*
3. *Thicker materials can be welded using proper technique, joint preparation and multiple passes.*

What Material Are you Welding	Suggested Wire Types, Polarity	Suggested Shielding Gases (Flow Rate of 20–30 cfh)	Wire Sizes (Diameters)
Steel	Solid Wire (or Hard) ER70S-6 (DCEP)	C_{25} Gas Mixture 75% Ar / 25% CO_2 (Ar / CO_2 produces less spatter – better overall appearance)	.024" (0.6 mm) .030" (0.8 mm) .035" (0.9 mm)
	Solid Wire (or Hard) ER70S-6 (DCEP)	100% CO_2	.024" (0.6 mm) .030" (0.8 mm) .035" (0.9 mm)
	Flux Core E71T-11 (DCEN)	No Shielding Gas required. Good for windy or outdoor applications.	.030" (0.8 mm) .035" (0.9 mm) .045" (1.2 mm)
Stainless Steel	Stainless Steel (DCEP)	Tri-Mix 90% He / 7.5% Ar / 2.5% CO_2	.024" (0.6 mm) .030" (0.8 mm) .035" (0.9 mm)

Match feedroll groove to diameter of wire being used. Set Tension knob setting to 3 at start. Adjust tension per instructions in the manual.

M-10 (#195605) Torch Consumables:

Nozzles:	Tip Adapter:	Contact Tips:	Liners:
#169715	#169716	.024" (0.6 mm) #087299	.024" (0.6 mm) #194010
		.030" (0.8 mm) #000067	.030 - .035" (0.8 - 0.9 mm) #194011
		.035" (0.9 mm) #000068	.035 - .045" (0.9 - 1.2 mm) #194012
		.045" (1.2 mm) #000069	.035 - .045" (0.9 - 1.2 mm) #194012

Quick Change Dual Grooved Drive Rolls:

Wire Diameters	V-Smooth	V-Knurled *
.024" (0.6 mm)	#220179	
.030" (0.8 mm)	#220179	#202926
.035" (0.9 mm)	#220179	#202926
.045" (1.2 mm)		#202926

* For Flux Core or Stainless Wire

Select Voltage and Wire Speed Based on Thickness of Metal Being Welded

Number on left of slash is Voltage Knob Setting.

Number on right of slash is Wire Speed Knob Setting.

1/4" (6.4 mm)	3/16" (4.8 mm)	1/8" (3.2 mm)	16 ga. (1.6 mm)	20 ga. (0.9 mm)	24 ga. (0.8 mm)
10 / 100	6 / 100	4.5 / 85	3.5 / 70	2.5 / 50	1.5 / 40
10 / 75	6 / 70	4.5 / 60	3 / 45	2 / 35	1.5 / 30
10 / 70	6 / 55	4.5 / 50	3 / 40	1.5 / 30	---
---	10 / 75	6.5 / 70	4 / 40	3 / 25	---
10 / 55	8.5 / 55	6 / 50	4 / 40	3 / 25	---
10 / 45	7.5 / 45	5.5 / 45	3.5 / 35	3 / 20	---
6 / 75	4 / 70	3 / 65	1 / 50	---	---
5.5 / 65	4 / 55	3 / 50	1 / 40	---	---
7.5 / 40	6 / 40	3 / 35	---	---	---
---	10 / 80	6 / 70	4 / 50	2.5 / 50	---
---	10 / 70	6 / 65	4 / 45	2.5 / 35	---
---	10 / 60	6 / 55	3.5 / 35	---	---

208 268

SECTION 6 – MAINTENANCE &TROUBLESHOOTING

6-1. Routine Maintenance

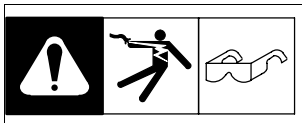

▲ **Disconnect power before maintaining.**

3 Months

Replace unreadable labels.

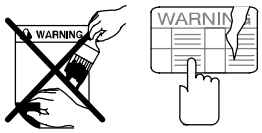

Repair or replace cracked weld cable.

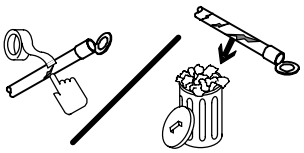

Clean and tighten weld terminals.

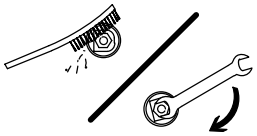

6 Months

Blow out or vacuum inside. During heavy service, clean monthly.

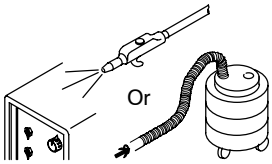

6-2. Overload Protection

1 Supplementary Protector CB1

CB1 protects unit from overload. If CB1 opens, unit shuts down.

Reset supplementary protector.

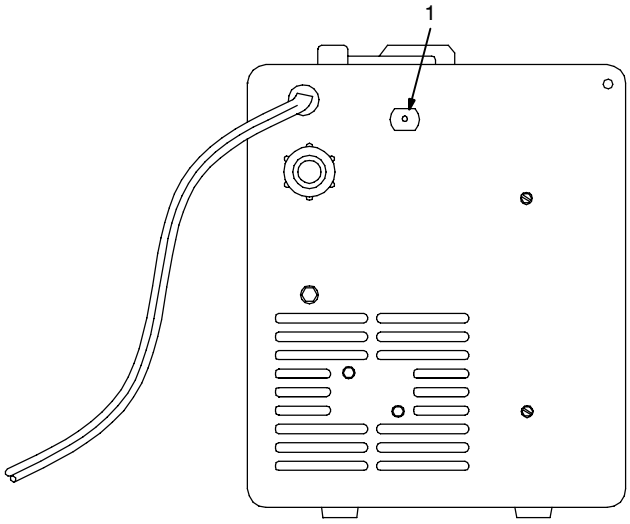

802 441

6-3. Drive Motor Protection And Tip Saver/Short Circuit Protection

A. Drive Motor Protection

Drive motor protection circuit protects drive motor from overload. If drive motor becomes inoperative, release gun trigger and wait until protection circuit resets allowing drive motor to feed wire again.

B. Tip Saver/Short Circuit Protection

The tip saver/short circuit protection extends contact tip life and protects internal components from damage. If contact tip is shorted to workpiece, the unit shuts down the welding output, but the fan continues to run. To resume operation, release gun trigger to reset unit. If the contact tip has stuck to the workpiece, release gun trigger, turn off unit, and remove contact tip from workpiece. Check contact tip and replace if damaged. Turn on unit to continue operation.

6-4. Changing Drive Roll Or Wire Inlet Guide

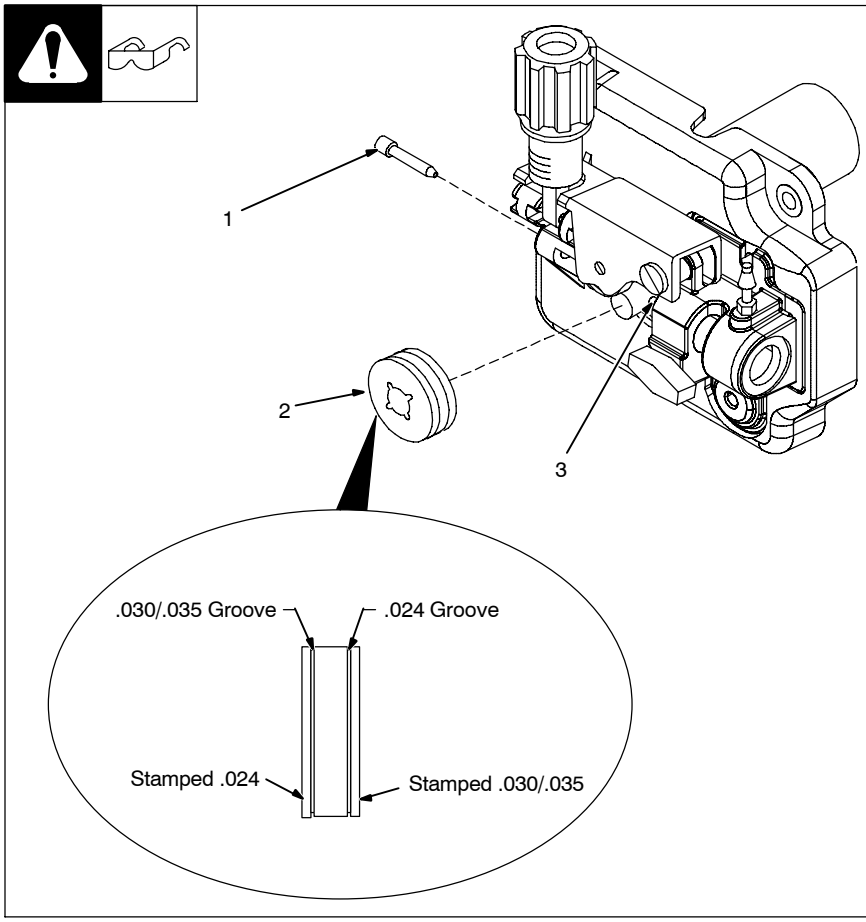

1 Inlet Wire Guide

Remove guide by pressing on barbed area or cutting off one end near housing and pulling it out of hole. Push new guide into hole from rear until it snaps in place.

2 Drive Roll

The drive roll consists of two different sized grooves. The stamped markings on the end surface of the drive roll refers to the groove on the opposite side of the drive roll. The groove closest to the motor shaft is the proper groove to thread (see Section 4-11).

3 Retaining Pin

To secure drive roll, locate open slot and push drive roll completely over retaining pin, then rotate drive roll 1/4 turn to closed slot.

802 984

6-5. Replacing Gun Contact Tip

▲ **Turn Off power before replacing contact tip.**

1 Nozzle

2 Contact Tip

Cut off welding wire at contact tip. Remove nozzle.

Remove contact tip and install new contact tip. Reinstall nozzle.

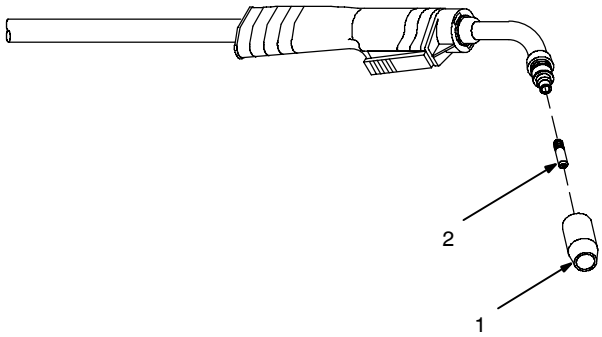

Tools Needed:

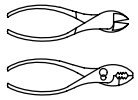

Ref. 802 399-A

6-6. Cleaning Or Replacing Gun Liner

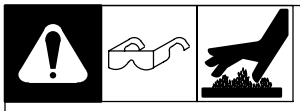

▲ **Disconnect gun from unit.**

Tools Needed:

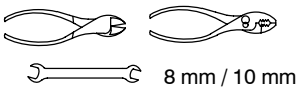

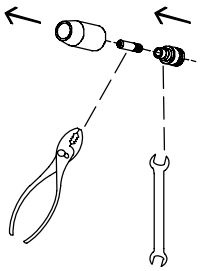

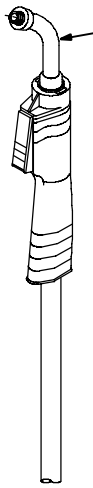

Remove nozzle, contact tip, adapter, gas diffuser, and wire outlet guide.

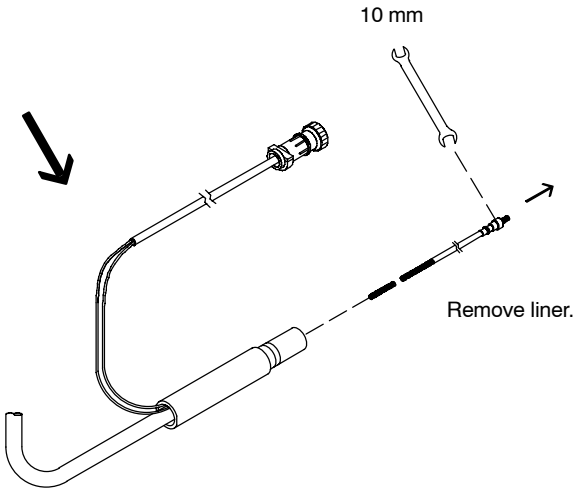

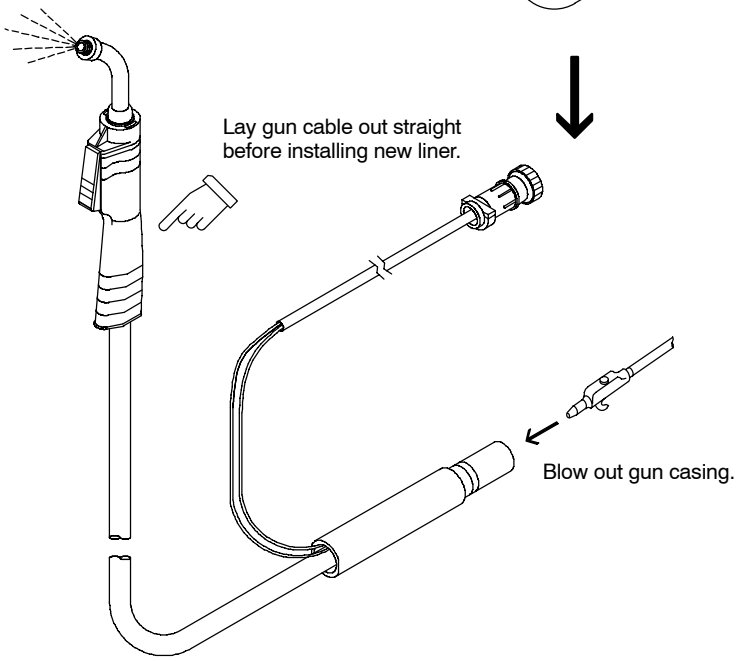

To Reassemble Gun:

Install and tighten new liner.

Cut liner off 3/4 in (20 mm) (3/8 in [9.5 mm] for aluminum) from head tube.

Install adapter, contact tip, and nozzle.

Ref. ST-802 399-A

6-7. Replacing Switch And/Or Head Tube

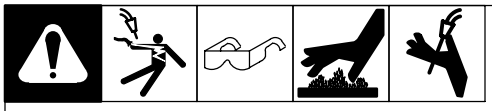

▲ **Turn Off welding power source /wire feeder and disconnect gun.**

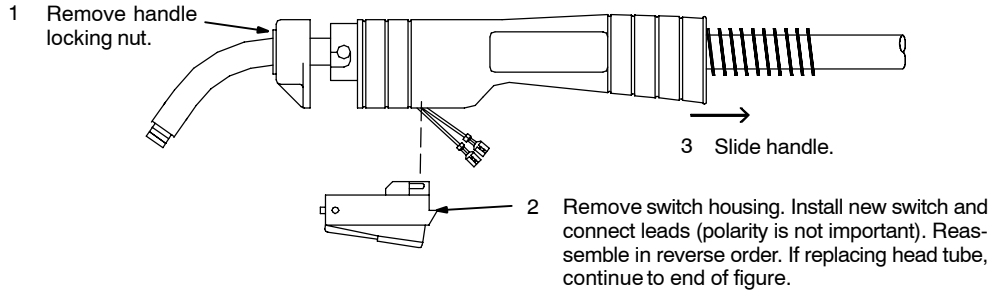

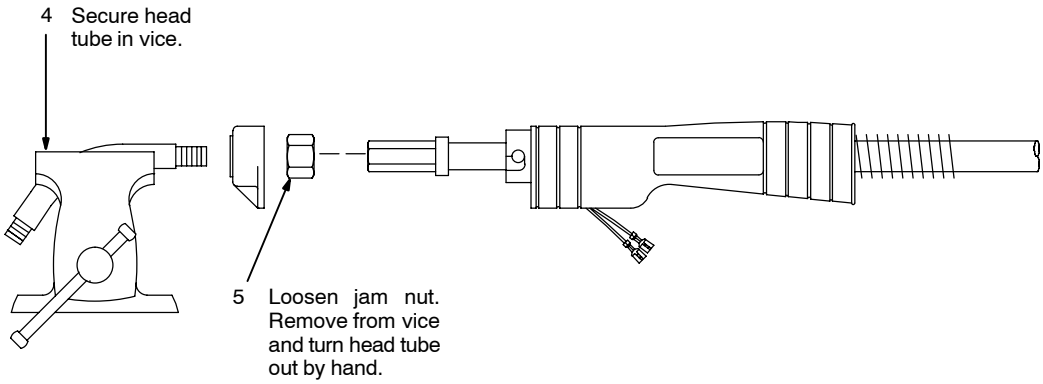

6 Hand-tighten head tube into cable connector.

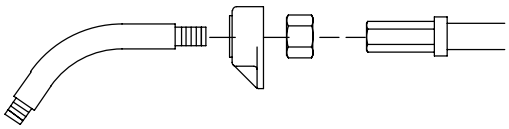

7 Place head tube in vice and tighten until nuts are tight.

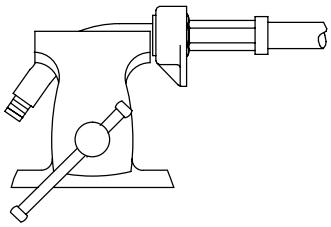

8 Remove from vice. Reposition handle and install switch housing. Secure with handle locking nut.

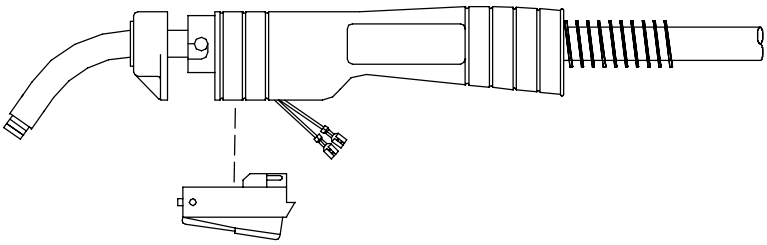

Tools Needed:

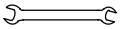

19 mm

Ref. ST-800 795-C

6-8. Troubleshooting Table

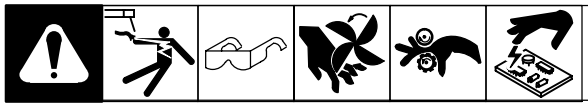

Trouble	Remedy
No weld output; wire does not feed; fan does not run.	Secure power cord plug in receptacle (see Section 4-7).
	Replace building line fuse or reset circuit breaker if open.
	Place Power switch in On position (see Section 5-1).
	Reset welding power source supplementary protector if open.
No weld output; wire does not feed; fan motor continues to run.	Thermostat TP1 open (overheating). Allow fan to run with gun trigger switch off; thermostat closes when unit has cooled (see Section 3-2).
	Secure gun trigger leads (see Section 4-1).
No weld output; wire feeds.	Connect work clamp to get good metal to metal contact.
	Replace contact tip (see Section 6-5).
	Check for proper polarity connections (see Section 4-5).
	Check thumbscrew securing gun end to feed head adapter and tighten if necessary.
Low weld output.	Connect unit to proper input voltage or check for low line voltage.
	Place voltage switch in desired position (see Section 5-1).
Electrode wire feeding stops during welding.	Straighten gun cable and/or replace damaged parts.
	Adjust drive roll pressure (see Section 4-11).
	Change to proper drive roll groove (see Section 6-4).
	Readjust hub tension (see Section 4-10).
	Replace contact tip if blocked (see Section 6-5). Oversized tip may be required for some wires.
	Clean or replace wire inlet guide or liner if dirty or plugged (see Section 6-4 or Section 6-6).
	Replace drive roll or pressure bearing if worn or slipping (see Section 6-4).
	Secure gun trigger leads or repair leads (see Section 4-1).
	Check and clear any restrictions at drive assembly and liner (see Section 4-11 or Section 6-6).
	Release gun trigger and allow gun and motor protection circuitry to reset.
	Have nearest Factory Authorized Service Agent check drive motor.

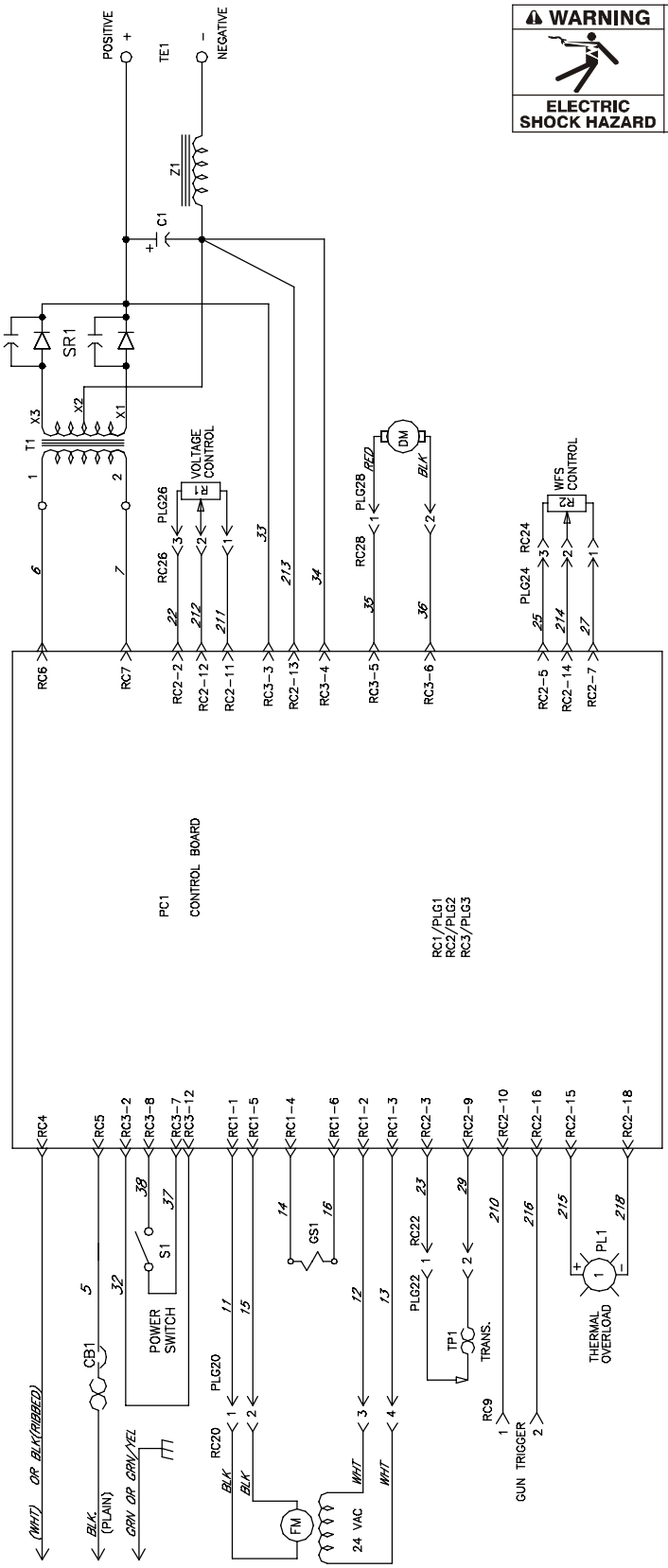

WARNING

ELECTRIC SHOCK HAZARD

- Do not touch live electrical parts.
- Disconnect input power or stop engine before servicing.
- Do not operate with covers removed.
- Have only qualified persons install, use, or service this unit.

203 765

Figure 7-1. Circuit Diagram For 115 VAC Model

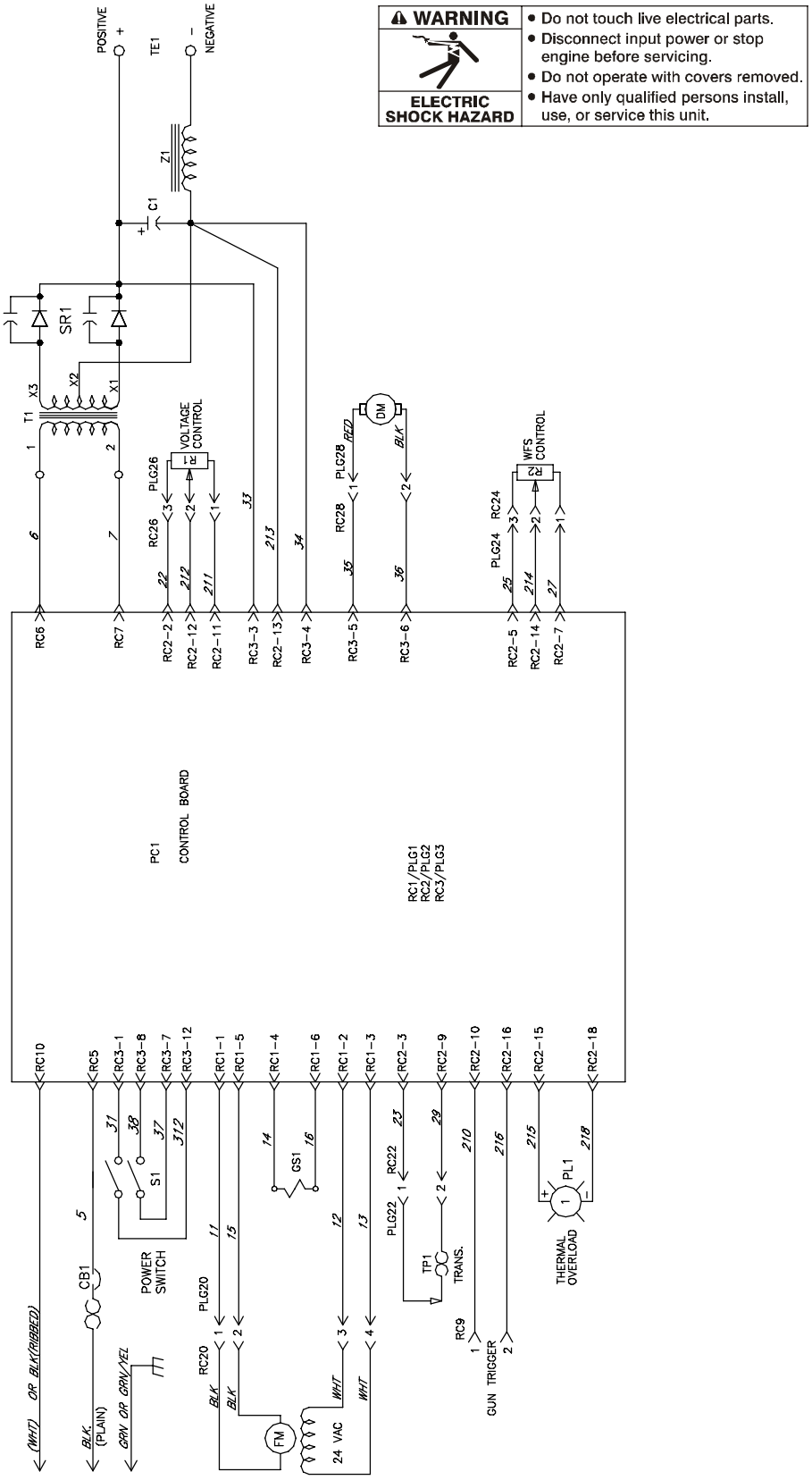

203 794

Figure 7-2. Circuit Diagram For 230 VAC Model

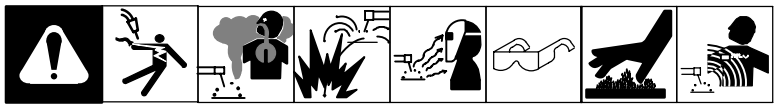

8-1. Typical MIG Process Connections

▲ **Weld current can damage electronic parts in vehicles. Disconnect both battery cables before welding on a vehicle. Place work clamp as close to the weld as possible.**

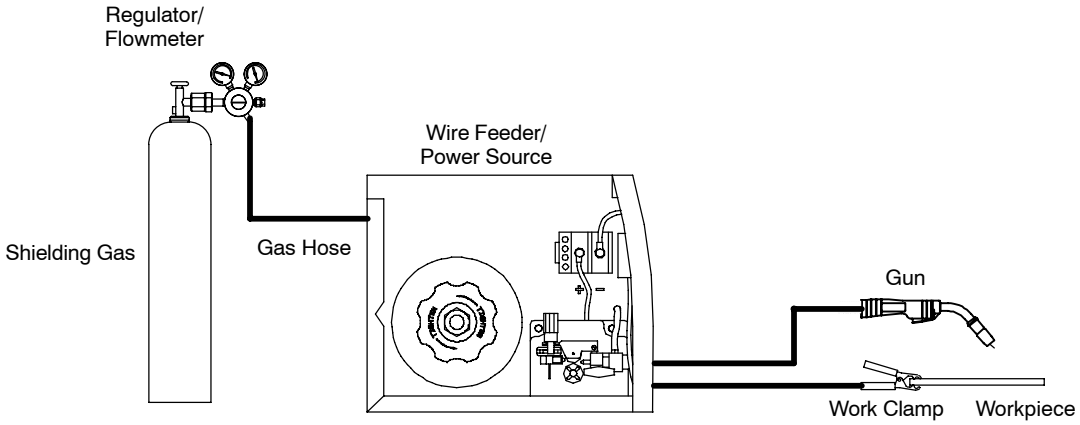

light mig 5/967 / Ref. 802 982-A

8-2. Typical MIG Process Control Settings

NOTE ☞

These settings are guidelines only. Material and wire type, joint design, fitup, position, shielding gas, etc. affect settings. Test welds to be sure they comply to specifications.

Material thickness determines weld parameters.

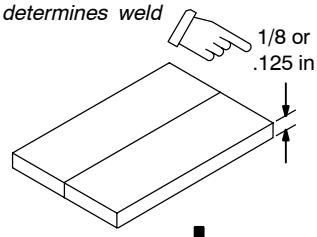

Convert Material Thickness to Amperage (A)

(.001 in = 1 ampere)
.125 in = 125 A

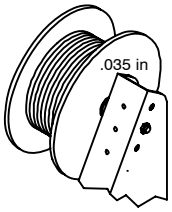

Wire Size	Amperage Range
.023 in	30 – 90 A
.030 in	40 – 145 A
.035 in	50 – 180 A

Select Wire Size

Wire Size	Recommendation	Wire Speed (Approx.)
.023 in	3.5 in per ampere	3.5 x 125 A = 437 ipm
.030 in	2 in per ampere	2 x 125 A = 250 ipm
.035 in	1.6 in per ampere	1.6 x 125 A = 200 ipm

Select Wire Speed (Amperage)

125 A based on 1/8 in material thickness

ipm = inch per minute

Low voltage: wire stubs into work

High voltage: arc is unstable (spatter)

Set voltage midway between high/low voltage.

Select Voltage

Wire speed (amperage) controls weld penetration (wire speed = burn-off rate)

Voltage controls height and width of weld bead.

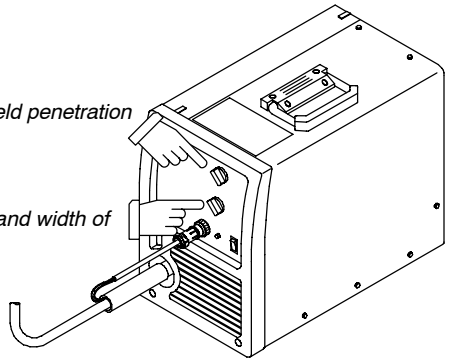

Ref. 802 980

8-3. Holding And Positioning Welding Gun

NOTE ☞

Welding wire is energized when gun trigger is pressed. Before lowering helmet and pressing trigger, be sure wire is no more than 1/2 in (13 mm) past end of nozzle, and tip of wire is positioned correctly on seam.

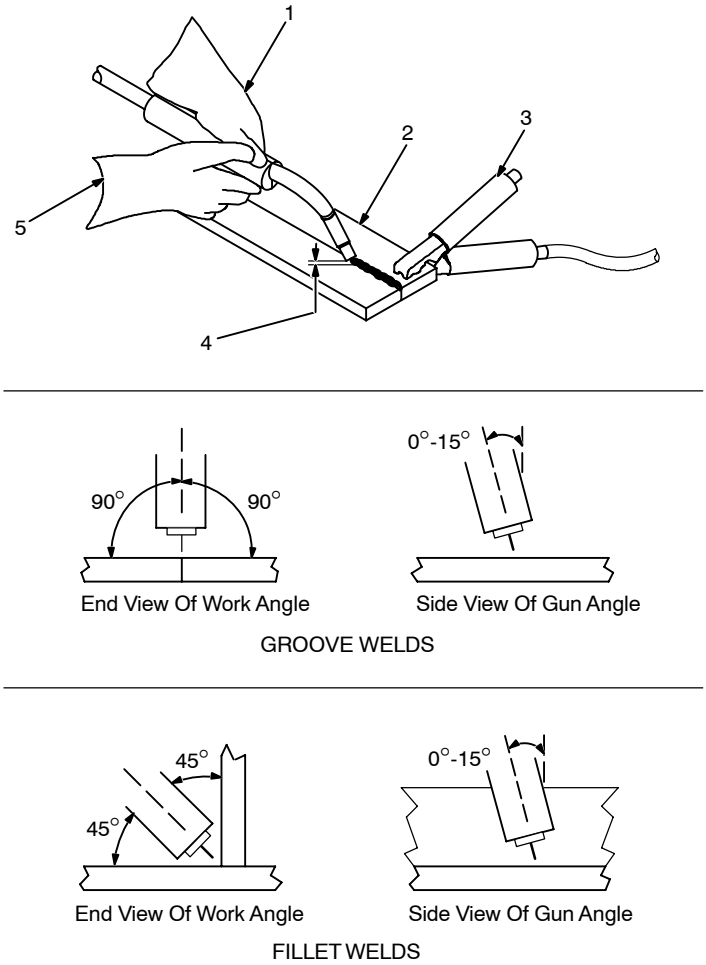

1 Hold Gun and Control Gun Trigger
2 Workpiece
3 Work Clamp
4 Electrode Extension (Stickout) 1/4 to 1/2 in (6 To 13 mm)
5 Cradle Gun and Rest Hand on Workpiece

S-0421-A

8-4. Conditions That Affect Weld Bead Shape

NOTE ☞

Weld bead shape depends on gun angle, direction of travel, electrode extension (stickout), travel speed, thickness of base metal, wire feed speed (weld current), and voltage.

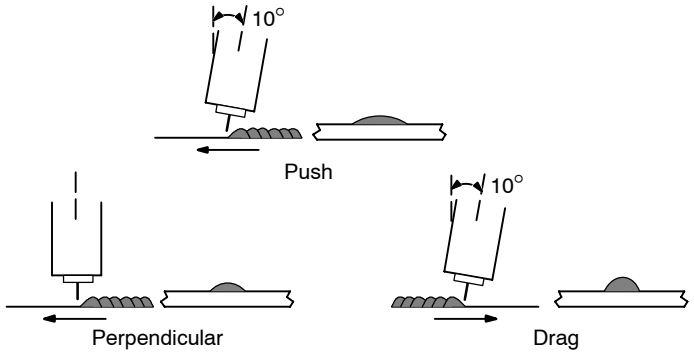

GUN ANGLES AND WELD BEAD PROFILES

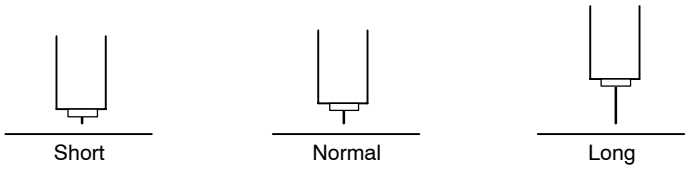

ELECTRODE EXTENSIONS (STICKOUT)

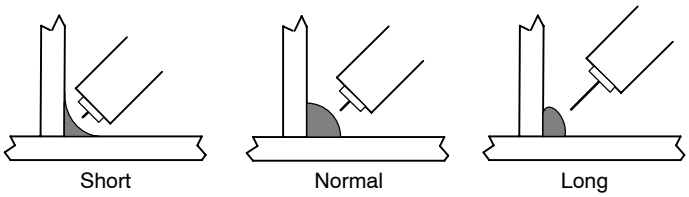

FILLET WELD ELECTRODE EXTENSIONS (STICKOUT)

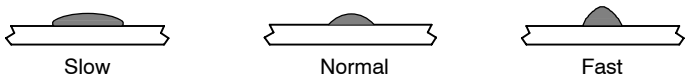

GUN TRAVEL SPEED

S-0634

8-5. Gun Movement During Welding

NOTE ☞

Normally, a single stringer bead is satisfactory for most narrow groove weld joints; however, for wide groove weld joints or bridging across gaps, a weave bead or multiple stringer beads works better.

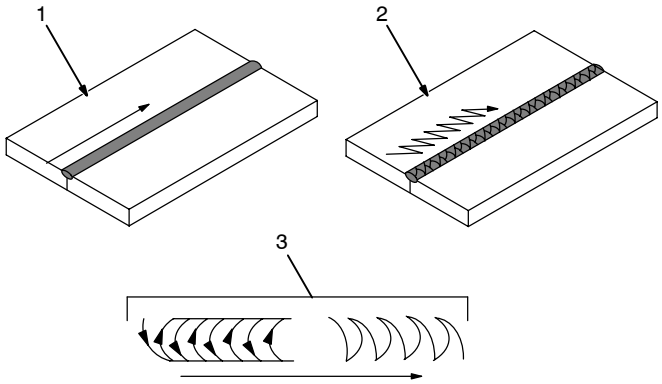

1 Stringer Bead – Steady Movement Along Seam

2 Weave Bead – Side To Side Movement Along Seam

3 Weave Patterns

Use weave patterns to cover a wide area in one pass of the electrode.

S-0054-A

8-6. Poor Weld Bead Characteristics

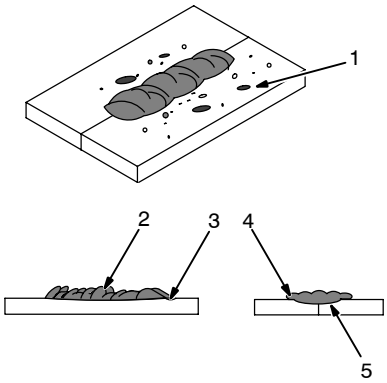

1 Large Spatter Deposits

2 Rough, Uneven Bead

3 Slight Crater During Welding

4 Bad Overlap

5 Poor Penetration

S-0053-A

8-7. Good Weld Bead Characteristics

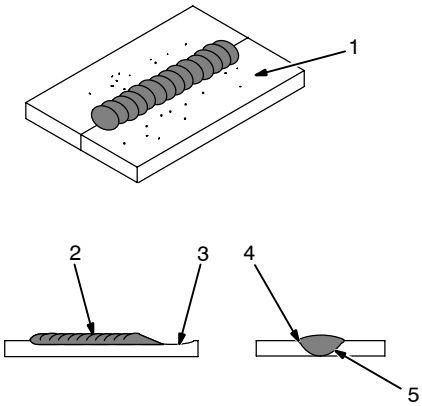

1 Fine Spatter

2 Uniform Bead

3 Moderate Crater During Welding

Weld a new bead or layer for each 1/8 in (3.2 mm) thickness in metals being welded.

4 No Overlap

5 Good Penetration into Base Metal

S-0052-B

8-8. Troubleshooting – Excessive Spatter

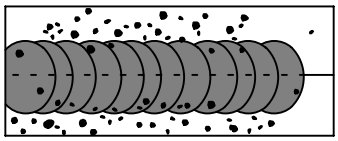

Excessive Spatter – scattering of molten metal particles that cool to solid form near weld bead.

S-0636

Possible Causes	Corrective Actions
Wire feed speed too high.	Select lower wire feed speed.
Voltage too high.	Select lower voltage range.
Electrode extension (stickout) too long.	Use shorter electrode extension (stickout).
Workpiece dirty.	Remove all grease, oil, moisture, rust, paint, undercoating, and dirt from work surface before welding.
Insufficient shielding gas at welding arc.	Increase flow of shielding gas at regulator/flowmeter and/or prevent drafts near welding arc.
Dirty welding wire.	Use clean, dry welding wire.
	Eliminate pickup of oil or lubricant on welding wire from feeder or liner.
Wrong polarity.	Configure polarity as shown in Section 4-5. Always read and follow wire manufacturer's recommended polarity, and see Section 4-4.

8-9. Troubleshooting – Porosity

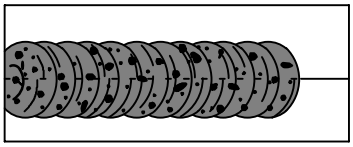

Porosity – small cavities or holes resulting from gas pockets in weld metal.

S-0635

Possible Causes	Corrective Actions
Insufficient shielding gas at welding arc.	Increase flow of shielding gas at regulator/flowmeter and/or prevent drafts near welding arc.
	Remove spatter from gun nozzle.
	Check gas hoses for leaks.
	Place nozzle 1/4 to 1/2 in (6-13 mm) from workpiece.
	Hold gun near bead at end of weld until molten metal solidifies.
Wrong gas.	Use welding grade shielding gas; change to different gas.
Dirty welding wire.	Use clean, dry welding wire.
	Eliminate pick up of oil or lubricant on welding wire from feeder or liner.
Workpiece dirty.	Remove all grease, oil, moisture, rust, paint, coatings, and dirt from work surface before welding.
	Use a more highly deoxidizing welding wire (contact supplier).
Welding wire extends too far out of nozzle.	Be sure welding wire extends not more than 1/2 in (13 mm) beyond nozzle.
Wrong polarity.	Configure polarity as shown in Section 4-5. Always read and follow wire manufacturer's recommended polarity, and see Section 4-4.

8-10. Troubleshooting – Excessive Penetration

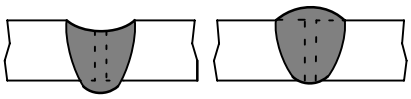

Excessive Penetration – weld metal melting through base metal and hanging underneath weld.

S-0639

Possible Causes	Corrective Actions
Excessive heat input.	Select lower voltage range and reduce wire feed speed.
	Increase travel speed.
Wrong polarity.	Configure polarity as shown in Section 4-5. Always read and follow wire manufacturer's recommended polarity, and see Section 4-4.

8-11. Troubleshooting – Lack Of Penetration

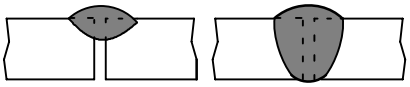

Lack Of Penetration – shallow fusion between weld metal and base metal.

S-0638

Possible Causes	Corrective Actions
Improper joint preparation.	Material too thick. Joint preparation and design must provide access to bottom of groove while maintaining proper welding wire extension and arc characteristics.
Improper weld technique.	Maintain normal gun angle of 0 to 15 degrees to achieve maximum penetration.
	Keep arc on leading edge of weld puddle.
	Be sure welding wire extends not more than 1/2 in (13 mm) beyond nozzle.
Insufficient heat input.	Select higher wire feed speed and/or select higher voltage range.
	Reduce travel speed.
Wrong polarity.	Configure polarity as shown in Section 4-5. Always read and follow wire manufacturer's recommended polarity, and see Section 4-4.

8-12. Troubleshooting – Incomplete Fusion

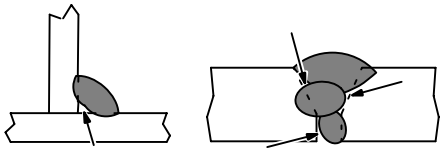

Incomplete Fusion – failure of weld metal to fuse completely with base metal or a preceeding weld bead.

S-0637

Possible Causes	Corrective Actions
Workpiece dirty.	Remove all grease, oil, moisture, rust, paint, undercoating, and dirt from work surface before welding.
Insufficient heat input.	Select higher voltage range and/or adjust wire feed speed.
Improper welding technique.	Place stringer bead in proper location(s) at joint during welding.
	Adjust work angle or widen groove to access bottom during welding.
	Momentarily hold arc on groove side walls when using weaving technique.
	Keep arc on leading edge of weld puddle.
	Use correct gun angle of 0 to 15 degrees.
Wrong polarity.	Configure polarity as shown in Section 4-5. Always read and follow wire manufacturer's recommended polarity, and see Section 4-4.

8-13. Troubleshooting – Burn-Through

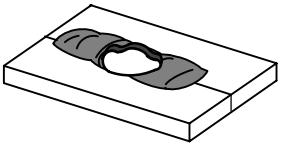

Burn-Through – weld metal melting completely through base metal resulting in holes where no metal remains.

S-0640

Possible Causes	Corrective Actions
Excessive heat input.	Select lower voltage range and reduce wire feed speed.
	Increase and/or maintain steady travel speed.
Wrong polarity.	Configure polarity as shown in Section 4-5. Always read and follow wire manufacturer's recommended polarity, and see Section 4-4.

8-14. Troubleshooting – Waviness Of Bead

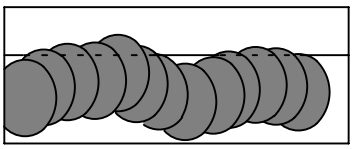

Waviness Of Bead – weld metal that is not parallel and does not cover joint formed by base metal.

S-0641

Possible Causes	Corrective Actions
Welding wire extends too far out of nozzle.	Be sure welding wire extends not more than 1/2 in (13 mm) beyond nozzle.
Unsteady hand.	Support hand on solid surface or use two hands.

8-15. Troubleshooting – Distortion

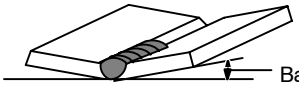

Distortion – contraction of weld metal during welding that forces base metal to move.

S-0642

Possible Causes	Corrective Actions
Excessive heat input.	Use restraint (clamp) to hold base metal in position.
	Make tack welds along joint before starting welding operation.
	Select lower voltage range and/or reduce wire feed speed.
	Increase travel speed.
	Weld in small segments and allow cooling between welds.

8-16. Common MIG Shielding Gases

This is a general chart for common gases and where they are used. Many different combinations (mixtures) of shielding gases have been developed over the years. The most commonly used shielding gases are listed in the following table.

Gas	Application			
	Spray Arc Steel	**Short Circuiting Steel**	**Short Circuiting Stainless Steel**	**Short Circuiting Aluminum**
Argon				All Positions
Argon + 25% CO_2	Flat & Horizontal[1] Fillet	All Positions	All Positions[2]	
CO_2	Flat & Horizontal[1] Fillet	All Positions		
Tri-Mix[3]			All Positions	

1 Globular Transfer

2 Single Pass Welding Only

3 90% HE + 7-1/2% AR + 2-1/2% CO_2

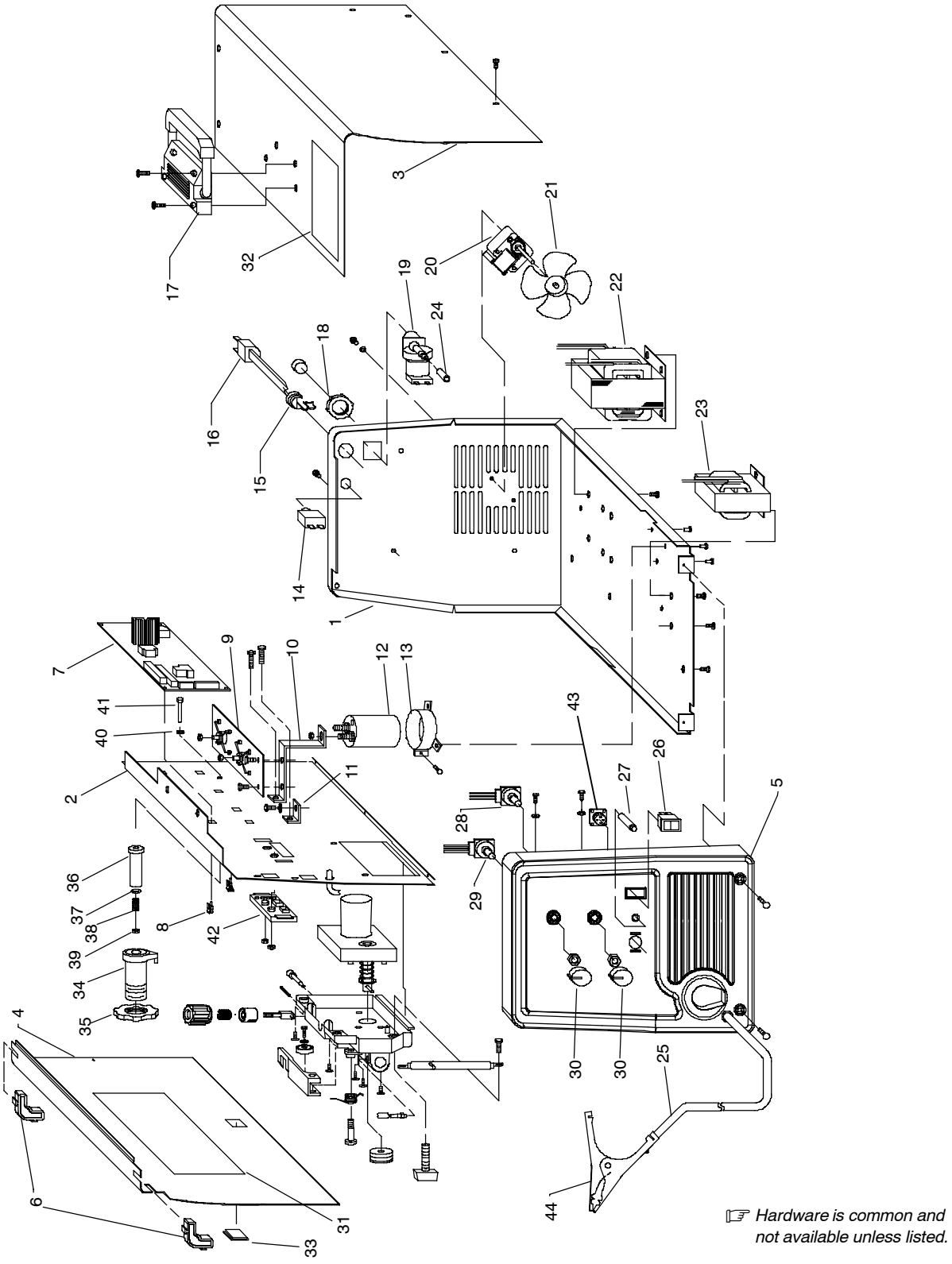

Figure 9-1. Main Assembly

Item No.	Dia. Mkgs.	Part No.	Description	Quantity
			Figure 9-1. Main Assembly	
1		202 581	BASE, lower	1
2		202 582	BAFFLE, center	1
3		202 583	WRAPPER, cover	1
4		202 584	DOOR, access	1
5		202 411	PANEL, front	1
		203 498	LABEL, control panel (115 VAC model)	1
		203 499	LABEL, control panel (230 VAC model)	1
6		202 412	HINGE, door	2
7	PC1	207 463	CIRCUIT CARD ASSY, control	1
7	PC1	207 466	CIRCUIT CARD ASSY, control	1
8		134 201	STAND-OFF support PC board	8
9	SK1	193 191	RECTIFIER ASSY (115 VAC model)	1
9	SK1	193 316	RECTIFIER ASSY (230 VAC model)	1
10		204 215	BUS BAR (positive)	1
11		193 194	BUS BAR (negative)	1
12	C1	193 039	CAPACITOR, elctlt 53,000 uf (115 VAC model)	1
12	C1	193 040	CAPACITOR, elctlt 100,000 uf (230 VAC model)	1
13		203 491	CLAMP, capacitor	1
14	CB1	210 109	SUPPLEMENTARY PROTECTOR, 25 amp	1
15		111 443	BUSHING, strain relief	1
16		147 545	CORD SET, 125V 5–15P 14GA 3/C 7ft SPT–3 jkt (115 VAC model)	1
16		152 118	CORD SET, 250V 6–50P 12GA 3/C 7ft SPT–3 jkt (230 VAC model)	1
17		208 015	HANDLE, carrying	1
18		137 761	NUT	1
19	GS1	216 397	VALVE, 2 way (115 VAC model)	1
19	GS1	216 398	VALVE, 2 way (230 VAC model)	1
20	FM	196 063	MOTOR, fan (115 VAC model)	1
20	FM	196 064	MOTOR, fan (230 VAC model)	1
21		409 953-001	BLADE, fan cooling	1
22	T1	203 445	TRANSFORMER (115 VAC model)	1
22	T1	203 456	TRANSFORMER (230 VAC model)	1
23	Z1	221 100	STABILIZER, 90A (115 VAC model)	1
23	Z1	221 102	STABILIZER, 130A (230 VAC model)	1
24		196 467	TUBING, pvc	1
25		196 619	WORK CABLE	1
26	S1	196 575	SWITCH, rocker SPST (115 VAC model)	1
26	S1	196 574	SWITCH, rocker DPDT (230 VAC model)	1
27	PL1	202 661	LED, yellow	1
28	R1	202 663	POTENTIOMETER, cp flat 1T .50W 50k	1
29	R2	207 415	POTENTIOMETER, cp flat 1T .50W 50k	1
30		207 078	KNOB, pointer	2

+When ordering a component originally displaying a precautionary label, the label should also be ordered.

To maintain the factory original performance of your equipment, use only Manufacturer's Suggested Replacement Parts. Model and serial number required when ordering parts from your local distributor.

Item No.	Dia. Mkgs.	Part No.	Description	Quantity
			Figure 9-1. Main Assembly (Continued)	
31		208 267	LABEL, weld guide (115 VAC model)	1
31		208 268	LABEL, weld guide (230 VAC model)	1
32		204 036	LABEL, precautionary static	1
33		204 711	LATCH, slide flush snap lock	1
34		211 339	HUB, spool	1
35		211 887	NUT, hub	1
36		202 726	ADAPTER, spool hub	1
37		203 072	WASHER, flat	1
38		225 257	SPRING, cprsn	1
39		204 608	NUT	1
40		602 211	WASHER, lock	1
41		203 071	SCREW	1
42	TE1	193 144	INSULATOR, output stud	1
43	RC1	048 282	RCPT W/SKTS (service kit)	1
44		208 820	CLAMP, work	1
		♦212 492	REGULATOR/FLOWMETER, 10-50 CFH CO_2	1
		♦144 108	HOSE, gas 5ft	1

♦OPTIONAL

+When ordering a component originally displaying a precautionary label, the label should also be ordered.

To maintain the factory original performance of your equipment, use only Manufacturer's Suggested Replacement Parts. Model and serial number required when ordering parts from your local distributor.

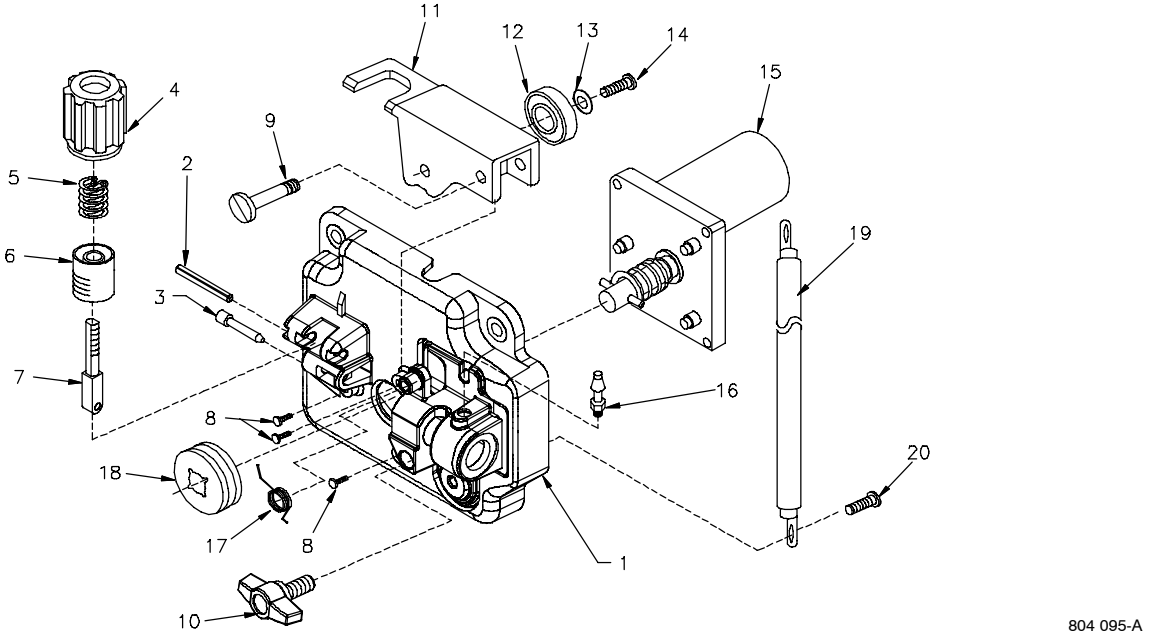

Figure 9-2. Wire Feed Drive Assembly

Item No.	Dia. Mkgs.	Part No.	Description	Quantity
		223 655	**Figure 9-2. Wire Feed Drive Assembly**	
1		202 500	HOUSING, plastic drive motor	1
2		203 424	PIN, spring	1
3		058 549	GUIDE, wire inlet	1
4		196 895	KNOB, tension	1
5		090 415	SPRING, compression	1
6		198 080	CUP, spring tension	1
7		085 242	FASTENER, pinned	1
8		197 172	SCREW, motor	3
9		203 567	SCREW,shld	1
10		222 035	KNOB, tee	1
11		203 301	LEVER, pressure	1
12		189 915	BEARING, ball	1
13		602 238	WASHER, flat	1
14		122 210	SCREW, 010-32 x 0.62	1
15	DM	202 708	MOTOR, gear	1
16		196 009	FITTING, gas	1
17		203 418	SPRING, torsion	1
18		220 179	ROLL, feed .024, .030/.035	1
19		203 667	CABLE	1
20		053 300	SCREW, 250-20 x 0.62	1
		225 717	DRIVE HEAD ASSY, w/o motor	1

+When ordering a component originally displaying a precautionary label, the label should also be ordered.

To maintain the factory original performance of your equipment, use only Manufacturer's Suggested Replacement Parts. Model and serial number required when ordering parts from your local distributor.

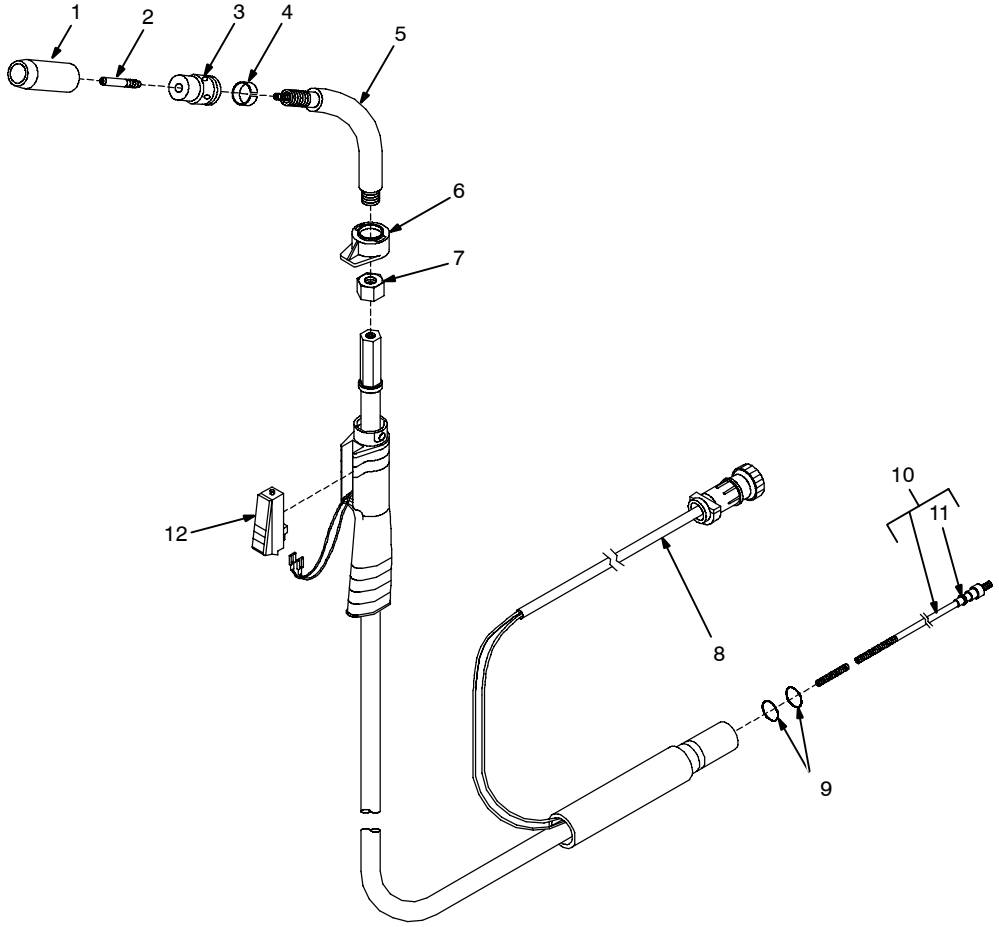

802 388-A

Figure 9-3. M-10 Gun

Item No.	Part No.	Description	Quantity
		Figure 9-3. M-10 Gun	
1	169 715	NOZZLE, slip type .500 orf flush	1
2	♦087 299	TIP, contact scr .023 wire x 1.125	
2	♦000 067	TIP, contact scr .030 wire x 1.125	
2	♦000 068	TIP, contact scr .035 wire x 1.125	
2	♦000 069	TIP, contact scr .045 wire x 1.125	
3	169 716	ADAPTER, contact tip	1
4	170 470	RING, retaining	1
5	169 718	TUBE, head	1
6	169 738	NUT, locking handle	1
7	169 719	NUT, jam	1
8	180 433	CORD, trigger assembly	1
9	079 974	O-RING, .500 ID x .103CS rbr	2
10	♦194 010	LINER, monocoil .023/.025 wire x 15ft (consisting of)	1
10	♦194 011	LINER, monocoil .030/.035 wire x 15ft (consisting of)	1
10	♦194 012	LINER, monocoil .035/.045 wire x 15ft (consisting of)	1
11	079 975	O-RING, .187 ID x .103CS rbr	1
12	196 255	SWITCH, trigger	1

♦OPTIONAL

To maintain the factory original performance of your equipment, use only Manufacturer's Suggested Replacement Parts. Model and serial number required when ordering parts from your local distributor.

9-4. Drive Rolls

For All Feed Head Assemblies	
PART NO.	**WIRE DIAMETER INCHES (mm)**
220 179	.024 (.6) and .030/.035 (.8 and .9) (Standard)
202 926	.030/.035 (.8 and .9) and .045 (1.2 VK Groove)

9-5. Options

PART NO.	DESCRIPTION	REMARKS
770 187	Running Gear/Cylinder Rack	For One Small Gas Cylinder, 100 lb (45 kg)
194 776	Small Running Gear/Cylinder Rack	For One Small Gas Cylinder, 75 lb (34 kg)
195 605	M-10 Replacement Gun	10 ft length/.030-.035 wire size

Notes

Warranty Questions?

Call
1-800-4-A-MILLER
for your local
Miller distributor.

Your distributor also gives you ...

Service
You always get the fast, reliable response you need. Most replacement parts can be in your hands in 24 hours.

Support
Need fast answers to the tough welding questions? Contact your distributor. The expertise of the distributor and Miller is there to help you, every step of the way.

TRUE BLUE® WARRANTY

Effective January 1, 2006
(Equipment with a serial number preface of “LG” or newer)

This limited warranty supersedes all previous Miller warranties and is exclusive with no other guarantees or warranties expressed or implied.

LIMITED WARRANTY – Subject to the terms and conditions below, Miller Electric Mfg. Co., Appleton, Wisconsin, warrants to its original retail purchaser that new Miller equipment sold after the effective date of this limited warranty is free of defects in material and workmanship at the time it is shipped by Miller. THIS WARRANTY IS EXPRESSLY IN LIEU OF ALL OTHER WARRANTIES, EXPRESS OR IMPLIED, INCLUDING THE WARRANTIES OF MERCHANTABILITY AND FITNESS.

Within the warranty periods listed below, Miller will repair or replace any warranted parts or components that fail due to such defects in material or workmanship. Miller must be notified in writing within thirty (30) days of such defect or failure, at which time Miller will provide instructions on the warranty claim procedures to be followed.

Miller shall honor warranty claims on warranted equipment listed below in the event of such a failure within the warranty time periods. All warranty time periods start on the date that the equipment was delivered to the original retail purchaser, or one year after the equipment is sent to a North American distributor or eighteen months after the equipment is sent to an International distributor.

1. 5 Years Parts — 3 Years Labor
   * Original main power rectifiers
2. 3 Years — Parts and Labor
   * Transformer/Rectifier Power Sources
   * Plasma Arc Cutting Power Sources
   * Process Controllers
   * Semi-Automatic and Automatic Wire Feeders
   * Inverter Power Sources (Unless Otherwise Stated)
   * Water Coolant Systems (Integrated)
   * Intellitig
   * Engine Driven Welding Generators
     (NOTE: Engines are warranted separately by the engine manufacturer.)
3. 1 Year — Parts and Labor Unless Specified
   * Motor Driven Guns (w/exception of Spoolmate Spoolguns)
   * Positioners and Controllers
   * Automatic Motion Devices
   * RFCS Foot Controls
   * Induction Heating Power Sources, Coolers, and Electronic Controls/Recorders
   * Water Coolant Systems (Non-Integrated)
   * Flowgauge and Flowmeter Regulators (No Labor)
   * HF Units
   * Grids
   * Spot Welders
   * Load Banks
   * Arc Stud Power Sources & Arc Stud Guns
   * Racks
   * Running Gear/Trailers
   * Plasma Cutting Torches (except APT & SAF Models)
   * Field Options
     (NOTE: Field options are covered under True Blue® for the remaining warranty period of the product they are installed in, or for a minimum of one year — whichever is greater.)
   * Bernard-Branded Mig Guns (No Labor)
   * Weldcraft-Branded TIG Torches (No Labor)
   * Subarc Wire Drive Assemblies
4. 6 Months — Batteries
5. 90 Days — Parts
   * MIG Guns/TIG Torches and Subarc (SAW) Guns
   * Induction Heating Coils and Blankets, Cables, and Non-Electronic Controls
   * APT & SAF Model Plasma Cutting Torches
   * Remote Controls
   * Accessory (Kits)
   * Replacement Parts (No labor)
   * Spoolmate Spoolguns
   * Canvas Covers

Miller’s True Blue® Limited Warranty shall not apply to:

1. **Consumable components; such as contact tips, cutting nozzles, contactors, brushes, slip rings, relays or parts that fail due to normal wear. (Exception: brushes, slip rings, and relays are covered on Bobcat, Trailblazer, and Legend models.)**
2. Items furnished by Miller, but manufactured by others, such as engines or trade accessories. These items are covered by the manufacturer’s warranty, if any.
3. Equipment that has been modified by any party other than Miller, or equipment that has been improperly installed, improperly operated or misused based upon industry standards, or equipment which has not had reasonable and necessary maintenance, or equipment which has been used for operation outside of the specifications for the equipment.

MILLER PRODUCTS ARE INTENDED FOR PURCHASE AND USE BY COMMERCIAL/INDUSTRIAL USERS AND PERSONS TRAINED AND EXPERIENCED IN THE USE AND MAINTENANCE OF WELDING EQUIPMENT.

In the event of a warranty claim covered by this warranty, the exclusive remedies shall be, at Miller’s option: (1) repair; or (2) replacement; or, where authorized in writing by Miller in appropriate cases, (3) the reasonable cost of repair or replacement at an authorized Miller service station; or (4) payment of or credit for the purchase price (less reasonable depreciation based upon actual use) upon return of the goods at customer’s risk and expense. Miller’s option of repair or replacement will be F.O.B., Factory at Appleton, Wisconsin, or F.O.B. at a Miller authorized service facility as determined by Miller. Therefore no compensation or reimbursement for transportation costs of any kind will be allowed.

TO THE EXTENT PERMITTED BY LAW, THE REMEDIES PROVIDED HEREIN ARE THE SOLE AND EXCLUSIVE REMEDIES. IN NO EVENT SHALL MILLER BE LIABLE FOR DIRECT, INDIRECT, SPECIAL, INCIDENTAL OR CONSEQUENTIAL DAMAGES (INCLUDING LOSS OF PROFIT), WHETHER BASED ON CONTRACT, TORT OR ANY OTHER LEGAL THEORY.

ANY EXPRESS WARRANTY NOT PROVIDED HEREIN AND ANY IMPLIED WARRANTY, GUARANTY OR REPRESENTATION AS TO PERFORMANCE, AND ANY REMEDY FOR BREACH OF CONTRACT TORT OR ANY OTHER LEGAL THEORY WHICH, BUT FOR THIS PROVISION, MIGHT ARISE BY IMPLICATION, OPERATION OF LAW, CUSTOM OF TRADE OR COURSE OF DEALING, INCLUDING ANY IMPLIED WARRANTY OF MERCHANTABILITY OR FITNESS FOR PARTICULAR PURPOSE, WITH RESPECT TO ANY AND ALL EQUIPMENT FURNISHED BY MILLER IS EXCLUDED AND DISCLAIMED BY MILLER.

Some states in the U.S.A. do not allow limitations of how long an implied warranty lasts, or the exclusion of incidental, indirect, special or consequential damages, so the above limitation or exclusion may not apply to you. This warranty provides specific legal rights, and other rights may be available, but may vary from state to state.

In Canada, legislation in some provinces provides for certain additional warranties or remedies other than as stated herein, and to the extent that they may not be waived, the limitations and exclusions set out above may not apply. This Limited Warranty provides specific legal rights, and other rights may be available, but may vary from province to province.

Owner's Record

Please complete and retain with your personal records.

Model Name Serial/Style Number

Purchase Date (Date which equipment was delivered to original customer.)

Distributor

Address

City

State Zip

For Service

Contact a DISTRIBUTOR or SERVICE AGENCY near you.

Always provide Model Name and Serial/Style Number.

Contact your Distributor for:	Welding Supplies and Consumables Options and Accessories Personal Safety Equipment Service and Repair Replacement Parts Training (Schools, Videos, Books) Technical Manuals (Servicing Information and Parts) Circuit Diagrams Welding Process Handbooks To locate a Distributor or Service Agency visit www.millerwelds.com or call 1-800-4-A-Miller
Contact the Delivering Carrier to:	File a claim for loss or damage during shipment. For assistance in filing or settling claims, contact your distributor and/or equipment manufacturer's Transportation Department.

Miller Electric Mfg. Co.
An Illinois Tool Works Company
1635 West Spencer Street
Appleton, WI 54914 USA

International Headquarters–USA
USA Phone: 920-735-4505 Auto-Attended
USA & Canada FAX: 920-735-4134
International FAX: 920-735-4125

European Headquarters – United Kingdom
Phone: 44 (0) 1204-593493
FAX: 44 (0) 1204-598066

www.MillerWelds.com

PRINTED IN USA

© 2006 Miller Electric Mfg. Co. 2006–01